股票代码 603915

GUOMAO
国茂股份

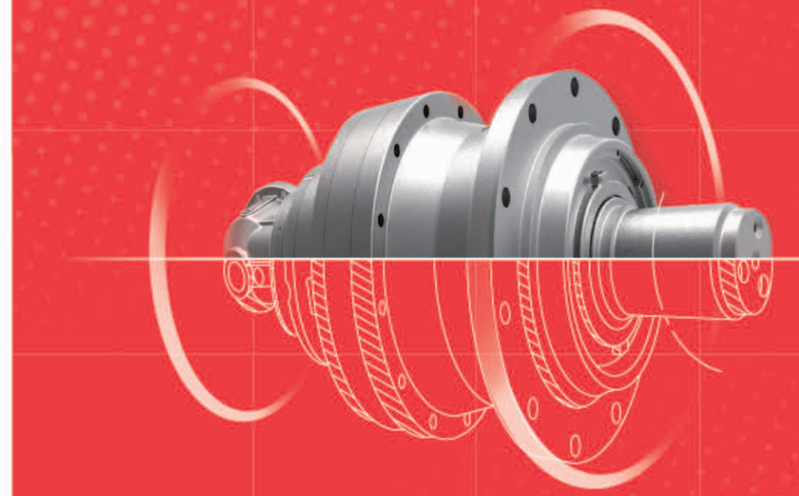

传动精品 传递真情

GTN系列 通用型驱动

GTN Series Planetary Gear Reducer

GUOMAO
国茂股份

sales@guomaoreducer.com
400-112-5588
中国江苏省常州市武进高新园区龙潜路98号
www.guomaoreducer.com

江苏国茂减速机股份有限公司版权所有，未经许可前，禁止复制或使用文本任何部分
Without the express approval of limited are not allowed to alter or use manual pictures and layout

传动精品 传递真情

产品样本 NO.014
版　　本 V1.0-2023

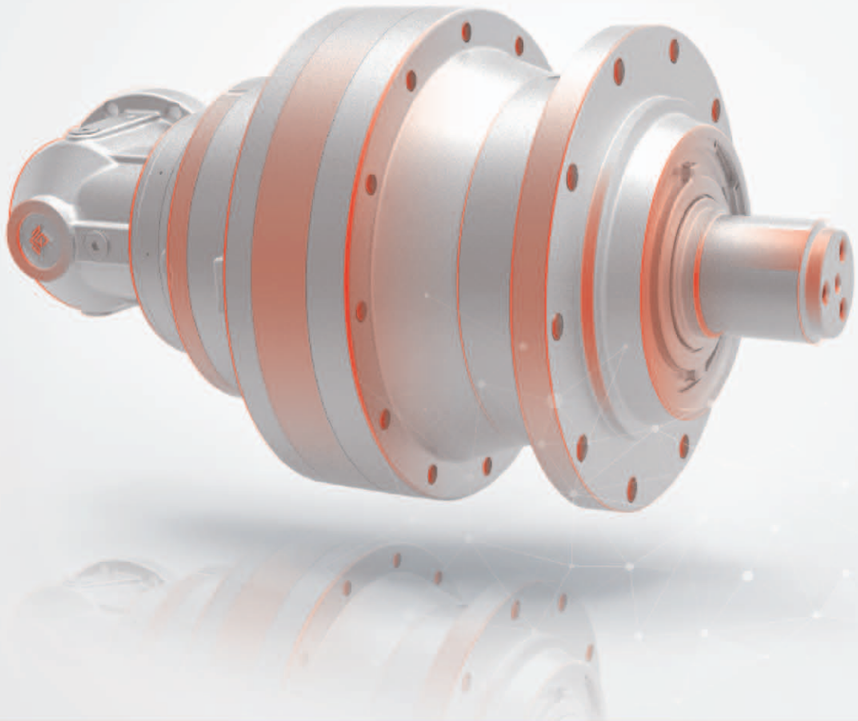

GTN Series Planetary Gear Reducer

GTN系列 通用型驱动

目录
Contents

概述 GENERAL INFORMATION

1.0 规格 / Specifications 1
2.0 结构形式 / Configurations 1
3.0 符号及计量单位 / Symbols and units of measure 2
4.0 输出转矩 / Output torque 4
5.0 功率 / Power 4
6.0 热功率 / Thermal capacity 5
7.0 效率 / Efficiency 7
8.0 传动比 / Gear ratio 7
9.0 工作转速 / Operating speed 7
10.0 使用系数 / Service factor 8
11.0 安全系数 / Safety factor 8
12.0 选型 / Product selection 8
13.0 校核 / Verifications 12
14.0 选择电机 / Selecting the motor 15
15.0 安装 / Installation 16
16.0 维护 / Maintenance 18
17.0 存放 / Storage 18
18.0 供货条件 / Supply conditions 18

GTN 系列模块化行星减速机 SERIES GTN MODULAR PLANETARY GEARBOXES

19.0 命名说明 / Designation 19
20.0 安装位置 / mountion position 21
21.0 润滑 / lubrication 23

1.0 规格

GTN00 系列包含了一组多功能的行星减速机

主要特点：
· 18 种机座号　模块化设计
- 型式：
  - 同轴式 1 至 4 级减速
  - 直角轴式 2 至 4 级减速（第一级为螺旋伞齿轮）

· 法兰、地脚和轴装布局

· 平键输出轴、花键输出轴、花键空心轴、带收缩盘空心轴

· 输入连接方式：
  - IEC 标准电机
  - 机座号为 GTN07 以下的同轴式减速机可采用整体式电机

· 平行输入轴
· 减速电机
· 安装附件：
  - 法兰
  - 小齿轮
  - 花键轴
  - 收缩盘

1.0 SPECIFICATIONS

The GTN00 series consists of a range of multi-purpose planetary gearboxes.
Key features are:
· 18 frame sizes of modular design
· versions:
  - in-line with 1 to 4 reductions
  - right angle (spiral bevel gear set into first stage) with 2 to 4 reductions

· flange, foot and shaft mounting arrangements

· keyedoutput shaft, splined male shaft, splined hollow shaft, hol-low shaft with shrink disc

· input adaptors for:
  - IEC-normalised electric motors
  - integral motor for in-line units up to size GTN07

· parallel input shafts
· gearmotors
· mounting accessories:
  - flanges
  - pinions
  - splined bars
  - shrink discs

2.0 结构形式

2.0 CONFIGURATIONS

结构形式 Configuration	功率 Power	转矩 Torque	减速比 Ratios	效率 Efficiency	噪音 Noise level
 同轴式 In line	$0.25 \le P_n$ [kW] ≤ 20	$M_n \le 520000$Nm	$3.4 \le i \le 290$	高 High	中 Medium
 直角轴式 Right-angle	$0.25 \le P_n$ [kW] ≤ 7	$M_n \le 400000$Nm	$7 \le i \le 95$	高 High	中 Medium

更多设计特征：

- 可选转矩种类繁多
- HS 和 HK 型中使用了重型圆锥滚子轴承，能够承受很高的悬臂载荷和径向载荷
- 高效率
- 内部零件使用花键连接而非平键连接
- 行星轮安装在自定心装置上，确保每个齿轮承受相同负载
- 球墨铸铁箱体

More design features:

- high torque density
- high overhung and axial load capacity due to heavy duty tapered roller bearings featured on H and P versions
- high efficiency
- inner parts are coupled through splined connections rather than keys
- planetary gears mounted onto self-centering carriers to ensure the most even load distribution among planetary gears
- housing from ductile cast iron.

3.0 符号及计量单位 3.0 SYMBOLS AND UNITS OF MEASURE

符号 Simb.		说明	Description
A_{c2}	[N]	减速机输出轴计算用轴向力	Calculated thrust load at gearbox output shaft
A_{r2}	[N]	减速机输出轴轴向力	Thrust load at gearbox output shaft
A_{n2}	[N]	减速机输出轴额定轴向力	Rated thrust load at gearbox output shaft
f_{a2}		轴向负载系数	Thrust load factor
f_L		寿命系数	Lifetime factor
f_m		调节系数	Adjusting factor
f_{n1},f_{n2}		输入和输出轴转速系数	Speed factor referred to input and output shaft loading
f_s		使用系数	Service factor
f_t		热功率系数	Thermal factor
f_{x1},f_{x2}		输入和输出轴上径向载荷位置系数	Load location factor for radial loading on input and output shaft
h	[N]	寿命小时数	Lifetime in hours
I		传动比，速比	Gear ratio
K_a		轴向载荷系数	Axial load duty factor
K_f		径向载荷系数	Radial load factor
I		循环周期系数	Intermittence factor
Mb	[Nm]	额定制动转矩	Rated brake torque
M_{c2}	[Nm]	计算用输出转矩	Calculated output torque
M_2		传送至输出轴的转矩	Torque delivered to output shaft
M_{n2}	[Nm]	减速机额定输出转矩	Gearbox rated output torque
M_{2max}	[Nm]	减速机最大输出转矩	Gearbox max. output torque
M_{r1}	[Nm]	输入轴所需转矩	Required torque at input shaft
M_{r2}	[Nm]	输出轴所需转矩	Required torque at output shaft
n_1	[min^{-1}]	输入轴转速	Speed of input shaft
n_2	[min^{-1}]	输出轴转速	Speed of output shaft
P_1	[kW]	最大输入功率	Max. power that can be applied to input shaft
P_2	[kW]	输出功率	Power delivered to output shaft
P_n	[kW]	电机额定功率	Motor rated power
P_1	[kW]	所需输入功率	Required input power
P_{r2}	[kW]	最大输出转速时的输出功率	Output power at n_2 max
P_s	[kW]	损耗功率	Power to be dissipated
P_t	[kW]	减速机热功率	Gearbox thermal capacity
R_{c1}	[N]	输入轴计算用径向载荷	Calculated radial load at gearbox input shaft
R_{c2}	[N]	输出轴计算用径向载荷	Calculated radial load at gearbox output shaft
R_{n1},R_{n2}	[N]	输入和输出轴中点额定径向载荷	Rated radial load at shaft mid-point, input and output
R_{x2}	[N]	轴中间点容许悬臂载荷	Admissible overhung load for forces applying off the shaft midpoint
S		安全系数	Safety factor
t_a	[℃]	环境温度	Ambient temperature
X	[mm]	悬臂载荷的作用距离	Load application distance from shaft shoulder
η_d		动态效率	Dynamic efficiency
Z		每小时启动次数	Starts per hour

	该符号表示重量	Icon symbolizes the weight.
	带该符号的栏表示安装图纸页可分类	Columns marked with this symbol indicate the page installation drawings can be sorted from.
	该符号表示提供所需信息的页码	This symbol identifies the page the information is available at.
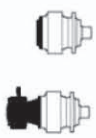	黑色区域表示输入部件	Areas marked in black show the input component parts.
	扳手下方的数字表示额定拧紧力矩	The number associated with the wrench indicates the rated tightening torque.
	同轴式减速机	In-line unit.
	直角轴式减速机	Right-angle unit.

4.0 输出转矩

4.1 减速电机传递的转矩 M_2[Nm]

指在理论寿命为 10000 小时、装机功率 Pn、安全系数 S 条件下减速机传递的有效输出转矩。该转矩值已考虑减速机效率。

4.2 定输出转矩 M_{n2} [Nm]

指减速机安全传递的转矩，条件为：

- 均匀负载，安全系数 S=1
- 理论寿命为 10000 小时

Mn2 值符合以下标准：

ISO DP 6336 齿轮标准

ISO 281 轴承标准

4.3 最大转矩 M_{2max} [Nm]

指减速机在静态条件或高起停运转条件下所能承受的输出转矩。通常是指峰值负载或启动负载。

4.4 实际所需转矩 M_{r2} [Nm]

所需转矩取决于应用场合的实际工况。拟选减速机的额定转矩 M_{n2} 必须大于这个转矩。

4.5 计算用转矩 M_{c2} [Nm]

计算用转矩会在选择减速机时被用到，可以由实际所需转矩 M_{r2} 和使用系数 f_S 按以下公式得出：

4.0 OUTPUT TORQUE

4.1 Gearmotor delivered torque M_2[Nm]

This is the net torque delivered to the output shaft, with in-stalled power Pn, safety factor S, which will yield a theoretical lifetime of 10000hours.This torque value takes gearbox efficiency into consideration.

4.2 Rated output torque M_{n2}[Nm]

This is the torque output the gearbox can deliver safely, based on:

- uniform loading and safety factor S=1
- 10000 hours theoretical lifetime Mn2 values are in compliance with following standards:

ISO DP 6336 for gears

ISO 281 for bearings.

4.3 Maximum torque M_{2max}[Nm]

The output torque the gear unit will withstand in a static condition or a highly intermittent operation.It is generally meant as a momentary peak load or starting-up torque under load.

4.4 Required torque M_{r2}[Nm]

The torque drawn by the application.

It must always be equal to or less than rated output torque M_{n2} for the gearbox under study.

4.5 Calculated torque M_{c2}[Nm]

Computational torque value to be used when selecting the gearbox,

considering required torque M_{r2} and service factor f_S

It is obtained through the equation:

$$M_{c2} = M_{r2} \times f_s \leq M_{n2} \quad (1)$$

5.0 功率

5.1 额定输入功率 Pn1[KW]

P_{n1} 是指减速机可使用的最大安全输入功率：

- 输入转速为 n1
- 安全系数 S=1
- 理论寿命为 10000 小时

5.0 POWER

5.1 Rated input power P_{n1}[kW]

P_{n1} is the maximum power that can be safely applied to the gearbox when the same is operated:

- at a n1 drive speed
- under a safety factor S=1
- yielding a theoretical lifetime of 10000 hours.

5.2 输出功率 P2[kW]

输出功率是指传递到输出轴的有效功率。

可按以下公式得出：

5.2 Output power P_2 [kW]

This value is the net power de-livered to the output shaft.

It can be calculated through the following formulas:

$$P_2 = P_1 \times \eta_d \quad (2)$$

$$P_2 = \frac{M_{r2} \times n_2}{9550} \quad (3)$$

A3 表格中列出了效率值。

Efficiency values are listed in table (A3).

6.0 热功率 P_t [kW]

该参数与减速机发热限值相关。

具体数值在减速机额定值表中列出。该参数表示在输入转速 n_1、环境温度为 20℃、润滑剂温度不超过 85-90℃、减速机温度不超过75-80℃且不带附加冷却系统的条件下，减速机能持续传递的功率。

在工作时间较短和长时间停止的工况中，如果减速机的温度在停止时间内能完全冷却，则热功率将不再有意义，在计算时可忽略不计。如果环境温不是 20℃和 / 或间歇工作时，热功率 Pt 应根据表（A1）中的热功率系数 ft 进行调整。

确保总是满足以下条件：

6.0 THERMAL CAPACITY P_t [kW]

This parameter is linked to the gearbox thermal limit. Values for the thermal capacity are listed within the rating charts
of gearboxes and gearmotors and represent the mechanical
power that can be transmitted continuously at an input speed
n_1 and at an ambient temperature of 20°C, without the lubricant exceeding the temperature of 85-90°C and the gear case the temperature of 75-80°C, without the use a supplementary
cooling system.
When the duty cycle is formed by short operating periods and rest time is long enough for the unit to cool down, the thermal capacity is hardly significant and it may be omitted from calculation. Should the ambient temperature be different from 20°C and/or duty be intermittent, the thermal capacity P_t is to be adjusted through thermal factor f_t as listed in table (A1). Finally, make sure that the following condition is always satisfied:

$$P_{r1} \leq P_t \times f_t \quad (4)$$

（A1）

f_t					
t_a [℃]	连续工作制 Continuous duty	间歇工作制 Intermittent duty 循环持续系数 Cyclic duration factor			
		80%	60%	40%	20%
10	1.2	1.3	1.6	1.8	2.0
20	1.0	1.1	1.3	1.5	1.7
30	0.9	1.0	1.2	1.3	1.5
40	0.7	0.8	0.9	1.0	1.2
50	0.5	0.6	0.7	0.8	0.9

循环持续时间系数是指处于工作负荷下的工作时间t_f 与周期时间（t_f+t_r，其中 t_r表示停止时间 ）的比，并以百分数表示。

Cyclic duration factor is the relationship of operating time under load tf to total cycle time ($t_f + t_r$, where t_r stands for time at rest), expressed as a percentage.

$$I = \frac{t_f}{t_f + t_r} \times 100 \qquad (5)$$

如果常规配置中减速机的热功率不足且不能满足（4 ）中的条件，推荐使用带冷却风扇的输入轴-订购代码 SV--。相关热功率在以下表格中列出。

Should the gear unit in the conventional configuration fall short of thermal capacity and not verify the condition (4) above, it is recommended that the fan cooled input shaft-ordering code FV_ _ is specified instead. The relevant thermal capacity is listed in the charts here after.

(A2)

Thermal capacity 热功率
Pt [kW] @ n_1= 1450 rpm

		SV05B	SV06B	SV07A	SV07B	SV010B	SV011B
GTN03	L1	29	-	-	-	-	-
GTN04	L1	30	-	-	-	-	-
GTN05	L1	31	-	-	-	-	-
GTN06	L1	-	45	-	-	-	-
	L2	31	-	-	-	-	-
GTN07	L1	-	-	49	49	-	-
	L2	36	-	-	-	-	-
GTN09	L1	-	-	52	52	-	-
	L2	36	-	-	-	-	-
GTN10	L1	-	-	-	-	62	-
	L2	-	49	-	-	-	-
	L3	36	-	-	-	-	-
GTN11	L1	-	-	-	-	-	62(*)
	L2	-	-	53	53	-	-
	L3	36	-	-	-	-	-
GTN13	L1	-	-	-	-	-	-
	L2	-	-	57	57	-	-
	L3	36	-	-	-	-	-
GTN14	L2	-	-	-	-	67	-
	L3	-	52	-	-	-	-
	L4	33	-	-	-	-	-
GTN15	L2	-	-	-	-	-	72(*)
	L3	-	-	57	57	-	-
	L4	36	-	-	-	-	-
GTN16	L2	-	-	-	-	-	72(*)
	L3	-	-	57	57	-	-
	L4	36	-	-	-	-	-
GTN17	L2	-	-	-	-	-	77(*)
	L3	-	-	62	62	-	-
	L4	36	-	-	-	-	-
GTN18	L3	-	-	-	-	-	62(*)
	L4	-	-	45	45	-	-
GTN19	L3	-	-	-	-	-	77(*)
	L4	-	-	57	57	-	-
GTN21	L3	-	-	-	-	-	87(*)
	L4	-	-	62	62	-	-

Thermal capacity 热功率
Pt [kW] @ n_1= 1450 rpm

		SV05B	SV06B
GTN07	R2	52	-
GTN09	R2	52	-
GTN10	R2 (B)	-	82
	R2 (C)	-	82
GTN11	R2 (B) ;	-	102
	R2 (C)	-	117
	R3	58	-
GTN13	R2 (B)	-	102
	R2(C)	-	117
	R3	58	-
GTN14	R3 (B)	-	82
	R3(C)	-	82
	R4	38	-
GTN15	R3 (B)	-	102
	R3 (C)	-	117
	R4	58	-
GTN16	R3 (B)	-	102
	R3 (C)	-	117
	R4	63	-
GTN17	R3 (B)	-	117
	R3 (C)	-	127
	R4	68	-
GTN18	R4 (B)	-	108
	R4 (C)	-	137
GTN19	R4 (B)	-	122
	R4 (C)	-	142
GTN21	R4 (B)	-	132
	R4 (C)	-	152

*@n_1=1150 rpm

7.0 效率

7.1 动态效率

该参数是指传送至输出轴的有效功率 P_2 和输入轴的功率 P_1 之间的比：

$$\eta_d = \frac{P_2}{P_1} \quad (6)$$

具体效率值如下表所示。

（A3）

减速级数 No. of reductions	结构形式 Configuration	
	行星结构 Planetary	直角式减速机组合 Combined with right-angle unit
1	0.97	—
2	0.94	—
3	0.91	0.91
4	0.88	—

8.0 传动比« i »

传动比是指输入轴转速与输出轴转速的比值

$$i = \frac{n_1}{n_2} \quad (7)$$

9.0 工作转速

9.1 输入转速 n_1 [min^{-1}]

减速机驱动速度。

如果减速机与电机直接相连，则转速值与电机转速相等。

如果减速机由外部传动装置驱动，输入转速为电机转速经外部驱动装置的减速后的转速。在这种情况下，输入转速应低于1400转每分钟。

输入转速不得超过减速机额定值表中规定的数值。

9.2 输出转速 n_2 [min^{-1}]

输出转速通过输入转速 $\mathbf{n_1}$ 和传动比 **i** 按照下列公式计算得出：

$$n_2 = \frac{n_1}{i} \quad (8)$$

7.0 EFFICIENCY

7.1 Dynamic efficiency [η_d]

The parameter is defined as the relationship of the net power delivered to the output shaft P_2 to the power applied to the input shaft P_1:

$$\eta_d = \frac{P_2}{P_1} \quad (6)$$

Indicative values for the efficiency are listed in the chart here after.

8.0 GEAR RATIO « i »

It is defined as the relationship of the speed the input shaft is driven at and the speed delivered at the output shaft of a gearbox.

$$i = \frac{n_1}{n_2} \quad (7)$$

9.0 OPERATING SPEED

9.1 Input speed n_1 [min^{-1}]

The speed the gearbox is driven at.

The value is coincident with the motor speed if this is directly connected to the gearbox.

In case the gearbox is driven through an external transmission, the gearbox input speed is the speed of the motor divided by the reduction of the external transmission.

In this case, it is recommended that the input speed be lower than 1400 min^{-1}.

Input speed should never exceed the value listed in the gearbox rating chart.

9.2 Output speed n_2 [min^{-1}]

It is calculated from drive speed n_1 and gear ratio i, as per the following equation:

$$n_2 = \frac{n_1}{i} \quad (8)$$

10.0 使用系数 [f_S]

表示应用强度特性的参数。尽管是近似计算，该系数考虑到了减速机负载类型、工作制和每日工作时间。
可参照表格（A4）选取合适的使用系数。

10.0 SERVICE FACTOR [f_S]

A parameter representing the severity of the application. This factor takes into account, although approximately, the type of load the gearbox operates with, the specific duty as well as the operating daily hours.
The table (A4) is of reference when determining the appropriate service factor.

(A4)

使用系数《f_S》 Service factor						
负载类型 Type of load	每小时启动次数 Number of starts/hour Z	总运行时间 Total operating hours(h)				
		≤5000	10000	15000	25000	50000
		每日运行时间 Daily operating hours(h)				
		h<4	4<h<8	8<h<12	12<h<16	16<h<24
均匀负载 Uniform load	Z<10	0.90	1.00	1.15	1.30	1.60
	10<Z<30	0.95	1.15	1.30	1.50	1.80
	30<Z<100	1.00	1.25	1.45	1.60	2.00
中等负载 Moderate shock load	Z<10	1.00	1.25	1.45	1.60	2.00
	10<Z<30	1.10	1.40	1.60	1.80	2.20
	30<Z<100	1.20	1.50	1.70	2.00	2.40
重负载 Heavy shock load	Z<10	1.20	1.50	1.70	2.00	2.40
	10<Z<30	1.30	1.60	1.80	2.10	2.60
	30<Z<100	1.40	1.75	2.00	2.30	2.80

11.0 安全系数 [S]

安全系数等于减速机额定功率与电机实际功率的比值

11.0 SAFETY FACTOR [S]

This is the relationship of the gear unit rated power to the power of the electric motor actually driving the unit.

$$S = \frac{P_{n1}}{P_1} \quad (9)$$

12.0 选型

表格（A5）中列出了选择减速机或减速电机时所需的主要参数。
表格正确填写后可发送至我们的技术服务部，从而帮助客户根据特定
应用选择最合适的传动产品。

12.0 PRODUCT SELECTION

The key parameters that are necessary when selecting gearbox, or a gearmotor, are listed in table (A5).
The form, duly filled in, can be forwarded to our Technical Service which will assist the Customer in selecting the most suitable drive for the specific application.

(A5)

应用类型 Type of application

减速机 GEARBOX

P_{r2}	所需输出功率 Required output power	.....kW
M_{r2}	所需输出转矩 Required output torque	.....Nm
n_2	输出转速 Output speed	.....min^{-1}
n_1	输入转速 Input speed	.....min^{-1}
R_2	输出轴径向载荷 Radial load on output shaft	..... N
X_2	载荷作用点距离 Load application distance	.....mm (*)
R_1	输入轴径向载荷 Radial load on input shaft	.....N
X_1	载荷作用点距离 Load application distance	.....mm (*)
A_2	输出轴轴向载荷 Thrust load on output shaft	.....N (·)
A_1	输入轴轴向载荷 Thrust load on input shaft	.....N (·)
h	要求使用寿命 Requested life time	.....h
t_a	环境温度 Ambient temperature	.....℃

电机 ELECTRIC MOTOR

	IEC 规格 IEC size	.....
P_n	额定功率 Rated power	.....kW
	电机电压 Motor voltage	V
	极数 Number of poles	.....kW
	频率 Frequency	.....Hz
	IEC 电机工作制类型 Duty type to IEC norms	S..../.....%
Z	每小时起动数 Starts per hour	..... 1/h
	电机保护等级 Motor protection degree	IP.....
	绝缘等级 Insulation class	.....

电机内置制动器 (如安装)
MOTOR IN-BUILT BRAKE (IF FITTED)

	制动电压 Brake voltage	V
M_b	制动转矩 Brake torque	.....Nm

类型 Type □ 同轴式 In line □ 直角轴式 Right angle

输出型式
Output version .....

附件
Accessories .....

安装位置
Mounting position .....

N.B : Table (A4)
(*) Dimension X_{1-2} is the distance between the point the force applies and the shaft shoulder(if not specified a force applying at mid-point of the shaft will be assumed).

(*) +=push
−=pull

注意 : 表格(A4)
(*) 尺寸 X_{1-2} 为受力点和轴肩之间的距离 (如未规定，则假设为中点受力) .

(*) +=压
−=拉

注意：
本目录中所列的选择标准和规格并不适用于所有应用，其中包括那些减速机必须能够安全运行以避免对人员或物体造成伤害的工况，如起重设备中。
在这些应用中，减速机应根据适用的安全规范和特定标准进行选择。

NOTE:
The selection criteria and specifications reported in this catalogue are not valid for every and each application, including those where the gearbox operates as a safety device preventing in- jury to persons or damage to objects, as is the case with hoisting equipment.
For these applications, the gearbox should be selected according to specific criteria and in compliance with the applicable safety regulations.

12.1 减速电机选型
需事先考虑并确定应用参数：
a) 根据负载类型、每小时启动次数和预期使用寿命（表格 A4）确定使用系数 f_S；

12.1 Selecting a gearmotor
Consider the specific application and establish on beforehand:
a) service factor fs according to type of load, number of starts per hour and expected lifetime (tab. A4.);

b) 所需功率

b) Required drive power:

$$P_{r1} = \frac{M_{r2} \times n_2}{9550 \times \eta_d} \quad (10)$$

表格（A3）列出了不同型号减速机的效率值η_d

Table (A3) lists the indicative values of efficiency η_d for the different types of gearboxes.

c) 得出所需功率 $\mathbf{P_{r1}}$ 和输出转速 $\mathbf{n_2}$后，查阅齿轮减速机额定值表，
选择合适的额定功率满足 $\mathbf{P_n}$ 大于或等于 $\mathbf{P_{r1}}$：

c) After required power P_{r1} and output speed n_2 are known, locate the gearmotor rating charts and select the one relevant to normalized power P_n equal to or greater than Pr:

$$P_n \geq P_{r1} \quad (11)$$

除非另有说明，否则电机额定值表中所列的功率 P_n 为连续工作制 S1时的电机功率。
对于非连续工作制S1条件下使用的电机，根据 CEI2-3/IEC 60034-1标准确定所需的负载类型。
对于从S2到S8的工作制，特别是对于机座号不超过132的电机，能获得相对于连续工作制的情况时更大的功率。
相应地必须满足下列条件:

Unless otherwise specified, power P_n listed in the motor rating chart refers to continuous duty S1.
For motors operating in conditions other than S1, determine type of duty according to CEI2-3/IEC 60034-1 standards.
Note that for duty cycles from S2 to S8 and motor frame sizes up to 132 included, power may be upgraded over that specified for continuous duty.
In this event, the condition to be verified is the following:

$$P_n = \frac{P_{r1}}{f_m} \quad (12)$$

整系数 f_m 能从表格（A6）中查到。

The adjusting factor f_m can be obtained from table (A6).

(A6)

	工作制 DUTY CYCLE						
	S2			S3*			S4-S8
	循环周期 Cycle time			循环周期系数 Cyclic duration rate I			请与我们联系 Contact us
	10	30	60	25%	40%	60%	
f_m	1.35	1.15	1.05	1.25	1.15	1.1	

*循环周期必须小于等于1 0 分钟。否则，请与我们的技术服务部进行联系。

* Cycle time must be equal to or less than 10 minutes. Should this not be the case contact our Technical Service for assistance.

循环周期系数：见表 (A5)

Cyclic duration rate: see formula (5).

根据输出转速n_2或接近的转速，选择合适的减速电机使安全系数S
满足以下条件：

For the output speed n_2, or closest to, select the gearmotor that yields a safety factor S meeting the following condition:

$$S \geq f_s \quad (13)$$

在GTN00 至GTN07的LP配置的单级减速机与大型、沉重的电机组合时可能导致减速机理论寿命下降。

The combination of large, heavy weight, motors with single reduction units of sizes GTN00 to GTN07 in the FP configuration, may result into a reduced theoretical lifetime for the gearbox.

12.2 减速机选型
检查具体应用并确定：

a) 根据负载类型、每小时启动次数和所需使用寿命 (表格 A4) 确定使用系数f_S
b) 根据所需输出转矩M_{r2}按照以下公式得出计算用转矩：

12.2 Selecting a gearbox Examine the application and establish:

a) Service factor fs according to type of load, number of starts per hour and required lifetime(tab. A4);
b) Determine calculated torque according to required output torque M_{r2} as follows:

$$M_{c2} = M_{r2} \times f_s \quad (14)$$

c) 根据所需的输出转速 n_2 和输入转速 n_1 确定传动比：

c) Determine gear ratio from

$$i = \frac{n_1}{n_2} \quad (15)$$

d) 确定了输出转矩 M_{c2}和传动比i后，根据输入转速n_1查找减速机额定值表，选择最接近的传动比以及满足以下条件的减速机机座号：

d) Once M_{c2} and i are determined, locate the gearbox rating chart for the drive speed n_1 and select a gearbox featuring the ratio i nearest to calculated ratio that also satisfies the condition:

$$M_{n2} \geq M_{c2} \quad (16)$$

如果减速机要配套 IEC 标准电机，必须检查电机接口是否可用。

If a IEC normalised motor is to be fitted onto the gearbox, check availability of the applicable adapter.

13.0 校核

a) 热功率
确保减速机热功率大于或等于应用的机械功率，见第9页中公式(4)。如果不能满足，应选择较大的减速机或增加一个辅助冷却系统。

13.0 After the drive unit has been selected check the following:

a)Thermal capacity
Make sure that the thermal capacity of the gearbox is equal to or greater than the mechanical power required by the application, as per equation (4) at page 9. If this is not the case provide a supplementary cooling system (see chap. 29) or select a larger gearbox.

b) 最大转矩
确保瞬时峰值转矩和带载启动转矩不超过减速机的额定最大转矩 M_{2max}。

b) Maximum torque
Make sure that neither the momentary peak torque nor the starting torque under load ever exceed the M_{2max} value that the gearbox is rated.

c) 悬臂载荷
检查所选配置并确定：
输入轴和 / 或输出轴上的悬臂载荷可通过下列公式求出：

c) Overhung load
Examine the application and establish:
-overhung load applying to input and/or output shaft through the following formula:

$$R_{c1-2} = \frac{2000 \times M_{r1-2} \times K_r}{d} \qquad (17)$$

R_{C1-2} 悬臂载荷
1= 表示输入轴
2= 表示输出轴
M_{r1-2} 轴上的转矩 (Nm)
d P.C.D (mm) 传动部件分度圆直径 (链轮、齿轮、带轮等)
Kr=1 链条传动
Kr=1,25 齿轮传动
Kr=1,5-2,5 V形传动

R_{C1-2} overhung load (N)
1= for input shaft
2= for output shaft
M_{r1-2} Torque at the shaft (Nm)
d P.C.D (mm) of transmission element (sprocket, gear, pulley, etc.)
Kr=1 chain transmission
Kr=1,25 gear transmission
Kr=1,5-2,5 V-belt transmission

- 如需延长使用寿命，在表（A8）中选择寿命系数f_L

- for extended lifetime requirements, look up lifetime factor f_L in table (A8).

（A8）

使用寿命 Lifetime	2500h	5000h	10000h	15000h	25000h	50000h	100000h
f_L	0.66	0.81	1.00	1.13	1.32	1.62	2.00

c_1）输出轴
- 对于作用在轴中点的负载，确保满足以下条件:

c_1) output shaft
- for loads applying at shaft mid-point, check that the following condition is verified:

$$R_{n2} \geq R_{c2} \times f_L \qquad (18)$$

其中R_{n2}是指轴中点的许用载荷，在额定值表中列出。

where R_{n2} is the permitted load at shaft mid-point, as listed in the rating charts.

- 如作用点不位于轴中点上，除LSH型式外，确定偏移距离X并在相关图表中查找调整系数f_{x2}（参照显示各减速机外形图的页码）

- Should the point of application not be located at shaft mid-point - with the exception of version LSH establish the offset value x and find the adjusting factor f_{x2} in the relevant diagram (following the pages showing the installation drawing of gearbox under study).
The following condition must be verified:

$$R_{x2} = R_{n2} \times f_{x2} \geq R_{c2} \times f_L \qquad (19)$$

- VK输出
确定：
- 径向载荷R_{C2}
- 轴向载荷A_{C2}
- 载荷R_{C2}的偏移距离X

查询相应减速机的图表，根据相应的距离X和最接近A_{C2}/R_{C2}比值的A_{n2}/R_{n2}比值确保以下等式成立：

- VK output
Determine:
- Radial load R_{c2}
- Thrust load A_{c2}
- Offsetx of load R_{c2}

Look up the diagram relevant to the gearbox under study and identify permitted radial load R_{x2} corresponding to distance X and the ratio A_{n2}/R_{n2} nearest to value A_{c2}/R_{c2}.
Make sure the following equation is verified:

$$R_{x2} \geq R_{c2} \qquad (20)$$

图表中的数值是指：
- n_2=10转/分钟
- 10000小时理论使用寿命
对于不同输出转速n_2和预期使用寿命，需考虑：
- 表格（A9）中所示的速度系数f_{n2}：

Values in the diagram refer to:
- n_2 = 10 rpm
- 10000 hrs theoretical lifetime
For different output speed n_2, or lifetime expectancy, consider:
- a speed factor f_{n2} as per table (A9):

（A9）

n_2	1	2.5	5	10	15	25	50	100
f_{n2}	2.0	1.51	1.23	1.00	0.88	0.76	0.62	0.50

- 表（A8）中所示的使用寿命系数f_L。
必须满足以下条件：

- a lifetime factor f_L according to table (A8).
This condition must be verified:

$$R_{x2} \times f_{n2} \geq R_{c2} \times f_L \quad (21)$$

c2）输入轴
根据公式（17）计算所得的载荷值R_{c1}，确定轴向偏移距离X并在特定减速机载荷表中找出许用载荷R_{n1}.
必须满足以下条件：

c2) input shaft
Based on the load value R_{c1} calculated through formula (17), determine point of load application over shaft length x and locate permitted load R_{n1} in the load diagram relevant to the specific gearbox.
The following condition must be verified:

$$R_{n1} \geq R_{c1} \quad (22)$$

图表中的数值适用于：
- 输入转速n_1=1000转/分钟
- 1000小时理论使用寿命

Values listed in the diagram apply for:
- drive speed n_1 = 1000 rpm
- 10000 hrs theoretical lifetime

对于不同的输入转速和预期的使用寿命，需考虑：
表（A10）中所示的调节系数f_{n1}：

For different input speed, or life expectancy, consider:
The adjusting factor fn1 as per table (A10) here below:

（A10）

n_2	500	750	900	1200	1500	1800
f_{n1}	1.23	1.09	1.03	0.95	0.89	0.84

-表（A8）所示的使用寿命系数f_L
必须满足以下条件：

-a lifetime factor f_L as per table (A8).
The following condition must be verified:

$$R_{n1} \times f_{n1} \geq R_{c1} \times f_L \quad (23)$$

d） 轴向载荷
计算轴上所承受的轴向载荷A_{C2}的大小和方向。对于拟选减速机，根据输出类型和轴向载荷方向来确定调整系数f_{a2}，通常使用符号（+）和(-）表示，
如下图所示：

d) Thrust loads
Calculate value and direction of thrust A_{C2} that applies axially onto the shaft. For the gearbox under study locate the adjusting factor f_{a2} corresponding to the type of out-put and the direction the thrust load applies, with the signs (+) and (-)conventionally applied as follows:

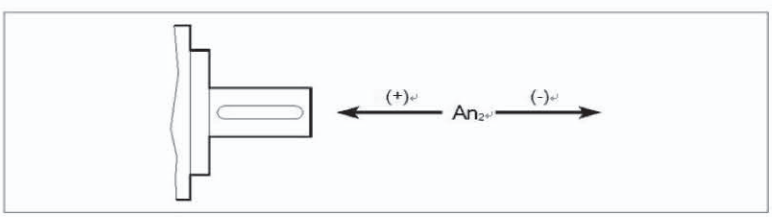

根据R_{n2}和f_{a2}确定许用轴向载荷A_{n2}：

From R_{n2} and f_{a2} determine the value of admissible thrust load A_{n2}:

$$An_2 = Rn_2 \times fa_2 \quad (24)$$

从表（A8）中选择与轴承预期理论寿命相应的调整系数f_L

From chart (A8) select the adjusting factor f_L corresponding to the theoretical lifetime of bearings that is to be expected.

根据可用负载类型在下表中找出轴向负载系数 K_a:

From chart below locate the axial load duty factor K_a depending on the type of loading that is applicable:

	负载类型 Type of duty		
	均匀负载 Uniform	中等负载 Moderate shock	重负载 Heavy shock
K_a	1.0	1.25	1.5

确定所有系数后，确保满足以下条件：

With all factors so determined verify that the following condition is satisfied:

$$Ac_2 \times f_L \times K_a \leq An_2 \quad (25)$$

如果同时承受径向载荷和轴向载荷，请与国茂技术服务部联系。

If radial and axial loads apply simultaneously, please consult GUOMAO Technical Service.

14.0 选择电机

a) 根据以下公式计算减速机所需的输入功率。须提前确定以下参数：
- 所需转矩 M_{r2}
- 输出转速 n_2
- 效率η_d

14.0 SELECTING THE MOTOR

a) Through the formula here after calculate the power required to gearbox input shaft. The following parameters must be determined on beforehand:
- required torque M_{r2}
- output speed n_2
- efficiency η_d

$$P_{r1} = \frac{M_{r2} \times n_2}{9550 \times \eta_d} \quad (26)$$

表（A3）列出了不同型号减速机的效率η_d

Table (A3) lists the efficiency values η_d for the various types of gearboxes.

b) 根据以下条件，在电机选型表中选择合适的电机：

b) In the electric motor section select a motor that is sufficiently rated, as per the following condition:

$$Pn \geq P_{r1} \quad (27)$$

对于非连续工作制S1条件下使用的电机，电机额定值可使用系数f_m进行调整，见表（A6）。

优先选择四极电机或较低转速的电机。

For duties other than continuous S1 the motor rating can be upgraded through the factor f_m, listed in table (A6).
4-Pole motors, or lower speed motors, should be preferred.

15.0 安装

为保证减速机正确可靠运行，需要遵守几条安装准则。
此处所列准则可用作减速机选型指南。
遵循我们销售部门提供的减速机安装、使用和维护手册，就能正确、有效地进行安装。
以下是安装准则的简要描述：

15.0 INSTALLATION

Observing a few rules for correct installation is essential to the reliable and proper operation of the gearbox.
The rules set out here are intended as a preliminary guide to selecting gearbox.
For effective and proper installation, follow the instructions given in the Installation, use and maintenance manual available from our Sales network.
Following is a brief outline of installation rules:

a) 固定：
- 将减速机安放在一个足够坚硬的表面上，结合面应经过机加工且保持平坦。

- 对法兰安装的带花键空心输出轴的减速机尤其重要。

- 在输出端有较大径向载荷的应用中，建议使用法兰安装，因为这种安装方式能在减速机上实现双导径。

- 确保减速机适合于所需的安装位置。

- 使用8.8或更高等级的螺栓固定减速机。拧紧螺栓至相应图表中规定的额定值。
  当传送的转矩大于或等于给定M2max 值的70%并频繁换向时，使用等级高于10.9 的螺栓。
  部分减速机可以使用螺栓和销进行固定。如果使用了销，插入减速机的长度至少为直径的1.5倍。

a) Fastening:
- Place the gearbox on a surface providing adequate rigidity. Mating surfaces should be machined and flat.

- This applies especially to flange-mounted gearboxes with splined hollow output shafts.

- In applications that involve high radial loads at the output end, flange mounting is recommended for some gearboxes as this mounting pattern benefits from the double pilot diameters provided on these gearboxes.

- Make sure the gearbox is suitable for the required mounting position.

- Use bolts of grade 8.8 or greater to secure the gearbox. Tighten the bolts to the rated values specified in the relevant charts.
  With transmitted torque greater than or equal to 70%of the given M_{2max}, and with frequent reversals, use bolts with minimum grade 10.9.
  Some gearboxes can be fastened using both bolts and pins. If a pin is used, the portion of the pin inserted into the structure the gearbox is being installed to should be at least 1.5 times its diameter.

b) 连接
- 装配传动装置零件至减速机上时，禁止使用铁锤或类似工具进行敲打。压入零件时，可使用维护螺钉和轴端螺纹。装配前务必清除轴上的油脂或防锈剂。

b) Connections
- When fitting transmission elements onto the gearbox do not tap them with hammers or similar tools. To slide these parts in, use the service screws and taps provided at the shaft ends. Be sure to clean off any grease or rust preventative from the shafts before fitting any parts.

- 旋转方向
电机接线前请注意输入/输出轴的布局，如下图所示：

- Direction of rotation
Before wiring the motor please note the input/output shaft arrangement, as described in the diagram here after:

(A11)

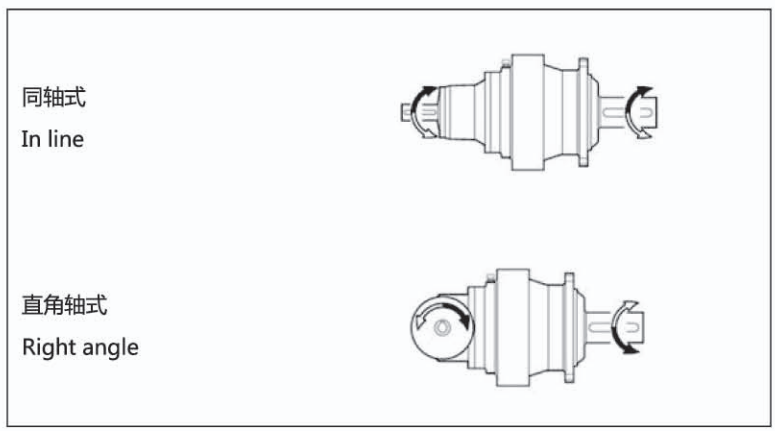

c) 油漆
- 使用和减速机底漆---致的油漆，请参照:供货条件。
在油漆之前，保护好装在轴上的密封件。
与溶剂接触会损坏密封件并导致漏油。

c) Paint coating
- Use paint compatible with the primer applied to the gearbox, see: Supply conditions.
Prior to painting, tape the seal rings installed on the shafts.
Contact with the solvent may deteriorate the seals with subsequent oil leakage.

d) 润滑
- 调试前，在减速机中装入指定型号和数量的润滑油（参照：润滑）。
可通过合适的油位塞或观察孔检测油位，每个减速机都装有观察孔，位置与安装方式相关。

d) Lubrication
- Prior to commissioning, fill the gearbox with the recommended type and quantity of oil (see: Lubrication).
The level is to be checked through the appropriate plug, or sight glass, each gearbox is provided with, and located according to the mounting position originally specified.

注意：组合式减速机为行星减速机 提供独立的 润滑。

NOTE: Combined gearboxes feature separate lubrication for planetary stages

终身润滑减速机在工厂里预装了合成油（参照表A27），用户不必注油。

The operations described above are not to be performed with life-lubed gearboxes, that are factory filled with synthetic oil (see tab. A27)

16.0 - 维护

初次运行50 小时后需要检查安装螺栓是否松动。

运行100-150 小时后必须进行首次换油。
随后每运行2000-3000 小时更换一次润滑油，具体取决于应用情况。也可以选择一年更换一次。

然而，必须每隔一段时期检察油面并按规定注油。

间歇工作制条件下应每月检查设备，连续工作制条件下需经常检查。

16.0 - MAINTENANCE

Check the tightness of mounting bolts after the initial 50 hours of operation.
Change the oil first after 100-150 hours operation.
Subsequently, change the oil every 2000 - 3000 hours operation, depending on the application. Alternatively change oil once a year.
However, oil level should be checked at regular intervals and topped up as required.
Check monthly if unit operates under intermittent duty, more frequently if duty is continuous.

17.0 – 存放

遵循以下说明正确存放产品：

a) 不要存放在户外露天或过于潮湿的地方。

b) 始终在设备和地板之间垫有木板、木材或其他材料。减速机不得与地板直接接触。

c) 对于存放时间超过60天的减速机，所有加工面如法兰、轴和联轴器必须涂刷防锈产品（Mobilarma248或等效产品）。

d) 当减速机存放时间可能超过6个月时，必须采取以下额外措施：

- 所有加工部件需涂上油脂防止生锈。

- 放置减速机时必须使透气塞处于顶部并注满润滑油（不适用于终身润滑减速机）。减速机投入运转前，重新注入适当数量和型号的润滑油（表A26）。

17.0 - STORAGE

Observe the following instructions to ensure correct storage of the products:

a) Do not store outdoors, in areas exposed to weather or with excessive humidity.

b) Always place boards, wood, or other material between the products and the floor.
The gearbox should not have direct contact with the floor.

c) For storage periods of over 60 days, all machined surfaces such as flanges, shafts and couplings must be protected with a suitable anti-oxidation product (Mobi-larma 248 or equivalent product).

d) When units are expected to be in storage for more than 6 months, the following extra measures are required:

- Smear all machined parts with grease to prevent oxidation.

- Place the gearbox so that the breather plug is upper most and fill it with oil (this does not apply to life-lubricated gearboxes). Before the gearbox is put into operation, the appropriate type and quantity of oil should be restored (tab. A26).

18.0 – 供货条件

减速机通常按以下标准进行供货：

a) 安装方式符合订单要求；

b) 无润滑油的内部零件受到测试时用的润滑油膜的保护（型号SHELL ENSIS OIL N）

c) 安装表面不涂漆。

d) 根据出厂规范进行测试；

e) 适当包装；

f) 提供 IEC 电机安装配件；

g) 需终身润滑的减速机在制造厂内加注润滑油。

18.0 - SUPPLY CONDITIONS

Gearboxes are generally supplied as follows:

a) arranged for installation in the mounting position specified in the purchase order;

b) Unlubricated. Inner parts are protected by a film of the oil used for testing purpose (type SHELL ENSIS OIL N);

c) Mounting surfaces are not paint coated.

d) tested to factory specifications;

e) suitably packed;

f) complete with mounting hardware for IEC electric motors;

g) gearboxes lubricated "for life" are factory filled with oil.

19.0 - GTN00 系列减速机命名说明

19.0 - GTN00 GEARBOX DESIGNATION

GTN 11 L 2 16.7 HS

输出型式 OUTPUT VERSION



LS 轻型花键实心轴输出
Light splined male shaft



LK 轻型平键实心轴输出
Light solid keyed shaft



HS 重型花键实心轴输出
Heavy duty splined male shaft

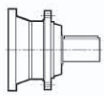

HK 重型平键实心轴输出
Heavy duty solid keyed shaft

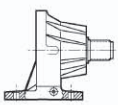

MS 地脚安装式花键轴输出
Foot base with splined shaft

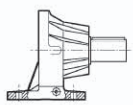

MK 地脚安装式平键实心轴输出
Foot base with solid keyed shaft

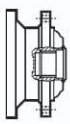

LSH 花键空心轴输出
Hollow splined shaft

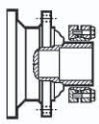

LP 配收缩盘空心轴输出
Hollow shaft for shrink disc

速比 GEAR RATIO

填写选型表中的选定的传动比（包括小数点和小数）
Fill in the value of the transm. ratio (including point and decimals) reported in the selection charts)
如/Ex. : 1/5.33 = 5.33 1/44.6 = 44.6 1/131 = 131

传动级数
REDUCTIONS

1, 2, 3, 4

设计型式 DESIGN

同轴式 L = In line

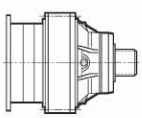

直角轴式 **R**= Right angle

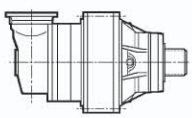

减速机机座号 GEARBOX FRAME SIZE

00	05	10	15	19
01	06	11	16	21
03	07	13	17	
04	09	14	18	

减速机系列 SERIES

P180 A SOF .....

输出配件 *OUTPUT FITTINGS*



小齿轮
PM... = Pinions



花键棒
SOF = Splined bar



套筒联轴节
HOS = Sleeve coupling



收缩盘
LOP = Shrink disc



法兰
FOA = Flange

安装位置 *MOUNTING POSITION*

输入型式 *INPUT*



平键输入轴
Input keyed shaft

	S01A	S01B	S05B	S06B	S07A	S07B	S10B	S11B
diam.	Ø 24	Ø 38	Ø 48	Ø 60	Ø 60	Ø 80	Ø 80	Ø 80



带风扇实心输入轴
Solid input shaft with fan
Arbre rapide équipé de ventilateur

	SV05B	SV06B	SV07A	SV07B	SV10B	SV11B
diam.	Ø 48	Ø 60	Ø 60	Ø 80	Ø 80	Ø 80

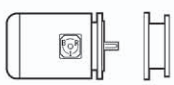

IEC 电机输入接口
Electric motor adapter input
Adaptation pour moteur électrique

P+IEC (P71...P250)



联接紧凑型电机(可提供机座号至 GTN07)
Integrated gearmotor with in-built compact electric motor (available up to size GTN07)

S2, S3, S4

20.0 – 安装位置

一个产品完整的型号必须包含安装位置。同轴式减速机请参阅表（A12），直角轴式减速机请参阅表（A13）

20.0 - MOUNTING POSITION

The product designation is only complete when the mounting position is also specified. Please refer to table (A12) for in-line gear units and to (A13) for right angle drives.

20.1– 同轴式减速机

（A12）

20.1– In-line units

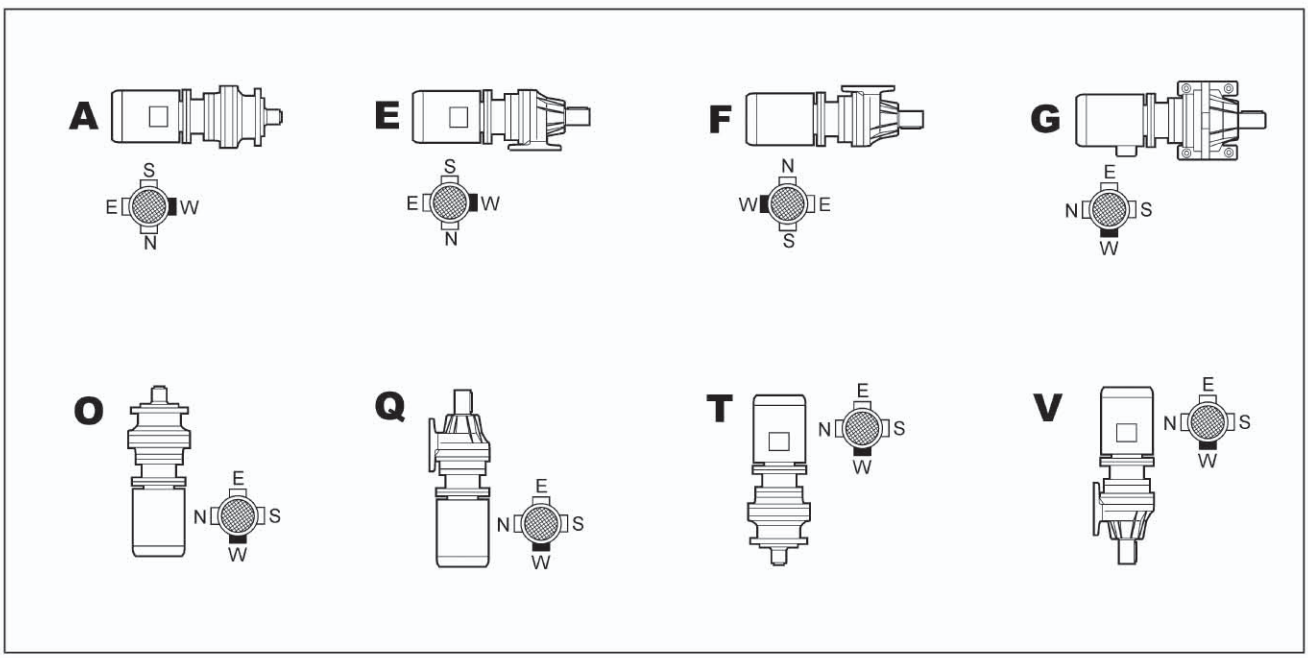

20.2 -直角式减速机

20.2 - Right angle units

(A13)

B0-B1-B2-B3

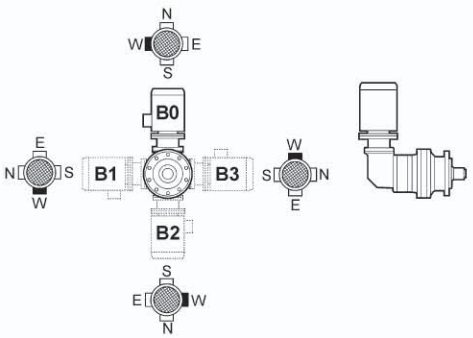

I0-I1-I2-I3

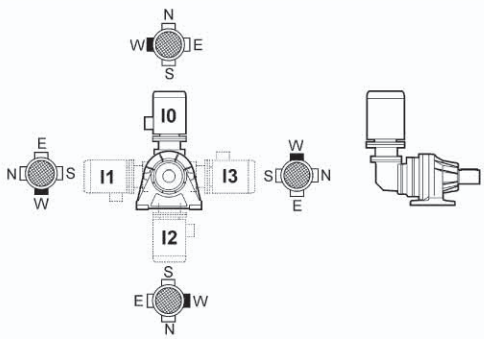

J0-J1-J2-J3

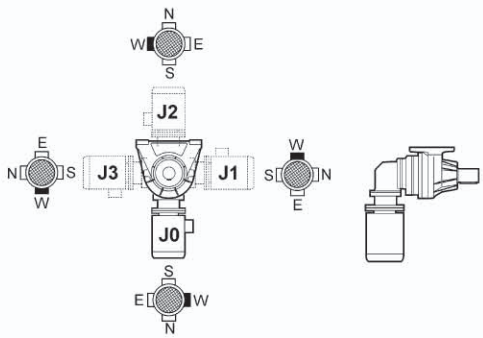

M0-M1-M2-M3

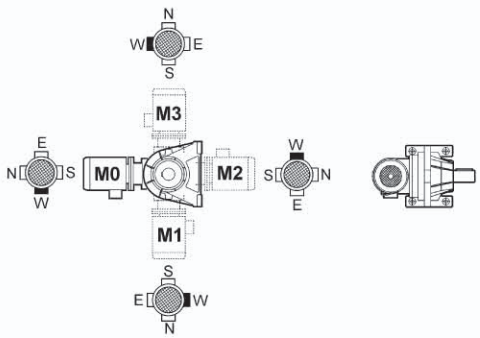

P0-P1-P2-P3

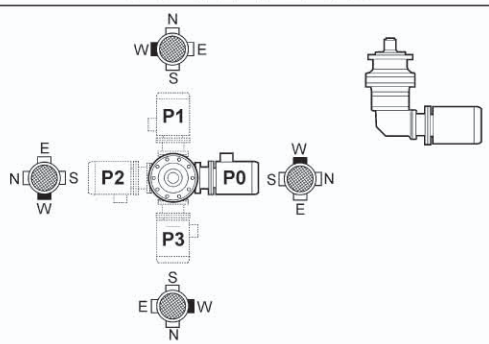

R0-R1-R2-R3

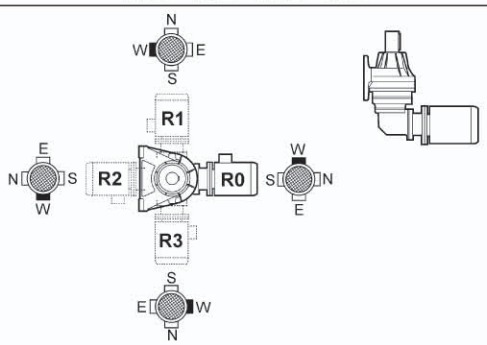

U0-U1-U2-U3

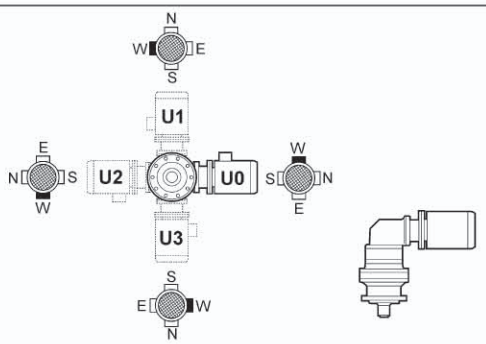

W0-W1-W2-W3

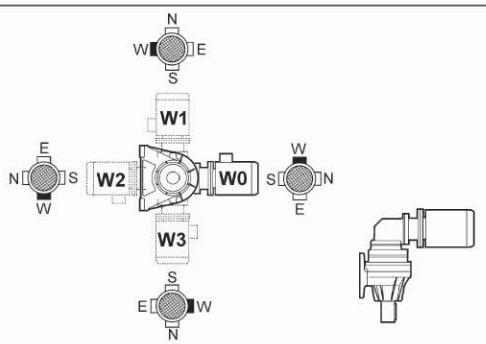

21.0 – 润滑（运行之前）

减速机采用润滑油润滑。对于竖直安装的减速机，鉴于润滑油可能不能保证最高处的轴承的可靠润滑，因此需采用其他润滑措施。

减速机可以在环境温度为 -20℃至+40℃之间运行。当温度为 -20℃和 -10℃之间时，减速机启动前必须充分且均匀预热，或者空载启动。当减速机温度达到 -10℃或更高温度时，方可加载。

运行之前，在减速机中注入适量的润滑油，润滑油的粘性根据列表（A16）进行选择。
减速机通常备有注油孔、油位塞和放油塞。因此在订购减速机时必须指定安装位置。
表（A16）列出了常规应用中所推荐的润滑油品牌和型号。

- 注意：对于非常规工作条件下的应用，请征询制造商的意见。
- 工作油温不得超过85-90℃。
- 除非另有说明，减速机供货时通常是不带润滑油的。
- 不同型号减速机所列的油量只是估计值。根据订货时指定的安装位置设置油位塞的位置，从而确保正确注油，减速机应注满至油位塞。
- 如果传送功率超过减速机的热容量，须提供辅助冷却装置（参照：外置冷却系统）。

21.0 – LUBRICATION(prior to start-up)

Gear units are oil lubricated. For gearboxes specified for vertical installation, whereas the oil coverage may not be sufficient to ensure proper lubrication of the uppermost bearings, extra lubrication provisions are used.

Operation of gear units is permitted at ambient temperatures between -20°C and +40°C. However, for temperatures between -20°C and -10°C unit may only start up after it has been progressively and evenly pre-heated, or otherwise initially operated unloaded. Load may then be connected to the output shaft when the gear unit has reached the temperature of -10°C, or higher.

Prior to starting-up, fill the gearbox with the appropriate quantity of oil, selecting the viscosity as per table (A16).
Gearboxes are generally provided with oil fill, level and drain plugs. As such, the mounting position needs always to be specified when ordering the gearbox.
The table (A16) lists the most common brands of lubricant and the types recommended for normal applications.

- Note: For applications with non-routine operating conditions, consult factory with complete information.
- Oil temperature must not exceed 85-90°C in operation.
- Unless otherwise specified, gear units are supplied unlubricated.
- The oil capacities listed for the various types of unit are indicative only. Fill the gearbox up to the level plug, located as per the mounting position specified when ordering to ensure the gearbox is properly filled.
- Should transmitted power exceed the thermal capacity of the unit a supplementary cooling unit must be provided (see: Supplementary cooling systems).

(A16)

	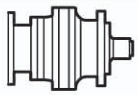
	ISO标准3448 EP级 *ISO standard 3448 EP grade*
Ta	**-10°C / +30°C**	**+10°C / +45°C**	**-20°C / +60°C**
	ISO VG 150	ISO VG 220	ISO VG 150-220
SHELL	**OMAL A EP1 50**	**OMALA EP220**	**TIVELA OIL S**
AGIP	BL ASIA150	BLASIA 220	BL ASIA SX220
ARAL	DEGOL BG 150	DEGOL BG 220	DEGOL PAS 150-220
BP	ENERGOL GR XP 150	ENERGOL GR XP 220	EVERSYN EXP 150-220
CASTROL	ALPHA SP 150	ALPHA SP 220	AL PHASYN EP 150-220
CEPSA	ENGRANAJES HP 150	ENGRANAJES HP 220	ENGRANAJES HPX 150-220
CHEVRON	N.L. GEAR COMPOUNDS EP 150	N.L. GEAR COMPOUNDS EP 220	TEGRA SYNTHETIC GEAR EP 150-200
ESSO	SPARTAN EP 150	SPARTAN EP 220	SPARTAN S EP 150-220
FUCHS	RENOLIN CKC 150	RENOLIN Ckc 220	RENOLIN UNISYN CKC 150-220
KLUBER	KLUBEROIL GEM1-150	KLUBEROIL GEM1-220	KLUBERSYNT EG 4-150/ 4-220
Q8	GOYA 150	GOYA 220	EL GRECO 220
MOBIL	MOBIL GEAR 600 XP 150	MOBILGEAR 600 XP 220	MOBIL GEAR SHC XMP 1 50-220
MOLYCOTE	L-0115	L-0122	L-2115/L-2122
REPSOL	SUPER TAURO 150	SUPER TAURO 220	SUPER TAURO SINTETICO 150-220
TOTAL	CARTER EP 1500	CARTER EP 2200	CARTER SH 150-220

减速机最高温度不得超过80-85℃。
The temperature of the gear case should never exceed 80-85°C at the hottest point.

- 聚 α 烯烃合成油 (PAO)
- Polyalphaolefin based synthetic oil (PAO)

	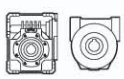				
	润滑油粘度 ISO VG		*Oi/ viscosity ISO VG*		
	Ta ≤ -20°	-20°< **Ta** ≤10°	0°≤ **Ta** ≤30°	20°≤ **Ta** ≤40°	**Ta** > 40°
矿物油 EP	(*)	150	320	460	460(*)
合成油 PAO EP	(*)	150	220	320	460(*)
合成油 PAG	(*)	150	220	320	460(*)

21.1 – GTN_L – GTN_R 系列减速机油堵位置

21.1 – Oil plug positions GTN_L - GTN_R

(A17)

所有减速机
1 注油塞/透气塞
2 油位塞
3 放油塞

1 级同轴式行星减速机
1A 注油塞/透气塞
3A 放油塞

2 级直角轴式减速机
1B 注油塞/透气塞
3B 放油塞

ALL UNITS
1 Filler/breather oil plug
2 Oil level plug
3 Oil draining plug

1 STAGE IN-LINE GEAR UNITS
1A Filler/breather oil plug
3A Oil draining plug

2 STAGE RIGHT ANGLE GEAR UNITS
1B Filler/breather oil plug
3B Oil draining plug

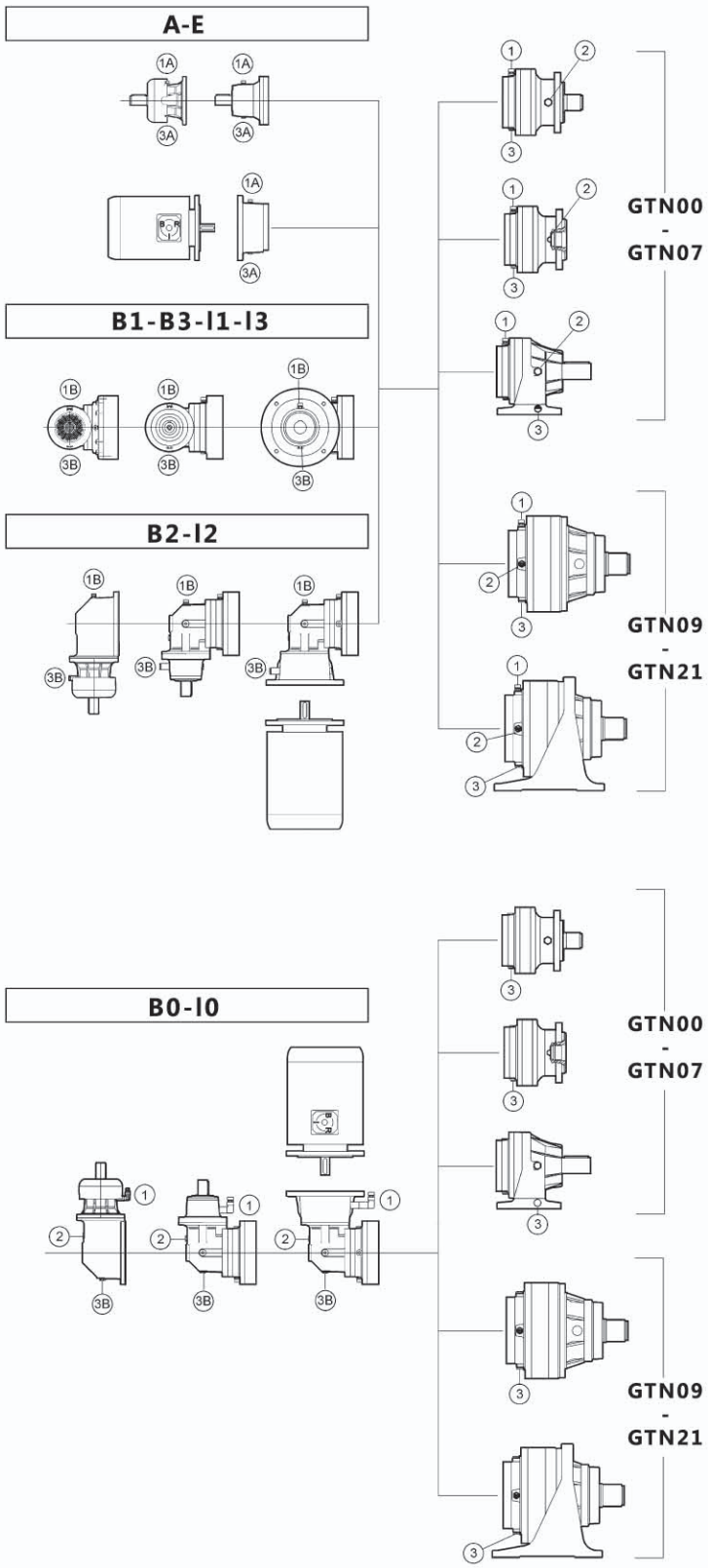

21.1– GTN_L–GTN_R 系列减速机油堵位置

21.1– Oil plug positions GTN_L - GTN_R

(A18)

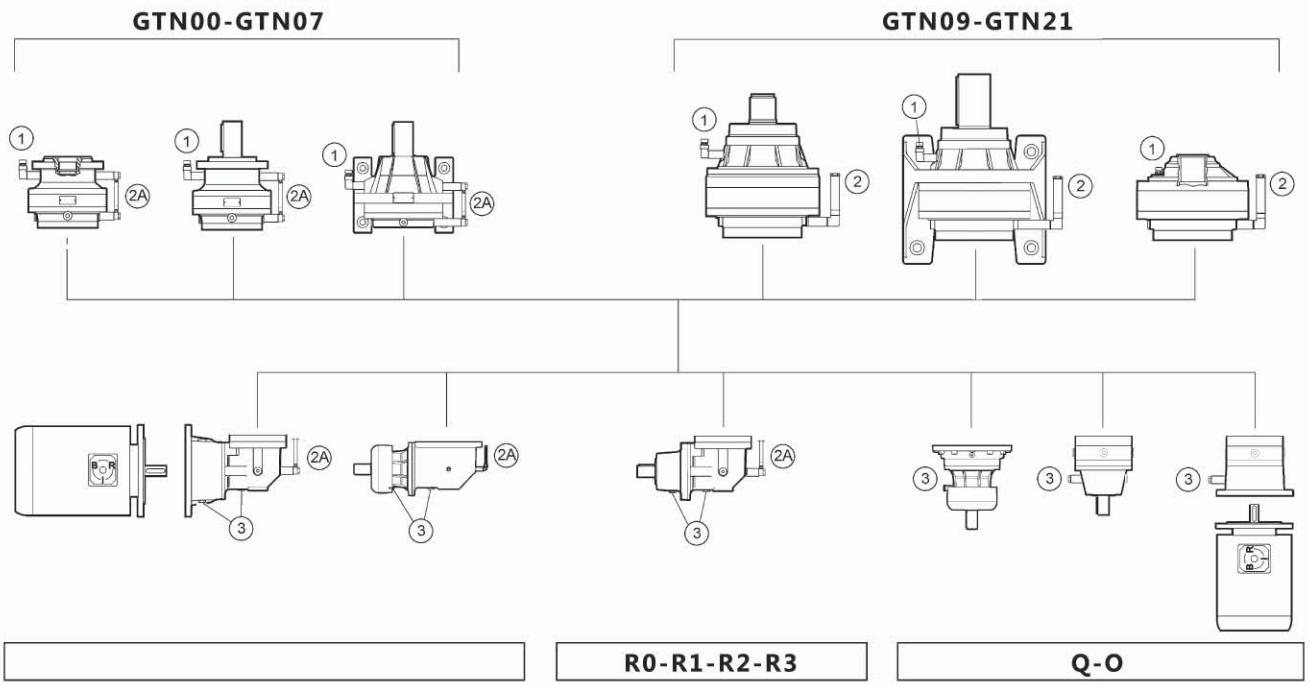

所有减速机
注油塞/透气塞
油位塞
透明油位管
放油塞
连续工况中的附加油罐

ALL GEARBOXES
Filler/breather oil plug
Oil level plug
Transparent oil level pipe
Oil draining plug
Expansion tank for continuous duty

(A19)

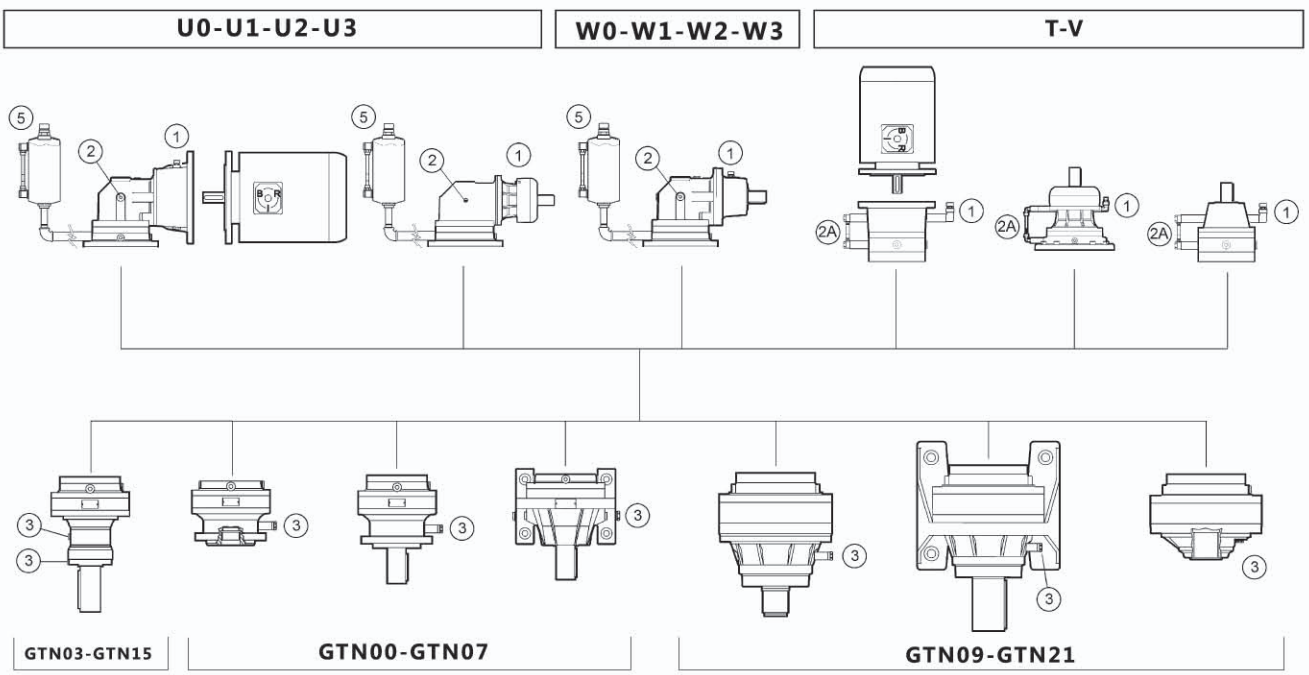

21.2–GTN_L系列润滑油量（I）

（A26a）

		Mounting position 安装位置		
		A	T	O
GTN00	L1	0.6	1.0	0.9
	L2	0.9	1.3	1.2
	L3	1.2	1.6	1.5
	L4	1.5	1.9	1.8
GTN01	L1	0.8	1.2	1.1
	L2	1.1	1.5	1.4
	L3	1.4	1.8	1.7
	L4	1.7	2.1	2.0
GTN03	L1	1.3	2.3	2.0
	L2	1.6	2.6	2.3
	L3	1.9	2.9	2.6
	L4	2.2	3.2	2.9
GTN04	L1	1.4	2.4	2.2
	L2	1.9	2.9	2.7
	L3	2.2	3.2	3.0
	L4	2.5	3.5	3.3
GTN05	L1	1.6	2.6	2.4
	L2	2.1	3.1	2.9
	L3	2.4	3.4	3.2
	L4	2.7	3.7	3.5
GTN06	L1	2.5	3.5	3.2
	L2	3.3	4.3	4.0
	L3	3.6	4.6	4.4
	L4	3.9	4.9	4.6
GTN07	L1	3.5	5.0	4.5
	L2	4.5	6.0	5.5
	L3	5.0	6.5	6.0
	L4	5.3	6.8	6.3
GTN09	L1	4.0	5.5	5.0
	L2	5.0	6.5	6.0
	L3	5.5	7.0	6.5
	L4	5.8	7.3	6.8

注：所有润滑油量仅为估计值。注油后专门的油堵检查实际油位。

21.2– Oil quantity（I） GTN_L Series

		Mounting position 安装位置		
		A	T	O
GTN10	L1	5.0	6.5	6.0
	L2	6.3	7.8	7.3
	L3	7.1	8.6	8.1
	L4	7.4	8.9	8.4
GTN11	L1	7.0	12	10
	L2	9.0	14	12
	L3	10	15	13
	L4	11	16	14
GTN13	L1	9.0	14	12
	L2	12	17	15
	L3	13	18	16
	L4	13	18	16
GTN14	L2	17	25	21
	L3	19	27	23
	L4	20	28	24
GTN15	L2	19	27	23
	L3	21	29	25
	L4	22	30	26
GTN16	L2	22	30	26
	L3	24	32	28
	L4	25	33	29
GTN17	L2	26	41	36
	L3	29	44	39
	L4	30	45	40
GTN18	L3	40	55	50
	L4	43	58	53
GTN19	L3	50	70	60
	L4	53	73	63
GTN21	L3	56	76	66
	L4	60	80	70

N.B. Oil quantities are indicative. Check actual level after filling through the appropriate plug.

21.2–GTN_L系列润滑油量（I）

（A26b）

21.2– Oil quantity（I） GTN_L Series

		Mounting position 安装位置		
		B0	U_	P_
GTN00	R2	1.2	1.7	1.5
	R3	1.5	2.0	1.8
	R4	1.8	2.3	2.1
GTN01	R2	1.6	2.1	1.9
	R3	1.9	2.4	2.2
	R4	2.2	2.7	2.5
GTN03	R2	2.2	2.8	2.6
	R3	2.5	3.1	2.9
	R4	2.8	3.4	3.2
GTN04	R2	2.3	2.9	2.7
	R3	2.8	3.4	3.2
	R4	3.1	3.7	3.5
GTN05	R2	2.5	3.1	2.9
	R3	3.0	3.6	3.4
	R4	3.3	3.9	3.7
GTN06	R2	4.0	5.0	4.8
	R3	4.8	5.8	5.6
	R4	5.1	6.1	5.9
GTN07	R2	6.0	8.0	7.0
	R3	7.0	9.0	8.0
	R4	7.5	9.5	8.5

		Mounting position 安装位置		
		B0	U_	P_
GTN09	R2	6.5	8.5	7.5
	R3	7.5	9.5	8.5
	R4	8.0	10	9.0
GTN10	R2	13	15	14
	R3	11	13	12
	R4	12	14	13
GTN11	R2	14	19	17
	R3	16	21	19
	R4	17	22	20
GTN13	R2	16	21	19
	R3	19	24	22
	R4	20	25	23
GTN14	R3	25	33	29
	R4	28	36	32
GTN15	R3	27	35	31
	R4	30	38	34
GTN16	R3	30	38	34
	R4	33	41	37
GTN17	R3	38	52	48
	R4	42	56	52
GTN18	R4	48	63	58

注：所有润滑油量仅为估计值。注油后专门的油堵检查实际油位。

N.B. Oil quantities are indicative. Check actual level after filling through the appropriate plug.

齿轮箱选型

A GEARMOTOR SELECTION BY POWER

A 根据电机功率选择齿轮箱

B GEARBOX SELECTION BY APPLICATION TORQUE

B 根据应用扭矩选择齿轮箱

C GEARMOTOR SELECTION BY NUMBER OF WORKING CYCLES

C 根工作循环数选择齿轮箱


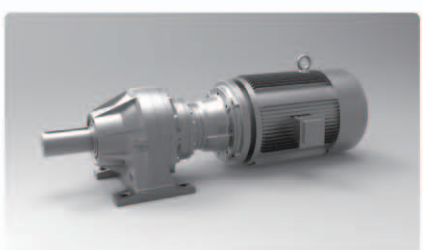


A

A GEARMOTOR SELECTION BY POWER

A 根据电机功率选择齿轮箱

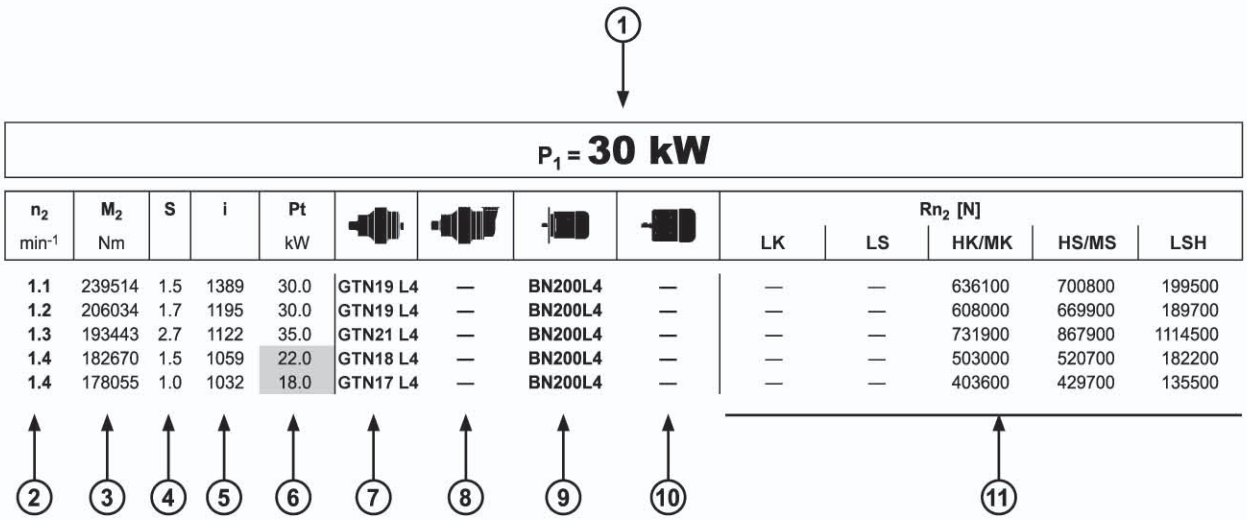

1	电机额定功率	*Rating of electric motor connected to the gearbox*
2	减速机输出转速	*Gearbox output speed*
3	输出扭矩	*Torque delivered at output shaft*
4	安全系数	*Safety factor*
5	传动比	*Gear ratio*
6	减速机热功率	*Gearbox thermal capacity*
7	同轴齿轮箱机座号	*Frame size of the in-line gear unit*
8	直角齿轮箱的机架尺寸注：后缀(B)或(C)旁边的框架尺寸是指不用的锥齿轮组。参考安装图纸	*Frame size of the right-angled gear unit* *NOTE: Suffix (B) or (C) alongside the frame size refer to different bevel gear sets. See installation drawings for reference*
9	IEC电机机座号和极数	*IEC motor size and pole number*
10	整体电机机座号和极数	*Integral motor frame size and pole number*
11	输出轴允许悬挑载荷，基于：安全系数S=1对于不作用于轴中点的力，请参见特定齿轮箱尺寸后面的页面中提供的图表	*Permitted overhung loading on output shaft, based on:* *- safety factor S=1* *- 10000 hrs theoretical lifetime* *For forces not applying at shaft midpoint, see diagrams provided in the pages followlng dimensions of the specific gearbox*

A

P_1 = 0.25 kW

n_2 min^{-1}	M_2 Nm	S	i	Pt kW					Rn_2 [N] LK	LS	HK/MK	HS/MS	LSH
0.47	4439	1.6	2916	6.0	**GTN06 L4**	—	**BN71A4**	—	45000	51000	101000	119000	35000
0.57	3688	3.0	2423	7.5	**GTN07 L4**	—	**BN71A4**	—	52000	65000	109000	145000	45000
0.59	3557	2.0	2337	6.0	**GTN06 L4**	—	**BN71A4**	—	45000	51000	101000	119000	35000
0.62	3415	1.1	2243	6.0	**GTN05 L4**	—	**BN71A4**	—	36000	42000	64000	74000	24000
0.67	3157	2.2	2074	6.0	**GTN06 L4**	—	**BN71A4**	—	45000	51000	101000	119000	35000
0.69	3031	0.9	1991	6.0	**GTN03 L4**	—	**BN71A4**	—	36000	42000	64000	74000	24000
0.69	3031	1.2	1991	6.0	**GTN04 L4**	—	**BN71A4**	—	36000	42000	64000	74000	24000
0.69	3031	1.8	1991	6.0	**GTN05 L4**	—	**BN71A4**	—	36000	42000	64000	74000	24000
0.74	2823	1.7	1854	6.0	**GTN05 L4**	—	**BN71A4**	—	36000	42000	64000	74000	24000
0.76	2764	1.1	1815	6.0	**GTN04 L4**	—	**BN71A4**	—	36000	42000	64000	74000	24000
0.87	2415	0.9	1586	6.0	**GTN03 L4**	—	**BN71A4**	—	36000	42000	64000	74000	24000
0.87	2415	1.6	1586	6.0	**GTN04 L4**	—	**BN71A4**	—	36000	42000	64000	74000	24000
0.87	2415	2.0	1586	6.0	**GTN05 L4**	—	**BN71A4**	—	36000	42000	64000	74000	24000
1.0	2086	1.2	1370	6.0	**GTN03 L4**	—	**BN71A4**	—	36000	42000	62200	74000	23800
1.0	2086	2.2	1370	6.0	**GTN05 L4**	—	**BN71A4**	—	36000	42000	62200	74000	23800
1.0	2046	1.8	1344	6.0	**GTN04 L4**	—	**BN71A4**	—	36000	42000	61900	74000	23700
1.1	1946	1.4	1278	6.0	**GTN03 L4**	—	**BN71A4**	—	36000	41900	60900	73300	23300
1.1	1946	2.8	1278	6.0	**GTN05 L4**	—	**BN71A4**	—	36000	41900	60900	73300	23300
1.1	1941	1.2	1275	6.0	**GTN01 L4**	—	**BN71A4**	—	11800	11800	29800	34000	7750
1.1	1935	2.0	1271	6.0	**GTN04 L4**	—	**BN71A4**	—	36000	41800	60800	73200	23200
1.2	1772	1.6	1164	6.0	**GTN04 L4**	—	**BN71A4**	—	35200	40600	59200	71300	22600
1.2	1687	1.0	1108	6.0	**GTN01 L4**	—	**BN71A4**	—	11300	11300	28600	32900	7400
1.3	1671	1.4	1098	6.0	**GTN03 L4**	—	**BN71A4**	—	34500	39800	58200	70000	22100
1.3	1671	2.7	1098	6.0	**GTN05 L4**	—	**BN71A4**	—	34500	39800	58200	70000	22100
1.4	1555	1.5	1022	6.0	**GTN01 L4**	—	**BN71A4**	—	11000	11000	27900	32100	7200
1.4	1551	1.8	1018	6.0	**GTN03 L4**	—	**BN71A4**	—	33600	38800	56900	68500	21600
1.4	1551	2.5	1018	6.0	**GTN04 L4**	—	**BN71A4**	—	33600	38800	56900	68500	21600
1.5	1434	1.6	942	6.0	**GTN01 L4**	—	**BN71A4**	—	10700	10700	27200	31300	7010
1.5	1364	1.6	896	6.0	**GTN03 L4**	—	**BN71A4**	—	32200	37200	54800	65900	20700
1.7	1254	1.8	824	12.0	—	**GTN03 R4**	**BN71A4**	—	31300	36200	53400	64300	20100
1.7	1246	0.9	819	6.0	**GTN00 L4**	—	**BN71A4**	—	9940	9940	25600	29400	6540
1.7	1246	1.8	819	6.0	**GTN01 L4**	—	**BN71A4**	—	10200	10200	26100	30000	6690
1.7	1242	2.2	816	6.0	**GTN03 L4**	—	**BN71A4**	—	31300	36100	53300	64100	20000
1.7	1213	1.5	797	12.0	—	**GTN03 R4**	**BN71A4**	—	31000	35800	52900	63600	19900
1.7	1213	2.8	797	12.0	—	**GTN05 R4**	**BN71A4**	—	31000	35800	52900	63600	19900
1.8	1167	1.3	766	10.0	—	**GTN01 R4**	**BN71A4**	—	9950	9950	25600	29400	6540
1.8	1149	1.0	755	6.0	**GTN00 L4**	—	**BN71A4**	—	9680	9680	25000	28700	6360
1.8	1149	1.9	755	6.0	**GTN01 L4**	—	**BN71A4**	—	9900	9900	25500	29300	6510
1.9	1093	2.0	718	6.0	**GTN03 L4**	—	**BN71A4**	—	29900	34600	51300	61700	19200
2.0	1069	2.5	702	6.0	**GTN04 L4**	—	**BN71A4**	—	29700	34300	50900	61300	19100
2.0	1065	2.5	699	12.0	—	**GTN04 R4**	**BN71A4**	—	29700	34300	50900	61200	19000
2.1	1003	2.1	659	12.0	—	**GTN03 R4**	**BN71A4**	—	29100	33600	50000	60100	18700
2.1	989	2.3	649	6.0	**GTN03 L4**	—	**BN71A4**	—	29000	33400	49700	59800	18600
2.2	938	1.1	616	6.0	**GTN00 L4**	—	**BN71A4**	—	9260	9260	24000	27600	6090
2.2	938	2.3	616	6.0	**GTN01 L4**	—	**BN71A4**	—	9260	9260	24000	27600	6090
2.3	933	1.6	613	10.0	—	**GTN01 R4**	**BN71A4**	—	9240	9240	23900	27500	6080
2.4	863	2.8	567	12.0	—	**GTN03 R4**	**BN71A4**	—	27700	32000	47700	57400	17800
2.5	852	3.0	560	12.0	—	**GTN04 R4**	**BN71A4**	—	27600	31800	47600	57200	17700
2.5	849	1.2	558	6.0	**GTN00 L4**	—	**BN71A4**	—	8950	8950	23300	26700	5890
2.5	849	2.5	558	6.0	**GTN01 L4**	—	**BN71A4**	—	8950	8950	23300	26700	5890
2.6	804	2.5	528	12.0	—	**GTN03 R4**	**BN71A4**	—	27000	31200	46700	56200	17300
2.8	752	1.4	494	6.0	**GTN00 L4**	—	**BN71A4**	—	8600	8600	22400	25800	5650
2.8	752	2.8	494	6.0	**GTN01 L4**	—	**BN71A4**	—	8600	8600	22400	25800	5650
2.8	748	0.9	491	10.0	—	**GTN00 R4**	**BN71A4**	—	8580	8580	22400	25700	5640
2.8	748	1.9	491	10.0	—	**GTN01 R4**	**BN71A4**	—	8580	8580	22400	25700	5640
3.0	690	1.5	453	10.0	—	**GTN00 R4**	**BN71A4**	—	8350	8350	21900	25100	5490
3.0	690	2.8	453	10.0	—	**GTN01 R4**	**BN71A4**	—	8350	8350	21900	25100	5490
3.1	681	1.5	447	6.0	**GTN00 L4**	—	**BN71A4**	—	8320	8320	21800	25000	5470
3.1	681	3.0	447	6.0	**GTN01 L4**	—	**BN71A4**	—	8320	8320	21800	25000	5470
3.4	614	1.1	403	6.0	**GTN00 L4**	—	**BN71A4**	—	8040	8040	21100	24300	5280
3.4	614	2.2	403	6.0	**GTN01 L4**	—	**BN71A4**	—	8040	8040	21100	24300	5280
3.5	599	1.1	394	10.0	—	**GTN00 R4**	**BN71A4**	—	7970	7970	21000	24100	5240
3.5	599	2.3	394	10.0	—	**GTN01 R4**	**BN71A4**	—	7970	7970	21000	24100	5240
3.5	612	2.8	389	7.5	**GTN03 L3**	—	**BN71A4**	—	24400	28200	42600	51300	15700
3.7	589	1.1	374	7.5	**GTN00 L3**	—	**BN71A4**	—	7840	7840	20600	23700	5150
3.7	589	2.3	374	7.5	**GTN01 L3**	—	**BN71A4**	—	7840	7840	20600	23700	5150
3.8	553	1.8	363	10.0	—	**GTN00 R4**	**BN71A4**	—	7760	7760	20500	23500	5100

P_1 = 0.25 kW

n_2 min^{-1}	M_2 Nm	S	i	Pt kW					Rn_2 [N] LK	LS	HK/MK	HS/MS	LSH
4.2	503	1.9	330	6.0	GTN00 L4	—	BN71A4	—	7520	7520	19900	22900	4940
4.6	471	1.4	299	7.5	GTN00 L3	—	BN71A4	—	7270	7270	19300	22200	4780
4.6	471	2.8	299	7.5	GTN01 L3	—	BN71A4	—	7270	7270	19300	22200	4780
4.7	443	2.1	291	10.0	—	GTN00 R4	BN71A4	—	7210	7210	19100	22000	4740
5.1	408	2.3	268	10.0	—	GTN00 R4	BN71A4	—	7020	7020	18700	21500	4610
5.8	377	1.7	240	7.5	GTN00 L3	—	BN71A4	—	6760	6760	18100	20800	4440
5.8	361	1.8	237	10.0	—	GTN00 R4	BN71A4	—	6740	6740	18000	20700	4430
6.2	348	2.6	221	7.5	GTN00 L3	—	BN71A4	—	6580	6580	17600	20300	4320
6.4	327	2.8	215	10.0	—	GTN00 R4	BN71A4	—	6520	6520	17500	20100	4280
7.2	302	2.2	192	7.5	GTN00 L3	—	BN71A4	—	6280	6280	16900	19400	4130
9.6	218	3.0	143	10.0	—	GTN00 R4	BN71A4	—	5690	5690	15500	17800	3740
10.4	209	2.6	133	12.0	—	GTN00 R3	BN71A4	—	5550	5550	15100	17400	3650

P_1 = 0.37 kW

n_2 min^{-1}	M_2 Nm	S	i	Pt kW					Rn_2 [N] LK	LS	HK/MK	HS/MS	LSH
0.47	6672	1.0	2916	6.0	GTN06 L4	—	BN71B4	M1SD4	45000	51000	101000	119000	35000
0.57	5543	2.0	2423	7.5	GTN07 L4	—	BN71B4	M1SD4	52000	65000	109000	145000	45000
0.59	5346	1.3	2337	6.0	GTN06 L4	—	BN71B4	M1SD4	45000	51000	101000	119000	35000
0.66	4744	1.5	2074	6.0	GTN06 L4	—	BN71B4	M1SD4	45000	51000	101000	119000	35000
0.69	4555	1.2	1991	6.0	GTN05 L4	—	BN71B4	M1SD4	36000	42000	64000	74000	24000
0.74	4243	1.1	1854	6.0	GTN05 L4	—	BN71B4	M1SD4	36000	42000	64000	74000	24000
0.74	4217	2.4	1843	6.0	GTN06 L4	—	BN71B4	M1SD4	45000	51000	101000	119000	35000
0.86	3653	2.4	1597	6.0	GTN06 L4	—	BN71B4	M1SD4	45000	51000	101000	119000	35000
0.86	3629	1.1	1586	6.0	GTN04 L4	—	BN71B4	M1SD4	36000	42000	64000	74000	24000
0.86	3629	1.3	1586	6.0	GTN05 L4	—	BN71B4	M1SD4	36000	42000	64000	74000	24000
0.93	3374	3.0	1475	6.0	GTN06 L4	—	BN71B4	M1SD4	45000	51000	101000	119000	35000
1.0	3135	1.5	1370	6.0	GTN05 L4	—	BN71B4	M1SD4	36000	42000	62200	74000	23800
1.0	3074	1.2	1344	6.0	GTN04 L4	—	BN71B4	M1SD4	36000	42000	61900	74000	23700
1.1	2927	2.9	1279	6.0	GTN06 L4	—	BN71B4	M1SD4	45000	51000	99700	116100	34000
1.1	2924	1.0	1278	6.0	GTN03 L4	—	BN71B4	M1SD4	36000	41900	60900	73300	23300
1.1	2924	1.9	1278	6.0	GTN05 L4	—	BN71B4	M1SD4	36000	41900	60900	73300	23300
1.1	2908	1.3	1271	6.0	GTN04 L4	—	BN71B4	M1SD4	36000	41800	60800	73200	23200
1.2	2663	1.1	1164	6.0	GTN04 L4	—	BN71B4	M1SD4	35200	40600	59200	71300	22600
1.2	2512	0.9	1098	6.0	GTN03 L4	—	BN71B4	M1SD4	33700	38900	57000	68600	21600
1.2	2512	1.8	1098	6.0	GTN05 L4	—	BN71B4	M1SD4	34500	39800	58200	70000	22100
1.3	2338	1.0	1022	6.0	GTN01 L4	—	BN71B4	M1SD4	10700	10700	27300	31400	7040
1.3	2330	1.2	1018	6.0	GTN03 L4	—	BN71B4	M1SD4	33600	38800	56900	68500	21600
1.3	2330	1.7	1018	6.0	GTN04 L4	—	BN71B4	M1SD4	33600	38800	56900	68500	21600
1.3	2330	2.3	1018	6.0	GTN05 L4	—	BN71B4	M1SD4	33600	38800	56900	68500	21600
1.5	2156	1.1	942	6.0	GTN01 L4	—	BN71B4	M1SD4	10700	10700	27200	31300	7010
1.5	2051	1.1	896	6.0	GTN03 L4	—	BN71B4	M1SD4	32200	37200	54800	65900	20700
1.5	2051	2.1	896	6.0	GTN05 L4	—	BN71B4	M1SD4	32200	37200	54800	65900	20700
1.7	1884	1.2	824	12.0	—	GTN03 R4	BN71B4	M1SD4	31300	36200	53400	64300	20100
1.7	1884	2.2	824	12.0	—	GTN05 R4	BN71B4	M1SD4	31300	36200	53400	64300	20100
1.7	1873	1.2	819	6.0	GTN01 L4	—	BN71B4	M1SD4	10200	10200	26100	30000	6690
1.7	1867	1.5	816	6.0	GTN03 L4	—	BN71B4	M1SD4	31300	36100	53300	64100	20000
1.7	1867	2.0	816	6.0	GTN04 L4	—	BN71B4	M1SD4	31300	36100	53300	64100	20000
1.7	1867	2.9	816	6.0	GTN05 L4	—	BN71B4	M1SD4	31300	36100	53300	64100	20000
1.7	1824	1.0	797	12.0	—	GTN03 R4	BN71B4	M1SD4	31000	35800	52900	63600	19900
1.7	1824	1.9	797	12.0	—	GTN05 R4	BN71B4	M1SD4	31000	35800	52900	63600	19900
1.8	1727	1.3	755	6.0	GTN01 L4	—	BN71B4	M1SD4	9900	9900	25500	29300	6510
1.9	1643	1.3	718	6.0	GTN03 L4	—	BN71B4	M1SD4	29900	34600	51300	61700	19200
1.9	1643	2.5	718	6.0	GTN05 L4	—	BN71B4	M1SD4	29900	34600	51300	61700	19200
2.0	1606	1.6	702	6.0	GTN04 L4	—	BN71B4	M1SD4	29700	34300	50900	61300	19100
2.0	1600	1.6	699	12.0	—	GTN04 R4	BN71B4	M1SD4	29700	34300	50900	61200	19000
2.1	1508	1.4	659	12.0	—	GTN03 R4	BN71B4	M1SD4	29100	33600	50000	60100	18700
2.1	1508	2.7	659	12.0	—	GTN05 R4	BN71B4	M1SD4	29100	33600	50000	60100	18700
2.1	1486	1.6	649	6.0	GTN03 L4	—	BN71B4	M1SD4	29000	33400	49700	59800	18600
2.1	1486	2.4	649	6.0	GTN04 L4	—	BN71B4	M1SD4	29000	33400	49700	59800	18600
2.2	1410	1.5	616	6.0	GTN01 L4	—	BN71B4	M1SD4	9260	9260	24000	27600	6090
2.2	1403	1.0	613	10.0	—	GTN01 R4	BN71B4	M1SD4	9240	9240	23900	27500	6080
2.4	1297	1.9	567	12.0	—	GTN03 R4	BN71B4	M1SD4	27700	32000	47700	57400	17800

A

A

P_1 = 0.37 kW

n_2 min^{-1}	M_2 Nm	S	i	Pt kW					Rn_2 [N] LK	LS	HK/MK	HS/MS	LSH
2.4	1280	2.0	560	12.0	—	GTN04 R4	BN71B4	M1SD4	27600	31800	47600	57200	17700
2.5	1276	1.7	558	6.0	GTN01 L4	—	BN71B4	M1SD4	8950	8950	23300	26700	5890
2.5	1272	2.2	556	6.0	GTN03 L4	—	BN71B4	M1SD4	27500	31700	47500	57100	17600
2.5	1272	2.9	556	6.0	GTN04 L4	—	BN71B4	M1SD4	27500	31700	47500	57100	17600
2.6	1208	1.7	528	12.0	—	GTN03 R4	BN71B4	M1SD4	27000	31200	46700	56200	17300
2.8	1130	0.9	494	6.0	GTN00 L4	—	BN71B4	M1SD4	8400	8400	22000	25300	5520
2.8	1130	1.8	494	6.0	GTN01 L4	—	BN71B4	M1SD4	8600	8600	22400	25800	5650
2.8	1126	2.4	492	6.0	GTN03 L4	—	BN71B4	M1SD4	26400	30500	45800	55100	16900
2.8	1124	1.3	491	10.0	—	GTN01 R4	BN71B4	M1SD4	8580	8580	22400	25700	5640
3.0	1037	1.0	453	10.0	—	GTN00 R4	BN71B4	M1SD4	8350	8350	21900	25100	5490
3.0	1037	1.9	453	10.0	—	GTN01 R4	BN71B4	M1SD4	8350	8350	21900	25100	5490
3.0	1033	2.2	452	12.0	—	GTN03 R4	BN71B4	M1SD4	25700	29600	44600	53700	16500
3.1	1023	1.0	447	6.0	GTN00 L4	—	BN71B4	M1SD4	8320	8320	21800	25000	5470
3.1	1023	2.0	447	6.0	GTN01 L4	—	BN71B4	M1SD4	8320	8320	21800	25000	5470
3.1	1020	2.8	446	6.0	GTN03 L4	—	BN71B4	M1SD4	25500	29500	44400	53400	16400
3.2	1008	2.5	426	7.5	GTN04 L3	—	BN71B4	M1SD4	25200	29000	43800	52700	16100
3.3	946	2.6	414	12.0	—	GTN04 R4	BN71B4	M1SD4	24900	28800	43400	52300	16000
3.3	945	2.5	413	6.0	GTN03 L4	—	BN71B4	M1SD4	24900	28800	43400	52200	16000
3.4	922	1.5	403	6.0	GTN01 L4	—	BN71B4	M1SD4	8040	8040	21100	24300	5280
3.4	951	2.0	402	7.5	GTN03 L3	—	BN71B4	M1SD4	24700	28500	43100	51800	15800
3.5	901	1.5	394	10.0	—	GTN01 R4	BN71B4	M1SD4	7970	7970	21000	24100	5240
3.5	893	2.2	390	12.0	—	GTN03 R4	BN71B4	M1SD4	24400	28200	42700	51400	15700
3.5	920	1.8	389	7.5	GTN03 L3	—	BN71B4	M1SD4	24400	28200	42600	51300	15700
3.7	885	1.5	374	7.5	GTN01 L3	—	BN71B4	M1SD4	7840	7840	20600	23700	5150
3.8	833	2.8	364	12.0	—	GTN03 R4	BN71B4	M1SD4	23900	27600	41800	50300	15300
3.8	831	1.2	363	10.0	—	GTN00 R4	BN71B4	M1SD4	7760	7760	20500	23500	5100
3.8	831	2.4	363	10.0	—	GTN01 R4	BN71B4	M1SD4	7760	7760	20500	23500	5100
4.0	807	3.0	341	7.5	GTN04 L3	—	BN71B4	M1SD4	23400	27000	41000	49300	15000
4.1	768	3.0	336	12.0	—	GTN03 R4	BN71B4	M1SD4	23200	26800	40800	49100	14900
4.1	756	1.3	330	6.0	GTN00 L4	—	BN71B4	M1SD4	7520	7520	19900	22900	4940
4.1	756	2.5	330	6.0	GTN01 L4	—	BN71B4	M1SD4	7520	7520	19900	22900	4940
4.3	760	2.4	321	7.5	GTN03 L3	—	BN71B4	M1SD4	22900	26400	40300	48500	14700
4.4	715	2.6	313	12.0	—	GTN03 R4	BN71B4	M1SD4	22700	26200	39900	48100	14600
4.6	708	0.9	299	7.5	GTN00 L3	—	BN71B4	M1SD4	7270	7270	19300	22200	4780
4.6	708	1.8	299	7.5	GTN01 L3	—	BN71B4	M1SD4	7270	7270	19300	22200	4780
4.7	666	1.4	291	10.0	—	GTN00 R4	BN71B4	M1SD4	7210	7210	19100	22000	4740
4.7	666	2.8	291	10.0	—	GTN01 R4	BN71B4	M1SD4	7210	7210	19100	22000	4740
5.1	614	1.5	268	10.0	—	GTN00 R4	BN71B4	M1SD4	7020	7020	18700	21500	4610
5.7	567	1.1	240	7.5	GTN00 L3	—	BN71B4	M1SD4	6760	6760	18100	20800	4440
5.7	567	2.3	240	7.5	GTN01 L3	—	BN71B4	M1SD4	6760	6760	18100	20800	4440
5.8	543	1.2	237	10.0	—	GTN00 R4	BN71B4	M1SD4	6740	6740	18000	20700	4430
5.8	543	2.4	237	10.0	—	GTN01 R4	BN71B4	M1SD4	6740	6740	18000	20700	4430
6.2	523	1.7	221	7.5	GTN00 L3	—	BN71B4	M1SD4	6580	6580	17600	20300	4320
6.4	492	1.9	215	10.0	—	GTN00 R4	BN71B4	M1SD4	6520	6520	17500	20100	4280
7.1	454	1.4	192	7.5	GTN00 L3	—	BN71B4	M1SD4	6280	6280	16900	19400	4130
7.1	454	2.9	192	7.5	GTN01 L3	—	BN71B4	M1SD4	6280	6280	16900	19400	4130
7.7	419	2.1	177	7.5	GTN00 L3	—	BN71B4	M1SD4	6110	6110	16500	19000	4020
7.8	401	2.2	175	10.0	—	GTN00 R4	BN71B4	M1SD4	6090	6090	16500	18900	4000
8.6	363	2.4	159	10.0	—	GTN00 R4	BN71B4	M1SD4	5890	5890	16000	18300	3870
9.6	328	2.0	143	10.0	—	GTN00 R4	BN71B4	M1SD4	5690	5690	15500	17800	3740
9.7	336	2.6	142	7.5	GTN00 L3	—	BN71B4	M1SD4	5670	5670	15400	17700	3730
10.3	314	1.7	133	12.0	—	GTN00 R3	BN71B4	M1SD4	5550	5550	15100	17400	3650
10.5	310	2.8	131	7.5	GTN00 L3	—	BN71B4	M1SD4	5520	5520	15100	17300	3630
10.6	297	2.9	130	10.0	—	GTN00 R4	BN71B4	M1SD4	5510	5510	15000	17300	3620
11.8	274	2.4	116	7.5	GTN00 L3	—	BN71B4	M1SD4	5300	5300	14500	16700	3490
12.9	252	2.6	106	12.0	—	GTN00 R3	BN71B4	M1SD4	5160	5160	14200	16300	3390

P_1 = 0.55 kW

n_2 min^{-1}	M_2 Nm	S	i	Pt kW					Rn_2 [N] LK	LS	HK/MK	HS/MS	LSH
0.57	8101	1.4	2423	7.5	GTN07 L4	—	BN80A4	M1LA4	52000	65000	109000	145000	45000
0.57	8101	2.1	2423	7.5	GTN09 L4	—	BN80A4	—	—	—	110000	145000	36000
0.67	6934	1.0	2074	6.0	GTN06 L4	—	BN80A4	M1LA4	45000	51000	101000	119000	35000

P_1 = 0.55 kW

n_2 min^{-1}	M_2 Nm	S	i	Pt kW					Rn_2 [N] LK	LS	HK/MK	HS/MS	LSH
0.68	6826	2.1	2041	7.5	GTN07 L4	—	BN80A4	M1LA4	52000	65000	109000	145000	45000
0.69	6697	2.5	2003	7.5	GTN09 L4	—	BN80A4	—	—	—	110000	145000	36000
0.75	6164	1.6	1843	6.0	GTN06 L4	—	BN80A4	M1LA4	45000	51000	101000	119000	35000
0.79	5910	2.7	1767	7.5	GTN07 L4	—	BN80A4	M1LA4	52000	65000	109000	145000	45000
0.81	5761	3.0	1723	7.5	GTN09 L4	—	BN80A4	—	—	—	110000	145000	36000
0.87	5339	1.6	1597	6.0	GTN06 L4	—	BN80A4	M1LA4	45000	51000	101000	119000	35000
0.87	5319	2.8	1591	7.5	GTN07 L4	—	BN80A4	M1LA4	52000	65000	109000	145000	45000
0.94	4931	2.0	1475	6.0	GTN06 L4	—	BN80A4	M1LA4	45000	51000	101000	119000	35000
1.0	4582	1.0	1370	6.0	GTN05 L4	—	BN80A4	M1LA4	36000	42000	62200	74000	23800
1.1	4278	2.0	1279	6.0	GTN06 L4	—	BN80A4	M1LA4	45000	51000	99700	116100	34000
1.1	4274	1.3	1278	6.0	GTN05 L4	—	BN80A4	M1LA4	36000	41900	60900	73300	23300
1.1	4262	2.9	1274	7.5	GTN07 L4	—	BN80A4	M1LA4	50200	63000	107100	140400	43600
1.1	4250	0.9	1271	6.0	GTN04 L4	—	BN80A4	M1LA4	36000	41800	60800	73200	23200
1.3	3671	1.2	1098	6.0	GTN05 L4	—	BN80A4	M1LA4	34500	39800	58200	70000	22100
1.3	3660	2.1	1095	6.0	GTN06 L4	—	BN80A4	M1LA4	42900	48600	95200	110800	32200
1.4	3406	1.1	1018	6.0	GTN04 L4	—	BN80A4	M1LA4	33600	38800	56900	68500	21600
1.4	3406	1.6	1018	6.0	GTN05 L4	—	BN80A4	M1LA4	33600	38800	56900	68500	21600
1.4	3394	2.8	1015	6.0	GTN06 L4	—	BN80A4	M1LA4	41900	47400	93000	108300	31400
1.6	2997	1.4	896	6.0	GTN05 L4	—	BN80A4	M1LA4	32200	37200	54800	65900	20700
1.6	2933	2.6	877	6.0	GTN06 L4	—	BN80A4	M1LA4	39900	45200	89000	103700	29900
1.7	2776	2.3	830	12.0	—	GTN06 R4	BN80A4	M1LA4	39100	44300	87600	102000	29400
1.7	2754	1.5	824	12.0	—	GTN05 R4	BN80A4	M1LA4	31300	36200	53400	64300	20100
1.7	2729	1.0	816	6.0	GTN03 L4	—	BN80A4	M1LA4	31300	36100	53300	64100	20000
1.7	2729	1.4	816	6.0	GTN04 L4	—	BN80A4	M1LA4	31300	36100	53300	64100	20000
1.7	2729	2.0	816	6.0	GTN05 L4	—	BN80A4	M1LA4	31300	36100	53300	64100	20000
1.7	2705	2.8	809	6.0	GTN06 L4	—	BN80A4	M1LA4	38800	44000	86900	101200	29200
1.7	2665	1.3	797	12.0	—	GTN05 R4	BN80A4	M1LA4	31000	35800	52900	63600	19900
1.9	2401	1.7	718	6.0	GTN05 L4	—	BN80A4	M1LA4	29900	34600	51300	61700	19200
2.0	2347	1.1	702	6.0	GTN04 L4	—	BN80A4	M1LA4	29700	34300	50900	61300	19100
2.0	2339	1.1	699	12.0	—	GTN04 R4	BN80A4	M1LA4	29700	34300	50900	61200	19000
2.1	2225	2.7	665	12.0	—	GTN06 R4	BN80A4	M1LA4	36400	41200	82000	95400	27300
2.1	2203	1.0	659	12.0	—	GTN03 R4	BN80A4	M1LA4	29100	33600	50000	60100	18700
2.1	2203	1.8	659	12.0	—	GTN05 R4	BN80A4	M1LA4	29100	33600	50000	60100	18700
2.1	2172	1.1	649	6.0	GTN03 L4	—	BN80A4	M1LA4	29000	33400	49700	59800	18600
2.1	2172	1.6	649	6.0	GTN04 L4	—	BN80A4	M1LA4	29000	33400	49700	59800	18600
2.1	2172	2.1	649	6.0	GTN05 L4	—	BN80A4	M1LA4	29000	33400	49700	59800	18600
2.3	2061	1.0	616	6.0	GTN01 L4	—	BN80A4	M1LA4	9260	9260	24000	27600	6090
2.5	1895	1.3	567	12.0	—	GTN03 R4	BN80A4	M1LA4	27700	32000	47700	57400	17800
2.5	1895	2.6	567	12.0	—	GTN05 R4	BN80A4	M1LA4	27700	32000	47700	57400	17800
2.5	1871	1.4	560	12.0	—	GTN04 R4	BN80A4	M1LA4	27600	31800	47600	57200	17700
2.5	1865	1.1	558	6.0	GTN01 L4	—	BN80A4	M1LA4	8950	8950	23300	26700	5890
2.5	1860	1.5	556	6.0	GTN03 L4	—	BN80A4	M1LA4	27500	31700	47500	57100	17600
2.5	1860	2.0	556	6.0	GTN04 L4	—	BN80A4	M1LA4	27500	31700	47500	57100	17600
2.5	1860	3.0	556	6.0	GTN05 L4	—	BN80A4	M1LA4	27500	31700	47500	57100	17600
2.6	1765	1.1	528	12.0	—	GTN03 R4	BN80A4	M1LA4	27000	31200	46700	56200	17300
2.6	1765	2.2	528	12.0	—	GTN05 R4	BN80A4	M1LA4	27000	31200	46700	56200	17300
2.8	1651	1.3	494	6.0	GTN01 L4	—	BN80A4	M1LA4	8600	8600	22400	25800	5650
2.8	1646	1.6	492	6.0	GTN03 L4	—	BN80A4	M1LA4	26400	30500	45800	55100	16900
2.8	1646	2.3	492	6.0	GTN04 L4	—	BN80A4	M1LA4	26400	30500	45800	55100	16900
3.1	1515	1.3	453	10.0	—	GTN01 R4	BN80A4	M1LA4	8350	8350	21900	25100	5490
3.1	1510	1.5	452	12.0	—	GTN03 R4	BN80A4	M1LA4	25700	29600	44600	53700	16500
3.1	1510	2.4	452	12.0	—	GTN04 R4	BN80A4	M1LA4	25700	29600	44600	53700	16500
3.1	1495	1.4	447	6.0	GTN01 L4	—	BN80A4	M1LA4	8320	8320	21800	25000	5470
3.1	1490	1.9	446	6.0	GTN03 L4	—	BN80A4	M1LA4	25500	29500	44400	53400	16400
3.1	1490	2.5	446	6.0	GTN04 L4	—	BN80A4	M1LA4	25500	29500	44400	53400	16400
3.3	1473	1.7	426	7.5	GTN04 L3	—	BN80A4	M1LA4	25200	29000	43800	52700	16100
3.4	1383	1.8	414	12.0	—	GTN04 R4	BN80A4	M1LA4	24900	28800	43400	52300	16000
3.4	1382	1.7	413	6.0	GTN03 L4	—	BN80A4	M1LA4	24900	28800	43400	52200	16000
3.4	1382	2.2	413	6.0	GTN04 L4	—	BN80A4	M1LA4	24900	28800	43400	52200	16000
3.4	1348	1.0	403	6.0	GTN01 L4	—	BN80A4	M1LA4	8040	8040	21100	24300	5280
3.5	1389	1.4	402	7.5	GTN03 L3	—	BN80A4	M1LA4	24700	28500	43100	51800	15800
3.5	1389	2.7	402	7.5	GTN05 L3	—	BN80A4	M1LA4	24700	28500	43100	51800	15800
3.5	1316	1.0	394	10.0	—	GTN01 R4	BN80A4	M1LA4	7970	7970	21000	24100	5240
3.6	1305	1.5	390	12.0	—	GTN03 R4	BN80A4	M1LA4	24400	28200	42700	51400	15700
3.6	1305	2.9	390	12.0	—	GTN05 R4	BN80A4	M1LA4	24400	28200	42700	51400	15700
3.6	1344	1.3	389	7.5	GTN03 L3	—	BN80A4	M1LA4	24400	28200	42600	51300	15700
3.6	1344	2.4	389	7.5	GTN05 L3	—	BN80A4	M1LA4	24400	28200	42600	51300	15700

A

A

P_1 = 0.55 kW

n_2 min^{-1}	M_2 Nm	S	i	Pt kW					Rn_2 [N] LK	LS	HK/MK	HS/MS	LSH
3.7	1293	1.0	374	7.5	GTN01 L3	—	BN80A4	M1LA4	7840	7840	20600	23700	5150
3.8	1217	1.9	364	12.0	—	GTN03 R4	BN80A4	M1LA4	23900	27600	41800	50300	15300
3.8	1217	2.4	364	12.0	—	GTN04 R4	BN80A4	M1LA4	23900	27600	41800	50300	15300
3.8	1214	1.6	363	10.0	—	GTN01 R4	BN80A4	M1LA4	7760	7760	20500	23500	5100
4.1	1180	2.1	341	7.5	GTN04 L3	—	BN80A4	M1LA4	23400	27000	41000	49300	15000
4.1	1129	2.1	338	12.0	—	GTN04 R4	BN80A4	M1LA4	23300	26900	40900	49200	14900
4.1	1122	2.0	336	12.0	—	GTN03 R4	BN80A4	M1LA4	23200	26800	40800	49100	14900
4.2	1105	1.7	330	6.0	GTN01 L4	—	BN80A4	M1LA4	7520	7520	19900	22900	4940
4.3	1111	1.7	321	7.5	GTN03 L3	—	BN80A4	M1LA4	22900	26400	40300	48500	14700
4.4	1045	1.8	313	12.0	—	GTN03 R4	BN80A4	M1LA4	22700	26200	39900	48100	14600
4.6	1034	1.3	299	7.5	GTN01 L3	—	BN80A4	M1LA4	7270	7270	19300	22200	4780
4.8	973	1.0	291	10.0	—	GTN00 R4	BN80A4	M1LA4	7210	7210	19100	22000	4740
4.8	973	1.9	291	10.0	—	GTN01 R4	BN80A4	M1LA4	7210	7210	19100	22000	4740
4.8	970	2.7	290	12.0	—	GTN03 R4	BN80A4	M1LA4	22100	25600	39100	47000	14200
5.0	956	2.3	276	7.5	GTN03 L3	—	BN80A4	M1LA4	21800	25200	38500	46300	14000
5.1	944	2.5	273	7.5	GTN04 L3	—	BN80A4	M1LA4	21700	25000	38300	46100	13900
5.2	897	1.0	268	10.0	—	GTN00 R4	BN80A4	M1LA4	7020	7020	18700	21500	4610
5.2	897	2.1	268	10.0	—	GTN01 R4	BN80A4	M1LA4	7020	7020	18700	21500	4610
5.4	891	2.1	258	7.5	GTN03 L3	—	BN80A4	M1LA4	21300	24600	37700	45300	13600
5.4	853	2.2	255	12.0	—	GTN03 R4	BN80A4	M1LA4	21200	24500	37600	45200	13600
5.8	829	1.6	240	7.5	GTN01 L3	—	BN80A4	M1LA4	6760	6760	18100	20800	4440
5.9	794	1.6	237	10.0	—	GTN01 R4	BN80A4	M1LA4	6740	6740	18000	20700	4430
6.0	772	2.4	231	12.0	—	GTN03 R4	BN80A4	M1LA4	20500	23700	36500	43900	13200
6.3	764	1.2	221	7.5	GTN00 L3	—	BN80A4	M1LA4	6580	6580	17600	20300	4320
6.3	764	2.3	221	7.5	GTN01 L3	—	BN80A4	M1LA4	6580	6580	17600	20300	4320
6.3	762	3.0	220	7.5	GTN03 L3	—	BN80A4	M1LA4	20200	23300	36000	43300	13000
6.5	719	1.3	215	10.0	—	GTN00 R4	BN80A4	M1LA4	6520	6520	17500	20100	4280
6.5	719	2.5	215	10.0	—	GTN01 R4	BN80A4	M1LA4	6520	6520	17500	20100	4280
7.2	664	1.0	192	7.5	GTN00 L3	—	BN80A4	M1LA4	6280	6280	16900	19400	4130
7.2	664	2.0	192	7.5	GTN01 L3	—	BN80A4	M1LA4	6280	6280	16900	19400	4130
7.3	658	2.8	190	7.5	GTN03 L3	—	BN80A4	M1LA4	19200	22200	34400	41400	12300
7.8	612	1.4	177	7.5	GTN00 L3	—	BN80A4	M1LA4	6110	6110	16500	19000	4020
7.8	612	2.9	177	7.5	GTN01 L3	—	BN80A4	M1LA4	6110	6110	16500	19000	4020
7.9	587	1.5	175	10.0	—	GTN00 R4	BN80A4	M1LA4	6090	6090	16500	18900	4000
8.8	531	1.6	159	10.0	—	GTN00 R4	BN80A4	M1LA4	5890	5890	16000	18300	3870
9.7	479	1.4	143	10.0	—	GTN00 R4	BN80A4	M1LA4	5690	5690	15500	17800	3740
9.7	479	2.7	143	10.0	—	GTN00 R4	BN80A4	M1LA4	5690	5690	15500	17800	3740
9.8	491	1.8	142	7.5	GTN00 L3	—	BN80A4	M1LA4	5670	5670	15400	17700	3730
10.5	459	1.2	133	12.0	—	GTN00 R3	BN80A4	M1LA4	5420	5420	14800	17000	3570
10.5	459	2.5	133	12.0	—	GTN01 R3	BN80A4	M1LA4	5550	5550	15100	17400	3650
10.6	453	1.9	131	7.5	GTN00 L3	—	BN80A4	M1LA4	5520	5520	15100	17300	3630
10.7	434	2.0	130	10.0	—	GTN00 R4	BN80A4	M1LA4	5510	5510	15000	17300	3620
12.0	401	1.6	116	7.5	GTN00 L3	—	BN80A4	M1LA4	5300	5300	14500	16700	3490
13.1	368	1.8	106	12.0	—	GTN00 R3	BN80A4	M1LA4	5160	5160	14200	16300	3390
13.1	354	2.4	106	10.0	—	GTN00 R4	BN80A4	M1LA4	5150	5150	14100	16200	3380
13.3	363	2.4	105	7.5	GTN00 L3	—	BN80A4	M1LA4	5130	5130	14100	16200	3370
16.2	296	2.9	85.6	7.5	GTN00 L3	—	BN80A4	M1LA4	4790	4790	13300	15200	3150
16.3	294	2.2	85.2	12.0	—	GTN00 R3	BN80A4	M1LA4	4790	4790	13200	15200	3150
19.9	242	2.7	69.9	7.5	GTN00 L3	—	BN80A4	M1LA4	4480	4480	12500	14300	2950
20.4	236	2.8	68.2	12.0	—	GTN00 R3	BN80A4	M1LA4	4440	4440	12400	14200	2920
21.5	231	2.4	64.8	7.5	GTN00 L2	—	BN80A4	M1LA4	4370	4370	12200	14000	2870

P_1 = 0.75 kW

n_2 min^{-1}	M_2 Nm	S	i	Pt kW					Rn_2 [N] LK	LS	HK/MK	HS/MS	LSH
0.55	11325	2.3	2523	11.0	GTN10 L4	—	BN80B4	—	—	—	133000	166000	65000
0.58	10872	1.0	2423	7.5	GTN07 L4	—	BN80B4	M2SA4	52000	65000	109000	145000	45000
0.58	10872	1.6	2423	7.5	GTN09 L4	—	BN80B4	—	—	—	110000	145000	36000
0.69	9161	1.6	2041	7.5	GTN07 L4	—	BN80B4	M2SA4	52000	65000	109000	145000	45000
0.69	9075	2.9	2022	11.0	GTN10 L4	—	BN80B4	—	—	—	133000	166000	65000
0.70	8988	1.9	2003	7.5	GTN09 L4	—	BN80B4	—	—	—	110000	145000	36000
0.76	8272	1.2	1843	6.0	GTN06 L4	—	BN80B4	M2SA4	45000	51000	101000	119000	35000
0.79	7932	2.0	1767	7.5	GTN07 L4	—	BN80B4	M2SA4	52000	65000	109000	145000	45000

P_1 = 0.75 kW

n_2 min^{-1}	M_2 Nm	S	i	Pt kW					Rn_2 [N] LK	LS	HK/MK	HS/MS	LSH
0.81	7731	2.2	1723	7.5	GTN09 L4	—	BN80B4	—	—	—	110000	145000	36000
0.87	7202	2.4	1605	7.5	GTN09 L4	—	BN80B4	—	—	—	110000	145000	36000
0.88	7166	1.2	1597	6.0	GTN06 L4	—	BN80B4	M2SA4	45000	51000	101000	119000	35000
0.88	7138	2.1	1591	7.5	GTN07 L4	—	BN80B4	M2SA4	52000	65000	109000	145000	45000
0.95	6618	1.5	1475	6.0	GTN06 L4	—	BN80B4	M2SA4	45000	51000	101000	119000	35000
0.99	6320	2.5	1408	7.5	GTN07 L4	—	BN80B4	M2SA4	51900	65000	109000	144700	45000
1.0	6195	2.7	1380	7.5	GTN09 L4	—	BN80B4	—	—	—	110000	143800	35800
1.1	5771	2.9	1286	7.5	GTN09 L4	—	BN80B4	—	—	—	109200	140800	35000
1.1	5742	1.5	1279	6.0	GTN06 L4	—	BN80B4	M2SA4	45000	51000	99700	116100	34000
1.1	5736	1.0	1278	6.0	GTN05 L4	—	BN80B4	M2SA4	36000	41900	60900	73300	23300
1.1	5720	2.2	1274	7.5	GTN07 L4	—	BN80B4	M2SA4	50200	63000	107100	140400	43600
1.2	5191	2.7	1157	7.5	GTN07 L4	—	BN80B4	M2SA4	48600	60900	104100	136400	42200
1.3	4927	0.9	1098	6.0	GTN05 L4	—	BN80B4	M2SA4	33700	38900	57000	68600	21600
1.3	4912	1.6	1095	6.0	GTN06 L4	—	BN80B4	M2SA4	42900	48600	95200	110800	32200
1.4	4571	1.2	1018	6.0	GTN05 L4	—	BN80B4	M2SA4	33600	38800	56900	68500	21600
1.4	4555	2.1	1015	6.0	GTN06 L4	—	BN80B4	M2SA4	41900	47400	93000	108300	31400
1.6	4022	1.1	896	7.5	GTN05 L4	—	BN80B4	M2SA4	46300	58000	99600	130500	40200
1.6	3936	2.0	877	6.0	GTN06 L4	—	BN80B4	M2SA4	39900	45200	89000	103700	29900
1.7	3726	1.7	830	12.0	—	GTN06 R4	BN80B4	M2SA4	39100	44300	87600	102000	29400
1.7	3696	1.1	824	12.0	—	GTN05 R4	BN80B4	M2SA4	31300	36200	53400	64300	20100
1.7	3663	1.0	816	6.0	GTN04 L4	—	BN80B4	M2SA4	31300	36100	53300	64100	20000
1.7	3663	1.5	816	6.0	GTN06 L4	—	BN80B4	M2SA4	31300	36100	53300	64100	20000
1.7	3630	2.1	809	6.0	GTN06 L4	—	BN80B4	M2SA4	38800	44000	86900	101200	29200
1.8	3577	1.0	797	12.0	—	GTN05 R4	BN80B4	M2SA4	31000	35800	52900	63600	19900
1.9	3223	1.3	718	6.0	GTN05 L4	—	BN80B4	M2SA4	29900	34600	51300	61700	19200
2.1	2986	2.0	665	12.0	—	GTN06 R4	BN80B4	M2SA4	36400	41200	82000	95400	27300
2.1	2957	1.4	659	12.0	—	GTN05 R4	BN80B4	M2SA4	29100	33600	50000	60100	18700
2.2	2915	1.2	649	6.0	GTN04 L4	—	BN80B4	M2SA4	29000	33400	49700	59800	18600
2.2	2915	1.5	649	6.0	GTN05 L4	—	BN80B4	M2SA4	29000	33400	49700	59800	18600
2.5	2544	1.0	567	12.0	—	GTN03 R4	BN80B4	M2SA4	27700	32000	47700	57400	17800
2.5	2544	1.9	567	12.0	—	GTN05 R4	BN80B4	M2SA4	27700	32000	47700	57400	17800
2.5	2511	1.0	560	12.0	—	GTN04 R4	BN80B4	M2SA4	27600	31800	47600	57200	17700
2.5	2496	1.1	556	6.0	GTN03 L4	—	BN80B4	M2SA4	27500	31700	47500	57100	17600
2.5	2496	1.5	556	6.0	GTN04 L4	—	BN80B4	M2SA4	27500	31700	47500	57100	17600
2.5	2496	2.2	556	6.0	GTN05 L4	—	BN80B4	M2SA4	27500	31700	47500	57100	17600
2.5	2468	2.9	550	12.0	—	GTN06 R4	BN80B4	M2SA4	34100	38700	77400	90100	25600
2.7	2369	1.7	528	12.0	—	GTN05 R4	BN80B4	M2SA4	27000	31200	46700	56200	17300
2.8	2216	0.9	494	6.0	GTN01 L4	—	BN80B4	M2SA4	8400	8400	22000	25300	5520
2.8	2209	1.2	492	6.0	GTN03 L4	—	BN80B4	M2SA4	26400	30500	45800	55100	16900
2.8	2209	1.7	492	6.0	GTN04 L4	—	BN80B4	M2SA4	26400	30500	45800	55100	16900
2.8	2209	2.4	492	6.0	GTN05 L4	—	BN80B4	M2SA4	26400	30500	45800	55100	16900
3.1	2033	0.9	453	10.0	—	GTN01 R4	BN80B4	M2SA4	8350	8350	21900	25100	5490
3.1	2027	1.1	452	12.0	—	GTN03 R4	BN80B4	M2SA4	25700	29600	44600	53700	16500
3.1	2027	1.8	452	12.0	—	GTN04 R4	BN80B4	M2SA4	25700	29600	44600	53700	16500
3.1	2027	2.3	452	12.0	—	GTN05 R4	BN80B4	M2SA4	25700	29600	44600	53700	16500
3.1	2006	1.0	447	6.0	GTN01 L4	—	BN80B4	M2SA4	8320	8320	21800	25000	5470
3.1	2000	1.4	446	6.0	GTN03 L4	—	BN80B4	M2SA4	25500	29500	44400	53400	16400
3.1	2000	1.9	446	6.0	GTN04 L4	—	BN80B4	M2SA4	25500	29500	44400	53400	16400
3.1	2000	2.7	446	6.0	GTN05 L4	—	BN80B4	M2SA4	25500	29500	44400	53400	16400
3.3	1976	1.2	426	7.5	GTN04 L3	—	BN80B4	M2SA4	25200	29000	43800	52700	16100
3.4	1856	1.3	414	12.0	—	GTN04 R4	BN80B4	M2SA4	24900	28800	43400	52300	16000
3.4	1855	1.3	413	6.0	GTN03 L4	—	BN80B4	M2SA4	24900	28800	43400	52200	16000
3.4	1855	1.6	413	6.0	GTN04 L4	—	BN80B4	M2SA4	24900	28800	43400	52200	16000
3.4	1855	2.5	413	6.0	GTN05 L4	—	BN80B4	M2SA4	24900	28800	43400	52200	16000
3.5	1865	1.0	402	7.5	GTN03 L3	—	BN80B4	M2SA4	24700	28500	43100	51800	15800
3.5	1865	2.0	402	7.5	GTN05 L3	—	BN80B4	M2SA4	24700	28500	43100	51800	15800
3.6	1751	1.1	390	12.0	—	GTN03 R4	BN80B4	M2SA4	24400	28200	42700	51400	15700
3.6	1751	2.1	390	12.0	—	GTN05 R4	BN80B4	M2SA4	24400	28200	42700	51400	15700
3.6	1804	0.9	389	7.5	GTN03 L3	—	BN80B4	M2SA4	24400	28200	42600	51300	15700
3.6	1804	1.8	389	7.5	GTN05 L3	—	BN80B4	M2SA4	24400	28200	42600	51300	15700
3.8	1633	1.4	364	12.0	—	GTN03 R4	BN80B4	M2SA4	23900	27600	41800	50300	15300
3.8	1633	1.8	364	12.0	—	GTN04 R4	BN80B4	M2SA4	23900	27600	41800	50300	15300
3.8	1633	2.8	364	12.0	—	GTN05 R4	BN80B4	M2SA4	23900	27600	41800	50300	15300
3.9	1629	1.2	363	10.0	—	GTN01 R4	BN80B4	M2SA4	7760	7760	20500	23500	5100
4.1	1584	1.5	341	7.5	GTN04 L3	—	BN80B4	M2SA4	23400	27000	41000	49300	15000
4.1	1515	1.6	338	12.0	—	GTN04 R4	BN80B4	M2SA4	23300	26900	40900	49200	14900
4.2	1506	1.5	336	12.0	—	GTN03 R4	BN80B4	M2SA4	23200	26800	40800	49100	14900

A

A

P_1 = 0.75 kW

n_2 min^{-1}	M_2 Nm	S	i	Pt kW					Rn_2 [N] LK	LS	HK/MK	HS/MS	LSH
4.2	1482	1.3	330	12.0	**GTN01 L4**	—	**BN80B4**	**M2SA4**	23200	26800	40800	49100	14900
4.4	1492	1.2	321	7.5	**GTN03 L3**	—	**BN80B4**	**M2SA4**	22900	26400	40300	48500	14700
4.4	1492	2.4	321	7.5	**GTN05 L3**	—	**BN80B4**	**M2SA4**	22900	26400	40300	48500	14700
4.5	1403	1.3	313	12.0	—	**GTN03 R4**	**BN80B4**	**M2SA4**	22700	26200	39900	48100	14600
4.5	1403	2.6	313	12.0	—	**GTN05 R4**	**BN80B4**	**M2SA4**	22700	26200	39900	48100	14600
4.6	1376	2.5	307	12.0	—	**GTN04 R4**	**BN80B4**	**M2SA4**	22500	26000	39700	47800	14500
4.7	1388	0.9	299	7.5	**GTN01 L3**	—	**BN80B4**	**M2SA4**	7270	7270	19300	22200	4780
4.8	1305	1.4	291	10.0	—	**GTN01 R4**	**BN80B4**	**M2SA4**	7210	7210	19100	22000	4740
4.8	1301	2.0	290	12.0	—	**GTN03 R4**	**BN80B4**	**M2SA4**	22100	25600	39100	47000	14200
4.8	1301	2.8	290	12.0	—	**GTN04 R4**	**BN80B4**	**M2SA4**	22100	25600	39100	47000	14200
5.1	1283	1.7	276	7.5	**GTN03 L3**	—	**BN80B4**	**M2SA4**	21800	25200	38500	46300	14000
5.1	1267	1.9	273	7.5	**GTN04 L3**	—	**BN80B4**	**M2SA4**	21700	25000	38300	46100	13900
5.2	1204	1.6	268	10.0	—	**GTN01 R4**	**BN80B4**	**M2SA4**	7020	7020	18700	21500	4610
5.4	1195	1.5	258	7.5	**GTN03 L3**	—	**BN80B4**	**M2SA4**	21300	24600	37700	45300	13600
5.5	1145	1.6	255	12.0	—	**GTN03 R4**	**BN80B4**	**M2SA4**	21200	24500	37600	45200	13600
5.8	1112	1.2	240	7.5	**GTN01 L3**	—	**BN80B4**	**M2SA4**	6760	6760	18100	20800	4440
5.9	1066	1.2	237	10.0	—	**GTN01 R4**	**BN80B4**	**M2SA4**	6740	6740	18000	20700	4430
6.1	1037	1.8	231	12.0	—	**GTN03 R4**	**BN80B4**	**M2SA4**	20500	23700	36500	43900	13200
6.3	1026	1.7	221	7.5	**GTN01 L3**	—	**BN80B4**	**M2SA4**	6580	6580	17600	20300	4320
6.4	1023	2.2	220	7.5	**GTN03 L3**	—	**BN80B4**	**M2SA4**	20200	23300	36000	43300	13000
6.5	965	0.9	215	10.0	—	**GTN00 R4**	**BN80B4**	**M2SA4**	6370	6370	17100	19700	4190
6.5	965	1.9	215	10.0	—	**GTN01 R4**	**BN80B4**	**M2SA4**	6520	6520	17500	20100	4280
6.5	962	2.8	214	12.0	—	**GTN03 R4**	**BN80B4**	**M2SA4**	20000	23100	35700	42900	12800
6.9	936	2.6	202	7.5	**GTN04 L3**	—	**BN80B4**	**M2SA4**	19600	22600	35000	42100	12600
7.3	891	1.5	192	7.5	**GTN01 L3**	—	**BN80B4**	**M2SA4**	6280	6280	16900	19400	4130
7.4	883	2.1	190	7.5	**GTN03 L3**	—	**BN80B4**	**M2SA4**	19200	22200	34400	41400	12300
7.6	830	2.8	185	12.0	—	**GTN03 R4**	**BN80B4**	**M2SA4**	19100	22000	34100	41100	12200
7.9	824	2.7	178	7.5	**GTN03 L3**	—	**BN80B4**	**M2SA4**	18800	21700	33700	40600	12100
7.9	822	1.1	177	7.5	**GTN00 L3**	—	**BN80B4**	**M2SA4**	6110	6110	16500	19000	4020
7.9	822	2.2	177	7.5	**GTN01 L3**	—	**BN80B4**	**M2SA4**	6110	6110	16500	19000	4020
8.0	787	1.1	175	10.0	—	**GTN00 R4**	**BN80B4**	**M2SA4**	6090	6090	16500	18900	4000
8.0	787	2.2	175	10.0	—	**GTN01 R4**	**BN80B4**	**M2SA4**	6090	6090	16500	18900	4000
8.6	760	2.9	164	7.5	**GTN03 L3**	—	**BN80B4**	**M2SA4**	18300	21100	32900	39600	11700
8.8	713	1.2	159	10.0	—	**GTN00 R4**	**BN80B4**	**M2SA4**	5890	5890	16000	18300	3870
8.8	713	2.4	159	10.0	—	**GTN01 R4**	**BN80B4**	**M2SA4**	5890	5890	16000	18300	3870
9.2	708	2.6	152	7.5	**GTN03 L3**	—	**BN80B4**	**M2SA4**	17900	20600	32200	38700	11500
9.8	643	1.0	143	10.0	—	**GTN00 R4**	**BN80B4**	**M2SA4**	5690	5690	15500	17800	3740
9.8	643	2.0	143	10.0	—	**GTN01 R4**	**BN80B4**	**M2SA4**	5690	5690	15500	17800	3740
9.9	659	1.3	142	7.5	**GTN00 L3**	—	**BN80B4**	**M2SA4**	5670	5670	15400	17700	3730
9.9	659	2.6	142	7.5	**GTN01 L3**	—	**BN80B4**	**M2SA4**	5670	5670	15400	17700	3730
10.5	617	1.9	133	12.0	—	**GTN01 R3**	**BN80B4**	**M2SA4**	5550	5550	15100	17400	3650
10.7	607	1.4	131	7.5	**GTN00 L3**	—	**BN80B4**	**M2SA4**	5520	5520	15100	17300	3630
10.7	607	2.8	131	7.5	**GTN01 L3**	—	**BN80B4**	**M2SA4**	5520	5520	15100	17300	3630
10.8	582	1.5	130	10.0	—	**GTN00 R4**	**BN80B4**	**M2SA4**	5510	5510	15000	17300	3620
10.8	582	3.0	130	10.0	—	**GTN01 R4**	**BN80B4**	**M2SA4**	5510	5510	15000	17300	3620
12.1	538	1.2	116	7.5	**GTN00 L3**	—	**BN80B4**	**M2SA4**	5300	5300	14500	16700	3490
12.1	538	2.4	116	7.5	**GTN01 L3**	—	**BN80B4**	**M2SA4**	5300	5300	14500	16700	3490
13.2	494	1.3	106	12.0	—	**GTN00 R3**	**BN80B4**	**M2SA4**	5160	5160	14200	16300	3390
13.2	494	2.6	106	12.0	—	**GTN01 R3**	**BN80B4**	**M2SA4**	5160	5160	14200	16300	3390
13.2	475	1.8	106	10.0	—	**GTN00 R4**	**BN80B4**	**M2SA4**	5150	5150	14100	16200	3380
13.4	487	1.8	105	7.5	**GTN00 L3**	—	**BN80B4**	**M2SA4**	5130	5130	14100	16200	3370
16.4	397	2.1	85.6	7.5	**GTN00 L3**	—	**BN80B4**	**M2SA4**	4790	4790	13300	15200	3150
16.4	395	1.6	85.2	12.0	—	**GTN00 R3**	**BN80B4**	**M2SA4**	4790	4790	13200	15200	3150
17.8	365	2.3	78.7	12.0	—	**GTN00 R3**	**BN80B4**	**M2SA4**	4660	4660	12900	14900	3060
18.1	360	2.4	77.5	7.5	**GTN00 L3**	—	**BN80B4**	**M2SA4**	4640	4640	12900	14800	3050
20.0	324	2.0	69.9	7.5	**GTN00 L3**	—	**BN80B4**	**M2SA4**	4480	4480	12500	14300	2950
20.5	317	2.1	68.2	12.0	—	**GTN00 R3**	**BN80B4**	**M2SA4**	4440	4440	12400	14200	2920
21.6	311	1.8	64.8	7.5	**GTN00 L2**	—	**BN80B4**	**M2SA4**	4370	4370	12200	14000	2870
22.1	294	2.9	63.2	7.5	**GTN00 L3**	—	**BN80B4**	**M2SA4**	4330	4330	12100	13900	2850
22.2	292	2.9	62.9	12.0	—	**GTN00 R3**	**BN80B4**	**M2SA4**	4330	4330	12100	13900	2840
27.0	249	2.6	51.9	7.5	**GTN00 L2**	—	**BN80B4**	**M2SA4**	4060	4060	11400	13100	2670

P_1 = 1.1 kW

n_2 min^{-1}	M_2 Nm	S	i	Pt kW					Rn_2 [N] LK	LS	HK/MK	HS/MS	LSH
0.55	16877	1.5	2523	11.0	GTN10 L4	—	BN90S4	—	—	—	133000	166000	65000
0.57	16202	1.0	2423	7.5	GTN09 L4	—	BN90S4	—	—	—	110000	145000	36000
0.66	14021	2.4	2096	11.0	GTN11 L4	—	BN90S4	—	—	—	157000	195000	65000
0.68	13652	1.0	2041	7.5	GTN07 L4	—	BN90S4	M2SB4	52000	65000	109000	145000	45000
0.69	13523	1.9	2022	11.0	GTN10 L4	—	BN90S4	—	—	—	133000	166000	65000
0.69	13394	1.3	2003	7.5	GTN09 L4	—	BN90S4	—	—	—	110000	145000	36000
0.77	12001	2.2	1794	11.0	GTN10 L4	—	BN90S4	—	—	—	133000	166000	65000
0.79	11820	1.3	1767	7.5	GTN07 L4	—	BN90S4	M2SB4	52000	65000	109000	145000	45000
0.81	11521	1.5	1723	7.5	GTN09 L4	—	BN90S4	—	—	—	110000	145000	36000
0.83	11179	2.3	1672	11.0	GTN10 L4	—	BN90S4	—	—	—	133000	166000	65000
0.87	10732	1.6	1605	7.5	GTN09 L4	—	BN90S4	—	—	—	110000	145000	36000
0.87	10638	1.4	1591	7.5	GTN07 L4	—	BN90S4	M2SB4	52000	65000	109000	145000	45000
0.94	9862	1.0	1475	6.0	GTN06 L4	—	BN90S4	M2SB4	45000	51000	101000	119000	35000
0.97	9616	2.7	1438	11.0	GTN10 L4	—	BN90S4	—	—	—	133000	166000	65000
0.99	9419	1.7	1408	7.5	GTN07 L4	—	BN90S4	M2SB4	51900	65000	109000	144700	45000
1.0	9232	1.8	1380	7.5	GTN09 L4	—	BN90S4	—	—	—	110000	143800	35800
1.1	8599	1.9	1286	7.5	GTN09 L4	—	BN90S4	—	—	—	109200	140800	35000
1.1	8557	1.0	1279	6.0	GTN06 L4	—	BN90S4	M2SB4	45000	51000	99700	116100	34000
1.1	8524	1.4	1274	7.5	GTN07 L4	—	BN90S4	M2SB4	50200	63000	107100	140400	43600
1.2	7736	1.8	1157	7.5	GTN07 L4	—	BN90S4	M2SB4	48600	60900	104100	136400	42200
1.2	7687	2.1	1149	7.5	GTN09 L4	—	BN90S4	—	—	—	105500	136100	33700
1.3	7320	1.1	1095	6.0	GTN06 L4	—	BN90S4	M2SB4	42900	48600	95200	110800	32200
1.4	6788	1.4	1015	6.0	GTN06 L4	—	BN90S4	M2SB4	41900	47400	93000	108300	31400
1.4	6682	2.1	999	7.5	GTN07 L4	—	BN90S4	M2SB4	46300	58000	99600	130500	40200
1.4	6682	2.7	999	7.5	GTN09 L4	—	BN90S4	—	—	—	101200	130500	32200
1.5	6061	2.5	906	7.5	GTN07 L4	—	BN90S4	M2SB4	44800	56200	96700	126800	38900
1.5	6061	3.0	906	7.5	GTN09 L4	—	BN90S4	—	—	—	98300	126800	31100
1.6	5866	1.3	877	6.0	GTN06 L4	—	BN90S4	M2SB4	39900	45200	89000	103700	29900
1.7	5553	1.1	830	12.0	—	GTN06 R4	BN90S4	M2SB4	39100	44300	87600	102000	29400
1.7	5458	1.0	816	6.0	GTN05 L4	—	BN90S4	M2SB4	31300	36100	53300	64100	20000
1.7	5409	1.4	809	6.0	GTN06 L4	—	BN90S4	M2SB4	38800	44000	86900	101200	29200
1.7	5354	2.5	801	7.5	GTN07 L4	—	BN90S4	M2SB4	43000	53900	93200	122100	37400
2.0	4679	2.0	700	6.0	GTN06 L4	—	BN90S4	M2SB4	37000	41900	83200	96900	27800
2.0	4613	2.1	690	15.0	—	GTN07 R4	BN90S4	M2SB4	40900	51300	89100	116800	35500
2.1	4449	1.4	665	12.0	—	GTN06 R4	BN90S4	M2SB4	36400	41200	82000	95400	27300
2.1	4407	0.9	659	12.0	—	GTN05 R4	BN90S4	M2SB4	29100	33600	50000	60100	18700
2.1	4371	3.0	654	7.5	GTN07 L4	—	BN90S4	M2SB4	40200	50400	87700	114900	34900
2.1	4344	1.0	649	6.0	GTN05 L4	—	BN90S4	M2SB4	29000	33400	49700	59800	18600
2.2	4250	2.2	636	6.0	GTN06 L4	—	BN90S4	M2SB4	35800	40600	80800	94100	26900
2.4	3949	2.1	590	12.0	—	GTN06 R4	BN90S4	M2SB4	34900	39600	79100	92100	26200
2.4	3941	2.4	589	6.0	GTN06 L4	—	BN90S4	M2SB4	34900	39600	79000	92000	26200
2.5	3791	1.3	567	12.0	—	GTN05 R4	BN90S4	M2SB4	27700	32000	47700	57400	17800
2.5	3719	1.0	556	6.0	GTN04 L4	—	BN90S4	M2SB4	27500	31700	47500	57100	17600
2.5	3719	1.5	556	6.0	GTN05 L4	—	BN90S4	M2SB4	27500	31700	47500	57100	17600
2.5	3678	2.0	550	12.0	—	GTN06 R4	BN90S4	M2SB4	34100	38700	77400	90100	25600
2.6	3531	1.1	528	12.0	—	GTN05 R4	BN90S4	M2SB4	27000	31200	46700	56200	17300
2.7	3406	2.8	509	6.0	GTN06 L4	—	BN90S4	M2SB4	33300	37700	75600	88100	25000
2.8	3292	1.1	492	6.0	GTN04 L4	—	BN90S4	M2SB4	26400	30500	45800	55100	16900
2.8	3292	1.6	492	6.0	GTN05 L4	—	BN90S4	M2SB4	26400	30500	45800	55100	16900
2.8	3280	2.8	490	15.0	—	GTN07 R4	BN90S4	M2SB4	36500	45800	80500	105400	31700
2.8	3264	2.8	488	12.0	—	GTN06 R4	BN90S4	M2SB4	32800	37100	74700	87000	24600
3.1	3041	2.3	455	12.0	—	GTN06 R4	BN90S4	M2SB4	32000	36300	73100	85100	24100
3.1	3021	1.2	452	12.0	—	GTN04 R4	BN90S4	M2SB4	25700	29600	44600	53700	16500
3.1	3021	1.6	452	12.0	—	GTN05 R4	BN90S4	M2SB4	25700	29600	44600	53700	16500
3.1	2980	0.9	446	6.0	GTN03 L4	—	BN90S4	M2SB4	25500	29500	44400	53400	16400
3.1	2980	1.2	446	6.0	GTN04 L4	—	BN90S4	M2SB4	25500	29500	44400	53400	16400
3.1	2980	1.8	446	6.0	GTN05 L4	—	BN90S4	M2SB4	25500	29500	44400	53400	16400
3.4	2764	1.1	413	6.0	GTN04 L4	—	BN90S4	M2SB4	24900	28800	43400	52200	16000
3.4	2764	1.7	413	6.0	GTN05 L4	—	BN90S4	M2SB4	24900	28800	43400	52200	16000
3.4	2801	2.0	405	7.5	GTN06 L3	—	BN90S4	M2SB4	30800	34900	70600	82200	23100
3.5	2779	1.4	402	7.5	GTN05 L3	—	BN90S4	M2SB4	24700	28500	43100	51800	15800
3.6	2614	2.6	391	6.0	GTN06 L4	—	BN90S4	M2SB4	30400	34500	69900	81400	22900
3.6	2609	1.4	390	12.0	—	GTN05 R4	BN90S4	M2SB4	24400	28200	42700	51400	15700
3.6	2601	2.9	389	12.0	—	GTN06 R4	BN90S4	M2SB4	30400	34400	69800	81200	22800
3.6	2689	1.2	389	7.5	GTN05 L3	—	BN90S4	M2SB4	24400	28200	42600	51300	15700
3.8	2434	0.9	364	12.0	—	GTN03 R4	BN90S4	M2SB4	23900	27600	41800	50300	15300
3.8	2434	1.2	364	12.0	—	GTN04 R4	BN90S4	M2SB4	23900	27600	41800	50300	15300

A

A

P_1 = 1.1 kW

n_2 min^{-1}	M_2 Nm	S	i	Pt kW					Rn_2 [N] LK	LS	HK/MK	HS/MS	LSH
3.8	2434	1.9	364	12.0	—	GTN05 R4	BN90S4	M2SB4	23900	27600	41800	50300	15300
4.1	2360	1.0	341	7.5	GTN04 L3	—	BN90S4	M2SB4	23400	27000	41000	49300	15000
4.1	2257	1.1	338	12.0	—	GTN04 R4	BN90S4	M2SB4	23300	26900	40900	49200	14900
4.1	2244	1.0	336	12.0	—	GTN03 R4	BN90S4	M2SB4	23200	26800	40800	49100	14900
4.1	2244	2.0	336	12.0	—	GTN05 R4	BN90S4	M2SB4	23200	26800	40800	49100	14900
4.3	2244	2.5	325	7.5	GTN06 L3	—	BN90S4	M2SB4	28600	32400	66100	76900	21500
4.3	2223	1.6	321	7.5	GTN05 L3	—	BN90S4	M2SB4	22900	26400	40300	48500	14700
4.4	2091	1.7	313	12.0	—	GTN05 R4	BN90S4	M2SB4	22700	26200	39900	48100	14600
4.5	2050	1.7	307	12.0	—	GTN04 R4	BN90S4	M2SB4	22500	26000	39700	47800	14500
4.8	1945	1.0	291	10.0	—	GTN01 R4	BN90S4	M2SB4	7210	7210	19100	22000	4740
4.8	1939	1.4	290	12.0	—	GTN03 R4	BN90S4	M2SB4	22100	25600	39100	47000	14200
4.8	1939	1.9	290	12.0	—	GTN04 R4	BN90S4	M2SB4	22100	25600	39100	47000	14200
4.8	1939	2.7	290	12.0	—	GTN05 R4	BN90S4	M2SB4	22100	25600	39100	47000	14200
4.8	1992	2.8	288	7.5	GTN06 L3	—	BN90S4	M2SB4	27500	31200	63700	74200	20700
5.0	1912	1.2	276	7.5	GTN03 L3	—	BN90S4	M2SB4	21800	25200	38500	46300	14000
5.0	1912	2.3	276	7.5	GTN05 L3	—	BN90S4	M2SB4	21800	25200	38500	46300	14000
5.1	1888	1.3	273	7.5	GTN04 L3	—	BN90S4	M2SB4	21700	25000	38300	46100	13900
5.2	1855	3.0	268	7.5	GTN06 L3	—	BN90S4	M2SB4	26900	30400	62400	72700	20200
5.2	1794	1.0	268	10.0	—	GTN01 R4	BN90S4	M2SB4	7020	7020	18700	21500	4610
5.2	1789	2.0	267	12.0	—	GTN04 R4	BN90S4	M2SB4	21500	24900	38100	45900	13800
5.4	1781	1.0	258	7.5	GTN03 L3	—	BN90S4	M2SB4	21300	24600	37700	45300	13600
5.4	1781	2.0	258	7.5	GTN05 L3	—	BN90S4	M2SB4	21300	24600	37700	45300	13600
5.4	1707	1.1	255	12.0	—	GTN03 R4	BN90S4	M2SB4	21200	24500	37600	45200	13600
5.4	1707	2.1	255	12.0	—	GTN05 R4	BN90S4	M2SB4	21200	24500	37600	45200	13600
6.0	1545	1.2	231	12.0	—	GTN03 R4	BN90S4	M2SB4	20500	23700	36500	43900	13200
6.0	1545	2.3	231	12.0	—	GTN05 R4	BN90S4	M2SB4	20500	23700	36500	43900	13200
6.1	1515	2.3	227	12.0	—	GTN04 R4	BN90S4	M2SB4	20400	23500	36300	43600	13100
6.3	1528	1.2	221	7.5	GTN01 L3	—	BN90S4	M2SB4	6580	6580	17600	20300	4320
6.3	1524	1.5	220	7.5	GTN03 L3	—	BN90S4	M2SB4	20200	23300	36000	43300	13000
6.3	1524	2.4	220	7.5	GTN04 L3	—	BN90S4	M2SB4	20200	23300	36000	43300	13000
6.5	1438	1.3	215	10.0	—	GTN01 R4	BN90S4	M2SB4	6520	6520	17500	20100	4280
6.5	1433	1.9	214	12.0	—	GTN03 R4	BN90S4	M2SB4	20000	23100	35700	42900	12800
6.5	1433	2.5	214	12.0	—	GTN04 R4	BN90S4	M2SB4	20000	23100	35700	42900	12800
6.9	1395	1.7	202	7.5	GTN04 L3	—	BN90S4	M2SB4	19600	22600	35000	42100	12600
7.2	1328	1.0	192	7.5	GTN01 L3	—	BN90S4	M2SB4	6280	6280	16900	19400	4130
7.3	1316	1.4	190	7.5	GTN03 L3	—	BN90S4	M2SB4	19200	22200	34400	41400	12300
7.3	1316	2.7	190	7.5	GTN05 L3	—	BN90S4	M2SB4	19200	22200	34400	41400	12300
7.5	1237	1.9	185	12.0	—	GTN03 R4	BN90S4	M2SB4	19100	22000	34100	41100	12200
7.5	1237	2.8	185	12.0	—	GTN04 R4	BN90S4	M2SB4	19100	22000	34100	41100	12200
7.8	1228	1.8	178	7.5	GTN03 L3	—	BN90S4	M2SB4	18800	21700	33700	40600	12100
7.8	1228	2.3	178	7.5	GTN04 L3	—	BN90S4	M2SB4	18800	21700	33700	40600	12100
7.8	1225	1.4	177	7.5	GTN01 L3	—	BN90S4	M2SB4	6110	6110	16500	19000	4020
7.9	1173	1.5	175	10.0	—	GTN01 R4	BN90S4	M2SB4	6090	6090	16500	18900	4000
8.4	1139	2.1	165	7.5	GTN04 L3	—	BN90S4	M2SB4	18300	21200	33000	39600	11800
8.5	1132	1.9	164	7.5	GTN03 L3	—	BN90S4	M2SB4	18300	21100	32900	39600	11700
8.8	1062	1.6	159	10.0	—	GTN01 R4	BN90S4	M2SB4	5890	5890	16000	18300	3870
8.8	1059	2.5	158	12.0	—	GTN03 R4	BN90S4	M2SB4	18100	20900	32600	39200	11600
9.1	1055	1.7	152	7.5	GTN03 L3	—	BN90S4	M2SB4	17900	20600	32200	38700	11500
9.4	991	2.3	148	12.0	—	GTN03 R4	BN90S4	M2SB4	17700	20400	31900	38400	11400
9.7	958	1.4	143	10.0	—	GTN01 R4	BN90S4	M2SB4	5690	5690	15500	17800	3740
9.8	981	1.8	142	7.5	GTN01 L3	—	BN90S4	M2SB4	5670	5670	15400	17700	3730
9.8	978	2.7	141	7.5	GTN03 L3	—	BN90S4	M2SB4	17400	20100	31500	37900	11200
10.5	919	1.3	133	12.0	—	GTN01 R3	BN90S4	M2SB4	5550	5550	15100	17400	3650
10.6	905	1.0	131	7.5	GTN00 L3	—	BN90S4	M2SB4	5520	5520	15100	17300	3630
10.6	905	1.9	131	7.5	GTN01 L3	—	BN90S4	M2SB4	5520	5520	15100	17300	3630
10.7	867	1.0	130	10.0	—	GTN00 R4	BN90S4	M2SB4	5510	5510	15000	17300	3620
10.7	867	2.0	130	10.0	—	GTN01 R4	BN90S4	M2SB4	5510	5510	15000	17300	3620
11.2	861	2.1	124	7.5	GTN03 L3	—	BN90S4	M2SB4	16700	19300	30300	36500	10700
11.5	839	2.9	121	14.0	—	GTN04 R3	BN90S4	M2SB4	16600	19100	30100	36200	10600
12.0	801	1.6	116	7.5	GTN01 L3	—	BN90S4	M2SB4	5300	5300	14500	16700	3490
12.2	791	2.3	114	14.0	—	GTN03 R3	BN90S4	M2SB4	16200	18700	29500	35500	10400
12.3	779	2.3	113	7.5	GTN03 L3	—	BN90S4	M2SB4	16200	18600	29400	35400	10400
13.1	736	1.8	106	12.0	—	GTN01 R3	BN90S4	M2SB4	5160	5160	14200	16300	3390
13.1	708	1.2	106	10.0	—	GTN00 R4	BN90S4	M2SB4	5150	5150	14100	16200	3380
13.1	708	2.4	106	10.0	—	GTN01 R4	BN90S4	M2SB4	5150	5150	14100	16200	3380
13.3	725	1.2	105	7.5	GTN00 L3	—	BN90S4	M2SB4	5130	5130	14100	16200	3370
13.3	725	2.3	105	7.5	GTN01 L3	—	BN90S4	M2SB4	5130	5130	14100	16200	3370

P_1 = 1.1 kW

n_2 min^{-1}	M_2 Nm	S	i	Pt kW					Rn_2 [N] LK	LS	HK/MK	HS/MS	LSH
15.2	633	2.9	91.5	14.0	—	GTN03 R3	BN90S4	M2SB4	15100	17400	27600	33200	9670
16.2	592	1.4	85.6	7.5	GTN00 L3	—	BN90S4	M2SB4	4790	4790	13300	15200	3150
16.2	592	2.8	85.6	7.5	GTN01 L3	—	BN90S4	M2SB4	4790	4790	13300	15200	3150
16.3	589	1.1	85.2	12.0	—	GTN00 R3	BN90S4	M2SB4	4790	4790	13200	15200	3150
16.3	589	2.2	85.2	12.0	—	GTN01 R3	BN90S4	M2SB4	4790	4790	13200	15200	3150
17.7	544	1.6	78.7	12.0	—	GTN00 R3	BN90S4	M2SB4	4660	4660	12900	14900	3060
17.7	544	2.9	78.7	12.0	—	GTN01 R3	BN90S4	M2SB4	4660	4660	12900	14900	3060
17.9	536	1.6	77.5	7.5	GTN00 L3	—	BN90S4	M2SB4	4640	4640	12900	14800	3050
19.9	483	1.3	69.9	7.5	GTN00 L3	—	BN90S4	M2SB4	4480	4480	12500	14300	2950
19.9	483	2.7	69.9	7.5	GTN01 L3	—	BN90S4	M2SB4	4480	4480	12500	14300	2950
20.4	472	1.4	68.2	12.0	—	GTN00 R3	BN90S4	M2SB4	4440	4440	12400	14200	2920
20.4	472	2.8	68.2	12.0	—	GTN01 R3	BN90S4	M2SB4	4440	4440	12400	14200	2920
21.5	463	1.2	64.8	7.5	GTN00 L2	—	BN90S4	M2SB4	4370	4370	12200	14000	2870
21.5	463	2.5	64.8	7.5	GTN01 L2	—	BN90S4	M2SB4	4370	4370	12200	14000	2870
22.0	437	1.9	63.2	7.5	GTN00 L3	—	BN90S4	M2SB4	4330	4330	12100	13900	2850
22.1	435	2.0	62.9	12.0	—	GTN00 R3	BN90S4	M2SB4	4330	4330	12100	13900	2840
26.8	371	1.8	51.9	7.5	GTN00 L2	—	BN90S4	M2SB4	4060	4060	11400	13100	2670
26.9	357	2.4	51.6	7.5	GTN00 L3	—	BN90S4	M2SB4	4050	4050	11400	13100	2660
27.6	349	2.4	50.4	12.0	—	GTN00 R3	BN90S4	M2SB4	4020	4020	11300	13000	2640
33	297	2.2	41.5	7.5	GTN00 L2	—	BN90S4	M2SB4	3770	3770	10700	12300	2480
34	285	2.3	41.2	12.0	—	GTN00 R3	BN90S4	M2SB4	3760	3760	10600	12200	2470
42	238	2.7	33.3	7.5	GTN00 L2	—	BN90S4	M2SB4	3500	3500	9990	11500	2300
75	132	2.8	18.5	12.0	—	GTN00 R2	BN90S4	M2SB4	2870	2870	8370	9620	1890

P_1 = 1.5 kW

n_2 min^{-1}	M_2 Nm	S	i	Pt kW					Rn_2 [N] LK	LS	HK/MK	HS/MS	LSH
0.56	22651	1.1	2523	11.0	GTN10 L4	—	BN90LA4	—	—	—	133000	166000	65000
0.64	19631	2.5	2187	11.0	GTN13 L4	—	BN90LA4	—	—	—	192000	231000	80000
0.67	18817	1.8	2096	11.0	GTN11 L4	—	BN90LA4	—	—	—	157000	195000	65000
0.70	18150	1.4	2022	11.0	GTN10 L4	—	BN90LA4	—	—	—	133000	166000	65000
0.70	17976	0.9	2003	7.5	GTN09 L4	—	BN90LA4	—	—	—	110000	145000	36000
0.79	16107	1.6	1794	11.0	GTN10 L4	—	BN90LA4	—	—	—	133000	166000	65000
0.80	15863	1.0	1767	7.5	GTN07 L4	—	BN90LA4	M3SA4	52000	65000	109000	145000	45000
0.80	15855	2.7	1766	11.0	GTN11 L4	—	BN90LA4	—	—	—	157000	195000	65000
0.82	15463	1.1	1723	7.5	GTN09 L4	—	BN90LA4	—	—	—	110000	145000	36000
0.84	15078	2.3	1680	11.0	GTN11 L4	—	BN90LA4	—	—	—	157000	195000	65000
0.84	15004	1.7	1672	11.0	GTN10 L4	—	BN90LA4	—	—	—	133000	166000	65000
0.88	14403	1.2	1605	7.5	GTN09 L4	—	BN90LA4	—	—	—	110000	145000	36000
0.89	14277	1.1	1591	7.5	GTN07 L4	—	BN90LA4	M3SA4	52000	65000	109000	145000	45000
0.98	12906	2.0	1438	11.0	GTN10 L4	—	BN90LA4	—	—	—	133000	166000	65000
1.0	12641	1.2	1408	7.5	GTN07 L4	—	BN90LA4	M3SA4	51900	65000	109000	144700	45000
1.0	12390	1.3	1380	7.5	GTN09 L4	—	BN90LA4	—	—	—	110000	143800	35800
1.1	11541	1.4	1286	7.5	GTN09 L4	—	BN90LA4	—	—	—	109200	140800	35000
1.1	11440	1.1	1274	7.5	GTN07 L4	—	BN90LA4	M3SA4	50200	63000	107100	140400	43600
1.1	11300	2.4	1259	11.0	GTN10 L4	—	BN90LA4	—	—	—	128500	161600	62700
1.2	10451	2.8	1164	11.0	GTN10 L4	—	BN90LA4	—	—	—	125500	157900	61100
1.2	10382	1.4	1157	7.5	GTN07 L4	—	BN90LA4	M3SA4	48600	60900	104100	136400	42200
1.2	10317	1.6	1149	7.5	GTN09 L4	—	BN90LA4	—	—	—	105500	136100	33700
1.4	9110	1.0	1015	6.0	GTN06 L4	—	BN90LA4	M3SA4	41900	47400	93000	108300	31400
1.4	8968	1.5	999	7.5	GTN07 L4	—	BN90LA4	M3SA4	46300	58000	99600	130500	40200
1.4	8968	2.0	999	7.5	GTN09 L4	—	BN90LA4	—	—	—	101200	130500	32200
1.6	8135	1.9	906	7.5	GTN07 L4	—	BN90LA4	M3SA4	44800	56200	96700	126800	38900
1.6	8135	2.2	906	7.5	GTN09 L4	—	BN90LA4	—	—	—	98300	126800	31100
1.6	8061	2.9	898	15.0	—	GTN10 R4	BN90LA4	—	—	—	116100	146000	56100
1.6	7872	1.0	877	6.0	GTN06 L4	—	BN90LA4	M3SA4	39900	45200	89000	103700	29900
1.7	7260	1.1	809	6.0	GTN06 L4	—	BN90LA4	M3SA4	38800	44000	86900	101200	29200
1.8	7186	1.9	801	7.5	GTN07 L4	—	BN90LA4	M3SA4	43000	53900	93200	122100	37400
1.8	7186	2.5	801	7.5	GTN09 L4	—	BN90LA4	—	—	—	94700	122100	29900
2.0	6482	2.3	722	7.5	GTN07 L4	—	BN90LA4	M3SA4	41500	52100	90400	118400	36100
2.0	6280	1.5	700	6.0	GTN06 L4	—	BN90LA4	M3SA4	37000	41900	83200	96900	27800
2.0	6191	1.6	690	15.0	—	GTN07 R4	BN90LA4	M3SA4	40900	51300	89100	116800	35500
2.0	6191	2.4	690	15.0	—	GTN09 R4	BN90LA4	—	—	—	90600	116800	28400

A

P_1 = 1.5 kW

n_2 min^{-1}	M_2 Nm	S	i	Pt kW					Rn_2 [N] LK	LS	HK/MK	HS/MS	LSH
2.1	5971	1.0	665	12.0	—	GTN06 R4	BN90LA4	M3SA4	36400	41200	82000	95400	27300
2.2	5866	2.2	654	7.5	GTN07 L4	—	BN90LA4	M3SA4	40200	50400	87700	114900	34900
2.2	5705	1.7	636	6.0	GTN06 L4	—	BN90LA4	M3SA4	35800	40600	80800	94100	26900
2.4	5299	1.6	590	12.0	—	GTN06 R4	BN90LA4	M3SA4	34900	39600	79100	92100	26200
2.4	5290	1.8	589	6.0	GTN06 L4	—	BN90LA4	M3SA4	34900	39600	79000	92000	26200
2.4	5217	2.4	581	15.0	—	GTN07 R4	BN90LA4	M3SA4	38600	48500	84700	110900	33600
2.4	5194	2.9	579	7.5	GTN07 L4	—	BN90LA4	M3SA4	38600	48400	84500	110800	33500
2.5	5087	1.0	567	12.0	—	GTN05 R4	BN90LA4	M3SA4	27700	32000	47700	57400	17800
2.5	4992	1.1	556	6.0	GTN05 L4	—	BN90LA4	M3SA4	27500	31700	47500	57100	17600
2.6	4936	1.5	550	12.0	—	GTN06 R4	BN90LA4	M3SA4	34100	38700	77400	90100	25600
2.8	4571	2.1	509	6.0	GTN06 L4	—	BN90LA4	M3SA4	33300	37700	75600	88100	25000
2.9	4419	1.2	492	6.0	GTN05 L4	—	BN90LA4	M3SA4	26400	30500	45800	55100	16900
2.9	4403	2.1	490	15.0	—	GTN07 R4	BN90LA4	M3SA4	36500	45800	80500	105400	31700
2.9	4381	2.1	488	12.0	—	GTN06 R4	BN90LA4	M3SA4	32800	37100	74700	87000	24600
3.0	4172	2.9	465	7.5	GTN07 L4	—	BN90LA4	M3SA4	35800	45000	79200	103700	31200
3.1	4081	1.7	455	12.0	—	GTN06 R4	BN90LA4	M3SA4	32000	36300	73100	85100	24100
3.1	4054	0.9	452	12.0	—	GTN04 R4	BN90LA4	M3SA4	25700	29600	44600	53700	16500
3.1	4054	1.2	452	12.0	—	GTN05 R4	BN90LA4	M3SA4	25700	29600	44600	53700	16500
3.2	4000	0.9	446	6.0	GTN04 L4	—	BN90LA4	M3SA4	25500	29500	44400	53400	16400
3.2	4000	1.4	446	6.0	GTN05 L4	—	BN90LA4	M3SA4	25500	29500	44400	53400	16400
3.2	3988	2.5	444	6.0	GTN06 L4	—	BN90LA4	M3SA4	31800	36000	72600	84500	23900
3.4	3768	2.3	420	12.0	—	GTN06 R4	BN90LA4	M3SA4	31200	35300	71400	83100	23400
3.4	3709	1.3	413	6.0	GTN05 L4	—	BN90LA4	M3SA4	24900	28800	43400	52200	16000
3.5	3759	1.5	405	7.5	GTN06 L3	—	BN90LA4	M3SA4	30800	34900	70600	82200	23100
3.5	3729	1.0	402	7.5	GTN05 L3	—	BN90LA4	M3SA4	24700	28500	43100	51800	15800
3.6	3509	1.9	391	6.0	GTN06 L4	—	BN90LA4	M3SA4	30400	34500	69900	81400	22900
3.6	3502	1.1	390	12.0	—	GTN05 R4	BN90LA4	M3SA4	24400	28200	42700	51400	15700
3.6	3491	2.2	389	12.0	—	GTN06 R4	BN90LA4	M3SA4	30400	34400	69800	81200	22800
3.9	3266	0.9	364	12.0	—	GTN04 R4	BN90LA4	M3SA4	23300	26900	40900	49300	15000
3.9	3266	1.4	364	12.0	—	GTN05 R4	BN90LA4	M3SA4	23900	27600	41800	50300	15300
4.2	3123	2.8	336	11.0	GTN07 L3	—	BN90LA4	M3SA4	32200	40400	71900	94200	28000
4.2	3012	1.5	336	12.0	—	GTN05 R4	BN90LA4	M3SA4	23200	26800	40800	49100	14900
4.3	3012	1.8	325	7.5	GTN06 L3	—	BN90LA4	M3SA4	28600	32400	66100	76900	21500
4.4	2983	1.2	321	7.5	GTN05 L3	—	BN90LA4	M3SA4	22900	26400	40300	48500	14700
4.5	2806	1.3	313	12.0	—	GTN05 R4	BN90LA4	M3SA4	22700	26200	39900	48100	14600
4.5	2797	2.7	312	12.0	—	GTN06 R4	BN90LA4	M3SA4	28200	32000	65300	76000	21200
4.6	2752	1.3	307	12.0	—	GTN04 R4	BN90LA4	M3SA4	22500	26000	39700	47800	14500
4.9	2603	1.0	290	12.0	—	GTN03 R4	BN90LA4	M3SA4	22100	25600	39100	47000	14200
4.9	2603	1.4	290	12.0	—	GTN04 R4	BN90LA4	M3SA4	22100	25600	39100	47000	14200
4.9	2603	2.0	290	12.0	—	GTN05 R4	BN90LA4	M3SA4	22100	25600	39100	47000	14200
4.9	2673	2.1	288	7.5	GTN06 L3	—	BN90LA4	M3SA4	27500	31200	63700	74200	20700
5.1	2566	1.7	276	7.5	GTN05 L3	—	BN90LA4	M3SA4	21800	25200	38500	46300	14000
5.2	2534	0.9	273	7.5	GTN04 L3	—	BN90LA4	M3SA4	21700	25000	38300	46100	13900
5.3	2490	2.2	268	7.5	GTN06 L3	—	BN90LA4	M3SA4	26900	30400	62400	72700	20200
5.3	2400	1.5	267	12.0	—	GTN04 R4	BN90LA4	M3SA4	21500	24900	38100	45900	13800
5.5	2390	1.5	258	7.5	GTN05 L3	—	BN90LA4	M3SA4	21300	24600	37700	45300	13600
5.5	2290	1.6	255	12.0	—	GTN05 R4	BN90LA4	M3SA4	21200	24500	37600	45200	13600
6.1	2073	1.7	231	12.0	—	GTN05 R4	BN90LA4	M3SA4	20500	23700	36500	43900	13200
6.2	2033	1.7	227	12.0	—	GTN04 R4	BN90LA4	M3SA4	20400	23500	36300	43600	13100
6.4	2045	1.1	220	7.5	GTN03 L3	—	BN90LA4	M3SA4	20200	23300	36000	43300	13000
6.4	2045	1.8	220	7.5	GTN04 L3	—	BN90LA4	M3SA4	20200	23300	36000	43300	13000
6.4	2045	2.3	220	7.5	GTN05 L3	—	BN90LA4	M3SA4	20200	23300	36000	43300	13000
6.6	1929	0.9	215	10.0	—	GTN01 R4	BN90LA4	M3SA4	6520	6520	17500	20100	4280
6.6	1923	1.4	214	12.0	—	GTN03 R4	BN90LA4	M3SA4	20000	23100	35700	42900	12800
6.6	1923	1.9	214	12.0	—	GTN04 R4	BN90LA4	M3SA4	20000	23100	35700	42900	12800
6.6	1923	2.8	214	12.0	—	GTN05 R4	BN90LA4	M3SA4	19600	22600	34900	42000	12500
7.0	1872	1.3	202	7.5	GTN04 L3	—	BN90LA4	M3SA4	19600	22600	35000	42100	12600
7.4	1766	1.0	190	7.5	GTN03 L3	—	BN90LA4	M3SA4	19200	22200	34400	41400	12300
7.4	1766	2.0	190	7.5	GTN05 L3	—	BN90LA4	M3SA4	19200	22200	34400	41400	12300
7.6	1660	1.4	185	12.0	—	GTN03 R4	BN90LA4	M3SA4	19100	22000	34100	41100	12200
7.6	1660	2.1	185	12.0	—	GTN04 R4	BN90LA4	M3SA4	19100	22000	34100	41100	12200
7.6	1660	2.7	185	12.0	—	GTN05 R4	BN90LA4	M3SA4	19100	22000	34100	41100	12200
7.9	1648	1.3	178	7.5	GTN03 L3	—	BN90LA4	M3SA4	18800	21700	33700	40600	12100
7.9	1648	1.7	178	7.5	GTN04 L3	—	BN90LA4	M3SA4	18800	21700	33700	40600	12100
7.9	1648	2.7	178	7.5	GTN05 L3	—	BN90LA4	M3SA4	18800	21700	33700	40600	12100
8.0	1644	1.1	177	7.5	GTN01 L3	—	BN90LA4	M3SA4	6110	6110	16500	19000	4020
8.0	1575	1.1	175	10.0	—	GTN01 R4	BN90LA4	M3SA4	6090	6090	16500	18900	4000

P_1 = 1.5 kW

n_2 min^{-1}	M_2 Nm	S	i	Pt kW					Rn_2 [N] LK	LS	HK/MK	HS/MS	LSH
8.6	1528	1.6	165	7.5	GTN04 L3	—	BN90LA4	M3SA4	18300	21200	33000	39600	11800
8.6	1520	1.4	164	7.5	GTN03 L3	—	BN90LA4	M3SA4	18300	21100	32900	39600	11700
8.6	1520	2.9	164	7.5	GTN05 L3	—	BN90LA4	M3SA4	18300	21100	32900	39600	11700
8.9	1426	1.2	159	10.0	—	GTN01 R4	BN90LA4	M3SA4	5890	5890	16000	18300	3870
8.9	1421	1.9	158	12.0	—	GTN03 R4	BN90LA4	M3SA4	18100	20900	32600	39200	11600
8.9	1421	2.5	158	12.0	—	GTN04 R4	BN90LA4	M3SA4	18100	20900	32600	39200	11600
9.2	1415	1.3	152	7.5	GTN03 L3	—	BN90LA4	M3SA4	17900	20600	32200	38700	11500
9.2	1415	2.5	152	7.5	GTN03 L3	—	BN90LA4	M3SA4	17900	20600	32200	38700	11500
9.4	1388	2.5	150	7.5	GTN04 L3	—	BN90LA4	M3SA4	17800	20500	32000	38500	11400
9.5	1330	2.6	148	12.0	—	GTN04 R4	BN90LA4	M3SA4	17700	20400	31900	38400	11400
9.5	1330	1.7	148	12.0	—	GTN03 R4	BN90LA4	M3SA4	17700	20400	31900	38400	11400
9.8	1286	1.0	143	10.0	—	GTN01 R4	BN90LA4	M3SA4	5690	5690	15500	17800	3740
9.9	1317	1.3	142	7.5	GTN01 L3	—	BN90LA4	M3SA4	5670	5670	15400	17700	3730
10.0	1313	2.0	141	7.5	GTN03 L3	—	BN90LA4	M3SA4	17400	20100	31500	37900	11200
10.0	1313	2.7	141	7.5	GTN04 L3	—	BN90LA4	M3SA4	17400	20100	31500	37900	11200
10.6	1233	0.9	133	12.0	—	GTN01 R3	BN90LA4	M3SA4	5550	5550	15100	17400	3650
10.8	1215	1.4	131	7.5	GTN01 L3	—	BN90LA4	M3SA4	5520	5520	15100	17300	3630
10.8	1211	2.9	130	7.5	GTN04 L3	—	BN90LA4	M3SA4	17000	19600	30700	37000	10900
10.9	1164	1.5	130	10.0	—	GTN01 R4	BN90LA4	M3SA4	5510	5510	15000	17300	3620
10.9	1160	2.3	129	12.0	—	GTN03 R4	BN90LA4	M3SA4	16900	19500	30600	36900	10800
11.3	1155	1.6	124	7.5	GTN03 L3	—	BN90LA4	M3SA4	16700	19300	30300	36500	10700
11.6	1125	2.1	121	14.0	—	GTN04 R3	BN90LA4	M3SA4	16600	19100	30100	36200	10600
12.2	1075	1.2	116	7.5	GTN01 L3	—	BN90LA4	M3SA4	5300	5300	14500	16700	3490
12.3	1062	1.7	114	14.0	—	GTN03 R3	BN90LA4	M3SA4	16200	18700	29500	35500	10400
12.5	1046	1.7	113	7.5	GTN03 L3	—	BN90LA4	M3SA4	16200	18600	29400	35400	10400
13.2	988	1.3	106	12.0	—	GTN01 R3	BN90LA4	M3SA4	5160	5160	14200	16300	3390
13.3	950	0.9	106	10.0	—	GTN00 R4	BN90LA4	M3SA4	5030	5030	13800	15900	3310
13.3	950	1.8	106	10.0	—	GTN01 R4	BN90LA4	M3SA4	5150	5150	14100	16200	3380
13.4	973	1.7	105	7.5	GTN01 L3	—	BN90LA4	M3SA4	5130	5130	14100	16200	3370
13.5	970	2.7	105	7.5	GTN03 L3	—	BN90LA4	M3SA4	15800	18200	28800	34600	10100
14.5	900	2.7	97.0	14.0	—	GTN04 R3	BN90LA4	M3SA4	15400	17700	28100	33800	9860
15.4	849	2.1	91.5	14.0	—	GTN03 R3	BN90LA4	M3SA4	15100	17400	27600	33200	9670
15.6	837	2.7	90.2	7.5	GTN03 L3	—	BN90LA4	M3SA4	15000	17300	27500	33100	9620
16.5	794	1.1	85.6	7.5	GTN00 L3	—	BN90LA4	M3SA4	4790	4790	13300	15200	3150
16.5	794	2.1	85.6	7.5	GTN01 L3	—	BN90LA4	M3SA4	4790	4790	13300	15200	3150
16.6	790	1.6	85.2	12.0	—	GTN01 R3	BN90LA4	M3SA4	4790	4790	13200	15200	3150
17.9	731	3.0	78.7	14.0	—	GTN03 R3	BN90LA4	M3SA4	14300	16500	26400	31800	9190
17.9	730	1.2	78.7	12.0	—	GTN00 R3	BN90LA4	M3SA4	4660	4660	12900	14900	3060
17.9	730	2.2	78.7	12.0	—	GTN01 R3	BN90LA4	M3SA4	4660	4660	12900	14900	3060
18.2	719	1.2	77.5	7.5	GTN00 L3	—	BN90LA4	M3SA4	4640	4640	12900	14800	3050
18.2	719	2.3	77.5	7.5	GTN01 L3	—	BN90LA4	M3SA4	4640	4640	12900	14800	3050
19.2	681	2.7	73.3	14.0	—	GTN03 R3	BN90LA4	M3SA4	14000	16200	25900	31100	8980
20.2	649	1.0	69.9	7.5	GTN00 L3	—	BN90LA4	M3SA4	4480	4480	12500	14300	2950
20.2	649	2.0	69.9	7.5	GTN01 L3	—	BN90LA4	M3SA4	4480	4480	12500	14300	2950
20.7	633	1.0	68.2	12.0	—	GTN00 R3	BN90LA4	M3SA4	4440	4440	12400	14200	2920
20.7	633	2.1	68.2	12.0	—	GTN01 R3	BN90LA4	M3SA4	4440	4440	12400	14200	2920
21.8	621	1.9	64.8	7.5	GTN01 L2	—	BN90LA4	M3SA4	4370	4370	12200	14000	2870
22.3	587	1.4	63.2	7.5	GTN00 L3	—	BN90LA4	M3SA4	4330	4330	12100	13900	2850
22.3	587	2.8	63.2	7.5	GTN01 L3	—	BN90LA4	M3SA4	4330	4330	12100	13900	2850
22.4	584	1.5	62.9	12.0	—	GTN00 R3	BN90LA4	M3SA4	4330	4330	12100	13900	2840
22.4	584	2.8	62.9	12.0	—	GTN01 R3	BN90LA4	M3SA4	4330	4330	12100	13900	2840
27.2	498	1.3	51.9	7.5	GTN00 L2	—	BN90LA4	M3SA4	4060	4060	11400	13100	2670
27.2	498	2.6	51.9	7.5	GTN01 L2	—	BN90LA4	M3SA4	4060	4060	11400	13100	2670
27.3	479	1.8	51.6	7.5	GTN00 L3	—	BN90LA4	M3SA4	4050	4050	11400	13100	2660
28.0	468	1.8	50.4	12.0	—	GTN00 R3	BN90LA4	M3SA4	4020	4020	11300	13000	2640
34	398	1.6	41.5	7.5	GTN00 L2	—	BN90LA4	M3SA4	3770	3770	10700	12300	2480
34	382	1.7	41.2	12.0	—	GTN00 R3	BN90LA4	M3SA4	3760	3760	10600	12200	2470
37	368	2.3	38.4	7.5	GTN00 L2	—	BN90LA4	M3SA4	3670	3670	10400	12000	2410
38	346	2.4	37.3	12.0	—	GTN00 R3	BN90LA4	M3SA4	3630	3630	10300	11900	2390
42	319	2.0	33.3	7.5	GTN00 L2	—	BN90LA4	M3SA4	3500	3500	9990	11500	2300
46	294	2.9	30.7	7.5	GTN00 L2	—	BN90LA4	M3SA4	3410	3410	9750	11200	2240
46	282	3.0	30.4	12.0	—	GTN00 R3	BN90LA4	M3SA4	3400	3400	9730	11200	2230
76	177	2.1	18.5	12.0	—	GTN00 R2	BN90LA4	M3SA4	2870	2870	8370	9620	1890

A

A

P_1 = 1.85 kW

n_2 min^{-1}	M_2 Nm	S	i	Pt kW					Rn_2 [N] LK	LS	HK/MK	HS/MS	LSH
0.55	28202	0.9	2523	11.0	**GTN10 L4**	—	**BN90LB4**	—	—	—	133000	166000	65000
0.64	24442	2.0	2187	11.0	**GTN13 L4**	—	**BN90LB4**	—	—	—	192000	231000	80000
0.66	23430	1.5	2096	11.0	**GTN11 L4**	—	**BN90LB4**	—	—	—	157000	195000	65000
0.69	22598	1.2	2022	11.0	**GTN10 L4**	—	**BN90LB4**	—	—	—	133000	166000	65000
0.77	20306	2.9	1817	11.0	**GTN13 L4**	—	**BN90LB4**	—	—	—	192000	231000	80000
0.77	20055	1.3	1794	11.0	**GTN10 L4**	—	**BN90LB4**	—	—	—	133000	166000	65000
0.79	19742	2.2	1766	11.0	**GTN11 L4**	—	**BN90LB4**	—	—	—	157000	195000	65000
0.83	18774	1.8	1680	11.0	**GTN11 L4**	—	**BN90LB4**	—	—	—	157000	195000	65000
0.83	18681	1.4	1672	11.0	**GTN10 L4**	—	**BN90LB4**	—	—	—	133000	166000	65000
0.87	17934	0.9	1605	7.5	**GTN09 L4**	—	**BN90LB4**	—	—	—	110000	145000	36000
0.97	16070	1.6	1438	11.0	**GTN10 L4**	—	**BN90LB4**	—	—	—	133000	166000	65000
0.98	15819	2.7	1415	11.0	**GTN11 L4**	—	**BN90LB4**	—	—	—	157000	195000	65000
0.99	15739	1.0	1408	7.5	**GTN07 L4**	—	**BN90LB4**	—	51900	65000	109000	144700	45000
1.0	15427	1.1	1380	7.5	**GTN09 L4**	—	**BN90LB4**	—	—	—	110000	143800	35800
1.1	14370	1.1	1286	7.5	**GTN09 L4**	—	**BN90LB4**	—	—	—	109200	140800	35000
1.1	14070	2.0	1259	11.0	**GTN10 L4**	—	**BN90LB4**	—	—	—	128500	161600	62700
1.2	13012	2.3	1164	11.0	**GTN10 L4**	—	**BN90LB4**	—	—	—	125500	157900	61100
1.2	12927	1.1	1157	7.5	**GTN07 L4**	—	**BN90LB4**	—	48600	60900	104100	136400	42200
1.2	12845	1.3	1149	7.5	**GTN09 L4**	—	**BN90LB4**	—	—	—	105500	136100	33700
1.4	11406	2.5	1021	11.0	**GTN10 L4**	—	**BN90LB4**	—	—	—	120700	151800	58500
1.4	11166	1.2	999	7.5	**GTN07 L4**	—	**BN90LB4**	—	46300	58000	99600	130500	40200
1.4	11166	1.6	999	7.5	**GTN09 L4**	—	**BN90LB4**	—	—	—	101200	130500	32200
1.5	10129	1.5	906	7.5	**GTN07 L4**	—	**BN90LB4**	—	44800	56200	96700	126800	38900
1.5	10129	1.8	906	7.5	**GTN09 L4**	—	**BN90LB4**	—	—	—	98300	126800	31100
1.5	10037	2.3	898	15.0	—	**GTN10 R4**	**BN90LB4**	—	—	—	116100	146000	56100
1.7	8947	1.5	801	7.5	**GTN07 L4**	—	**BN90LB4**	—	43000	53900	93200	122100	37400
1.7	8947	2.0	801	7.5	**GTN09 L4**	—	**BN90LB4**	—	—	—	94700	122100	29900
1.9	8071	1.9	722	7.5	**GTN07 L4**	—	**BN90LB4**	—	41500	52100	90400	118400	36100
1.9	8071	2.6	722	7.5	**GTN09 L4**	—	**BN90LB4**	—	—	—	91800	118400	28900
2.0	7819	1.2	700	6.0	**GTN06 L4**	—	**BN90LB4**	—	37000	41900	83200	96900	27800
2.0	7709	1.3	690	15.0	—	**GTN07 R4**	**BN90LB4**	—	40900	51300	89100	116800	35500
2.0	7709	1.9	690	15.0	—	**GTN09 R4**	**BN90LB4**	—	—	—	90600	116800	28400
2.1	7304	1.8	654	7.5	**GTN07 L4**	—	**BN90LB4**	—	40200	50400	87700	114900	34900
2.1	7304	2.5	654	7.5	**GTN09 L4**	—	**BN90LB4**	—	—	—	89100	114900	27900
2.2	7103	1.3	636	6.0	**GTN06 L4**	—	**BN90LB4**	—	35800	40600	80800	94100	26900
2.4	6598	1.3	590	12.0	—	**GTN06 R4**	**BN90LB4**	—	34900	39600	79100	92100	26200
2.4	6586	1.4	589	6.0	**GTN06 L4**	—	**BN90LB4**	—	34900	39600	79000	92000	26200
2.4	6495	1.9	581	15.0	—	**GTN07 R4**	**BN90LB4**	—	38600	48500	84700	110900	33600
2.4	6495	2.4	581	15.0	—	**GTN09 R4**	**BN90LB4**	—	—	—	86000	110900	26900
2.4	6467	2.3	579	7.5	**GTN07 L4**	—	**BN90LB4**	—	38600	48400	84500	110800	33500
2.5	6146	1.2	550	12.0	—	**GTN06 R4**	**BN90LB4**	—	34100	38700	77400	90100	25600
2.7	5691	1.7	509	6.0	**GTN06 L4**	—	**BN90LB4**	—	33300	37700	75600	88100	25000
2.7	5691	2.5	509	7.5	**GTN07 L4**	—	**BN90LB4**	—	37000	46400	81400	106600	32100
2.7	5691	2.5	509	7.5	**GTN09 L4**	—	**BN90LB4**	—	—	—	82700	106600	25700
2.8	5502	1.0	492	6.0	**GTN05 L4**	—	**BN90LB4**	—	26400	30500	45800	55100	16900
2.8	5482	1.7	490	15.0	—	**GTN07 R4**	**BN90LB4**	—	36500	45800	80500	105400	31700
2.8	5482	2.6	490	15.0	—	**GTN09 R4**	**BN90LB4**	—	—	—	81700	105400	25400
2.8	5455	1.7	488	12.0	—	**GTN06 R4**	**BN90LB4**	—	32800	37100	74700	87000	24600
3.0	5195	2.3	465	7.5	**GTN07 L4**	—	**BN90LB4**	—	35800	45000	79200	103700	31200
3.0	5106	2.7	457	15.0	—	**GTN09 R4**	**BN90LB4**	—	—	—	80000	103200	24800
3.1	5081	1.4	455	12.0	—	**GTN06 R4**	**BN90LB4**	—	32000	36300	73100	85100	24100
3.1	5061	2.6	453	15.0	—	**GTN07 R4**	**BN90LB4**	—	35500	44600	78600	102900	30900
3.1	5048	0.9	452	12.0	—	**GTN05 R4**	**BN90LB4**	—	25700	29600	44600	53700	16500
3.1	4980	1.1	446	6.0	**GTN05 L4**	—	**BN90LB4**	—	25500	29500	44400	53400	16400
3.1	4965	2.0	444	6.0	**GTN06 L4**	—	**BN90LB4**	—	31800	36000	72600	84500	23900
3.3	4692	1.9	420	12.0	—	**GTN06 R4**	**BN90LB4**	—	31200	35300	71400	83100	23400
3.4	4619	2.6	413	15.0	—	**GTN07 R4**	**BN90LB4**	—	34500	43200	76400	100100	30000
3.4	4618	1.0	413	6.0	**GTN05 L4**	—	**BN90LB4**	—	24900	28800	43400	52200	16000
3.4	4532	2.6	406	7.5	**GTN07 L4**	—	**BN90LB4**	—	34300	43000	76000	99600	29800
3.4	4681	1.2	405	7.5	**GTN06 L3**	—	**BN90LB4**	—	30800	34900	70600	82200	23100
3.6	4369	1.6	391	6.0	**GTN06 L4**	—	**BN90LB4**	—	30400	34500	69900	81400	22900
3.6	4347	1.7	389	12.0	—	**GTN06 R4**	**BN90LB4**	—	30400	34400	69800	81200	22800
3.8	4067	1.1	364	12.0	—	**GTN05 R4**	**BN90LB4**	—	23900	27600	41800	50300	15300
4.1	3888	2.3	336	11.0	**GTN07 L3**	—	**BN90LB4**	—	32200	40400	71900	94200	28000
4.1	3751	1.2	336	12.0	—	**GTN05 R4**	**BN90LB4**	—	23200	26800	40800	49100	14900
4.3	3750	1.5	325	7.5	**GTN06 L3**	—	**BN90LB4**	—	28600	32400	66100	76900	21500
4.3	3715	1.0	321	7.5	**GTN05 L3**	—	**BN90LB4**	—	22900	26400	40300	48500	14700

P_1 = 1.85 kW

n_2 min^{-1}	M_2 Nm	S	i	Pt kW					Rn_2 [N] LK	LS	HK/MK	HS/MS	LSH
4.4	3494	1.0	313	12.0	—	GNT05 R4	BN90LB4	—	22700	26200	39900	48100	14600
4.5	3483	2.2	312	12.0	—	GNT06 R4	BN90LB4	—	28200	32000	65300	76000	21200
4.5	3426	1.0	307	12.0	—	GNT04 R4	BN90LB4	—	22500	26000	39700	47800	14500
4.8	3241	1.1	290	12.0	—	GNT04 R4	BN90LB4	—	22100	25600	39100	47000	14200
4.8	3241	1.6	290	12.0	—	GNT05 R4	BN90LB4	—	22100	25600	39100	47000	14200
4.8	3230	2.6	289	12.0	—	GNT06 R4	BN90LB4	—	27500	31200	63800	74300	20700
4.8	3328	1.7	288	7.5	GNT06 L3	—	BN90LB4	—	27500	31200	63700	74200	20700
5.0	3195	1.4	276	7.5	GNT05 L3	—	BN90LB4	—	21800	25200	38500	46300	14000
5.2	3100	1.8	268	7.5	GNT06 L3	—	BN90LB4	—	26900	30400	62400	72700	20200
5.2	2989	1.2	267	12.0	—	GNT04 R4	BN90LB4	—	21500	24900	38100	45900	13800
5.4	2976	1.2	258	7.5	GNT05 L3	—	BN90LB4	—	21300	24600	37700	45300	13600
5.4	2852	1.3	255	12.0	—	GNT05 R4	BN90LB4	—	21200	24500	37600	45200	13600
5.6	2778	3.0	249	12.0	—	GNT06 R4	BN90LB4	—	26200	29700	61000	71000	19700
5.8	2751	3.0	238	7.5	GNT06 L3	—	BN90LB4	—	25800	29200	60200	70100	19400
6.0	2582	1.4	231	12.0	—	GNT05 R4	BN90LB4	—	20500	23700	36500	43900	13200
6.0	2574	2.9	230	12.0	—	GNT06 R4	BN90LB4	—	25500	28900	59600	69400	19200
6.1	2532	1.4	227	12.0	—	GNT04 R4	BN90LB4	—	20400	23500	36300	43600	13100
6.3	2563	2.5	222	7.5	GNT06 L3	—	BN90LB4	—	25200	28600	58900	68600	18900
6.3	2546	1.4	220	7.5	GNT04 L3	—	BN90LB4	—	20200	23300	36000	43300	13000
6.3	2546	1.9	220	7.5	GNT05 L3	—	BN90LB4	—	20200	23300	36000	43300	13000
6.5	2395	1.1	214	12.0	—	GNT03 R4	BN90LB4	—	20000	23100	35700	42900	12800
6.5	2395	1.5	214	12.0	—	GNT04 R4	BN90LB4	—	20000	23100	35700	42900	12800
6.5	2395	2.3	214	12.0	—	GNT05 R4	BN90LB4	—	20000	23100	35700	42900	12800
6.9	2331	1.0	202	7.5	GNT04 L3	—	BN90LB4	—	19600	22600	35000	42100	12600
7.3	2199	1.6	190	7.5	GNT05 L3	—	BN90LB4	—	19200	22200	34400	41400	12300
7.3	2193	3.0	190	7.5	GNT06 L3	—	BN90LB4	—	23900	27100	56200	65500	18000
7.5	2067	1.1	185	12.0	—	GNT03 R4	BN90LB4	—	19100	22000	34100	41100	12200
7.5	2067	1.7	185	12.0	—	GNT04 R4	BN90LB4	—	19100	22000	34100	41100	12200
7.5	2067	2.2	185	12.0	—	GNT05 R4	BN90LB4	—	19100	22000	34100	41100	12200
7.8	2052	1.1	178	7.5	GNT03 L3	—	BN90LB4	—	18800	21700	33700	40600	12100
7.8	2052	1.4	178	7.5	GNT04 L3	—	BN90LB4	—	18800	21700	33700	40600	12100
7.8	2052	2.2	178	7.5	GNT05 L3	—	BN90LB4	—	18800	21700	33700	40600	12100
7.9	1961	0.9	175	10.0	—	GNT01 R4	BN90LB4	—	5950	5950	16100	18500	3910
8.4	1903	1.3	165	7.5	GNT04 L3	—	BN90LB4	—	18300	21200	33000	39600	11800
8.5	1892	1.2	164	7.5	GNT03 L3	—	BN90LB4	—	18300	21100	32900	39600	11700
8.5	1892	2.3	164	7.5	GNT05 L3	—	BN90LB4	—	18300	21100	32900	39600	11700
8.8	1775	1.0	159	10.0	—	GNT01 R4	BN90LB4	—	5890	5890	16000	18300	3870
8.8	1770	1.5	158	12.0	—	GNT03 R4	BN90LB4	—	18100	20900	32600	39200	11600
8.8	1770	2.0	158	12.0	—	GNT04 R4	BN90LB4	—	18100	20900	32600	39200	11600
9.1	1762	1.0	152	7.5	GNT03 L3	—	BN90LB4	—	17900	20600	32200	38700	11500
9.1	1762	2.0	152	7.5	GNT05 L3	—	BN90LB4	—	17900	20600	32200	38700	11500
9.3	1728	2.0	150	7.5	GNT04 L3	—	BN90LB4	—	17800	20500	32000	38500	11400
9.4	1656	2.1	148	12.0	—	GNT04 R4	BN90LB4	—	17700	20400	31900	38400	11400
9.4	1656	1.4	148	12.0	—	GNT03 R4	BN90LB4	—	17700	20400	31900	38400	11400
9.4	1656	2.7	148	12.0	—	GNT05 R4	BN90LB4	—	17700	20400	31900	38400	11400
9.8	1640	1.0	142	7.5	GNT01 L3	—	BN90LB4	—	5670	5670	15400	17700	3730
9.8	1635	1.6	141	7.5	GNT03 L3	—	BN90LB4	—	17400	20100	31500	37900	11200
9.8	1635	2.2	141	7.5	GNT04 L3	—	BN90LB4	—	17400	20100	31500	37900	11200
10.6	1512	1.1	131	7.5	GNT01 L3	—	BN90LB4	—	5520	5520	15100	17300	3630
10.7	1508	2.3	130	7.5	GNT04 L3	—	BN90LB4	—	17000	19600	30700	37000	10900
10.7	1449	1.2	130	10.0	—	GNT01 R4	BN90LB4	—	5510	5510	15000	17300	3620
10.8	1445	1.8	129	12.0	—	GNT03 R4	BN90LB4	—	16900	19500	30600	36900	10800
10.8	1445	2.4	129	12.0	—	GNT04 R4	BN90LB4	—	16900	19500	30600	36900	10800
11.2	1439	1.3	124	7.5	GNT03 L3	—	BN90LB4	—	16700	19300	30300	36500	10700
11.2	1439	2.5	124	7.5	GNT05 L3	—	BN90LB4	—	16700	19300	30300	36500	10700
11.5	1401	1.7	121	14.0	—	GNT04 R3	BN90LB4	—	16600	19100	30100	36200	10600
12.0	1339	1.0	116	7.5	GNT01 L3	—	BN90LB4	—	5300	5300	14500	16700	3490
12.2	1322	1.4	114	14.0	—	GNT03 R3	BN90LB4	—	16200	18700	29500	35500	10400
12.2	1322	2.7	114	14.0	—	GNT05 R3	BN90LB4	—	16200	18700	29500	35500	10400
12.3	1302	1.4	113	7.5	GNT03 L3	—	BN90LB4	—	16200	18600	29400	35400	10400
12.3	1302	2.8	113	7.5	GNT05 L3	—	BN90LB4	—	16200	18600	29400	35400	10400
12.6	1277	2.6	111	7.5	GNT04 L3	—	BN90LB4	—	16000	18500	29200	35200	10300
12.7	1224	2.8	109	12.0	—	GNT04 R4	BN90LB4	—	16000	18500	29200	35100	10300
13.1	1230	1.1	106	12.0	—	GNT01 R3	BN90LB4	—	5160	5160	14200	16300	3390
13.1	1183	1.4	106	10.0	—	GNT01 R4	BN90LB4	—	5150	5150	14100	16200	3380
13.3	1212	1.4	105	7.5	GNT01 L3	—	BN90LB4	—	5130	5130	14100	16200	3370
13.3	1208	2.1	105	7.5	GNT03 L3	—	BN90LB4	—	15800	18200	28800	34600	10100

A

A

P_1 = 1.85 kW

n_2 min^{-1}	M_2 Nm	S	i	Pt kW					Rn_2 [N] LK	LS	HK/MK	HS/MS	LSH
13.3	1208	2.9	105	7.5	GTN04 L3	—	BN90LB4	—	15800	18200	28800	34600	10100
14.3	1121	2.1	97.0	14.0	—	GTN04 R3	BN90LB4	—	15400	17700	28100	33800	9860
15.2	1058	1.7	91.5	14.0	—	GTN03 R3	BN90LB4	—	15100	17400	27600	33200	9670
15.4	1042	2.2	90.2	7.5	GTN03 L3	—	BN90LB4	—	15000	17300	27500	33100	9620
16.2	989	1.7	85.6	7.5	GTN01 L3	—	BN90LB4	—	4790	4790	13300	15200	3150
16.3	984	1.3	85.2	12.0	—	GTN01 R3	BN90LB4	—	4790	4790	13200	15200	3150
17.7	910	2.4	78.7	14.0	—	GTN03 R3	BN90LB4	—	14300	16500	26400	31800	9190
17.7	909	0.9	78.7	12.0	—	GTN00 R3	BN90LB4	—	4660	4660	12900	14900	3060
17.7	909	1.7	78.7	12.0	—	GTN01 R3	BN90LB4	—	4660	4660	12900	14900	3060
17.9	895	0.9	77.5	7.5	GTN00 L3	—	BN90LB4	—	4640	4640	12900	14800	3050
17.9	895	1.9	77.5	7.5	GTN01 L3	—	BN90LB4	—	4640	4640	12900	14800	3050
18.0	893	2.8	77.2	7.5	GTN03 L3	—	BN90LB4	—	14200	16400	26300	31600	9140
19.0	847	2.1	73.3	14.0	—	GTN03 R3	BN90LB4	—	14000	16200	25900	31100	8980
19.2	835	2.7	72.3	7.5	GTN03 L3	—	BN90LB4	—	13900	16100	25700	31000	8940
19.9	807	1.6	69.9	7.5	GTN01 L3	—	BN90LB4	—	4480	4480	12500	14300	2950
20.4	789	1.6	68.2	12.0	—	GTN01 R3	BN90LB4	—	4440	4440	12400	14200	2920
21.5	774	1.5	64.8	7.5	GTN01 L2	—	BN90LB4	—	4370	4370	12200	14000	2870
22.0	731	1.2	63.2	7.5	GTN00 L3	—	BN90LB4	—	4330	4330	12100	13900	2850
22.0	731	2.3	63.2	7.5	GTN01 L3	—	BN90LB4	—	4330	4330	12100	13900	2850
22.0	729	3.0	63.1	14.0	—	GTN03 R3	BN90LB4	—	13300	15400	24700	29700	8540
22.1	727	1.2	62.9	12.0	—	GTN00 R3	BN90LB4	—	4330	4330	12100	13900	2840
22.1	727	2.3	62.9	12.0	—	GTN01 R3	BN90LB4	—	4330	4330	12100	13900	2840
24.9	666	2.7	55.8	9.0	GTN03 L2	—	BN90LB4	—	12800	14800	23800	28700	8200
25.7	626	2.9	54.2	14.0	—	GTN03 R3	BN90LB4	—	12700	14600	23600	28400	8120
26.8	620	1.0	51.9	7.5	GTN00 L2	—	BN90LB4	—	4060	4060	11400	13100	2670
26.8	620	2.1	51.9	7.5	GTN01 L2	—	BN90LB4	—	4060	4060	11400	13100	2670
26.9	597	1.4	51.6	7.5	GTN00 L3	—	BN90LB4	—	4050	4050	11400	13100	2660
26.9	597	2.7	51.6	7.5	GTN01 L3	—	BN90LB4	—	4050	4050	11400	13100	2660
27.6	583	1.5	50.4	12.0	—	GTN00 R3	BN90LB4	—	4020	4020	11300	13000	2640
27.6	583	2.8	50.4	12.0	—	GTN01 R3	BN90LB4	—	4020	4020	11300	13000	2640
33	496	1.3	41.5	7.5	GTN00 L2	—	BN90LB4	—	3770	3770	10700	12300	2480
33	496	2.6	41.5	7.5	GTN01 L2	—	BN90LB4	—	3770	3770	10700	12300	2480
34	476	1.4	41.2	12.0	—	GTN00 R3	BN90LB4	—	3760	3760	10600	12200	2470
34	476	2.7	41.2	12.0	—	GTN01 R3	BN90LB4	—	3760	3760	10600	12200	2470
36	458	1.8	38.4	7.5	GTN00 L2	—	BN90LB4	—	3670	3670	10400	12000	2410
37	431	2.0	37.3	12.0	—	GTN00 R3	BN90LB4	—	3630	3630	10300	11900	2390
42	397	1.6	33.3	7.5	GTN00 L2	—	BN90LB4	—	3500	3500	9990	11500	2300
45	366	2.3	30.7	7.5	GTN00 L2	—	BN90LB4	—	3410	3410	9750	11200	2240
46	351	2.4	30.4	12.0	—	GTN00 R3	BN90LB4	—	3400	3400	9730	11200	2230
56	287	2.5	24.8	12.0	—	GTN00 R3	BN90LB4	—	3170	3170	9150	10500	2090
56	296	2.9	24.8	18.0	—	GTN03 R2	BN90LB4	—	9750	11300	18700	22500	6250
57	294	2.7	24.6	7.5	GTN00 L2	—	BN90LB4	—	3160	3160	9130	10500	2080
69	240	2.7	20.1	7.5	GTN00 L2	—	BN90LB4	—	2960	2960	8590	9870	1940
75	220	1.7	18.5	12.0	—	GTN00 R2	BN90LB4	—	2870	2870	8370	9620	1890
94	176	2.9	14.8	12.0	—	GTN00 R2	BN90LB4	—	2670	2670	7830	9000	1750
154	111	2.9	9.0	7.5	GTN00 L3	—	BN90LB4	—	2260	2260	6750	7750	1490

P_1 = 2.2 kW

n_2 min^{-1}	M_2 Nm	S	i	Pt kW					Rn_2 [N] LK	LS	HK/MK	HS/MS	LSH
0.64	28676	1.7	2187	11.0	GTN13 L4	—	BN100LA4	—	—	—	192000	231000	80000
0.67	27488	1.2	2096	11.0	GTN11 L4	—	BN100LA4	—	—	—	157000	195000	65000
0.70	26513	1.0	2022	11.0	GTN10 L4	—	BN100LA4	—	—	—	133000	166000	65000
0.78	23823	2.4	1817	11.0	GTN13 L4	—	BN100LA4	—	—	—	192000	231000	80000
0.79	23529	1.1	1794	11.0	GTN10 L4	—	BN100LA4	—	—	—	133000	166000	65000
0.80	23161	1.9	1766	11.0	GTN11 L4	—	BN100LA4	—	—	—	157000	195000	65000
0.84	22026	1.5	1680	11.0	GTN11 L4	—	BN100LA4	—	—	—	157000	195000	65000
0.84	21917	1.2	1672	11.0	GTN10 L4	—	BN100LA4	—	—	—	133000	166000	65000
0.94	19694	2.9	1502	11.0	GTN13 L4	—	BN100LA4	—	—	—	192000	231000	80000
0.98	18853	1.4	1438	11.0	GTN10 L4	—	BN100LA4	—	—	—	133000	166000	65000
1.0	18559	2.3	1415	11.0	GTN11 L4	—	BN100LA4	—	—	—	157000	195000	65000
1.0	18277	2.9	1394	11.0	GTN13 L4	—	BN100LA4	—	—	—	192000	229000	79900
1.0	18099	0.9	1380	7.5	GTN09 L4	—	BN100LA4	—	—	—	110000	143800	35800

P_1 = 2.2 kW

n_2 min^{-1}	M_2 Nm	S	i	Pt kW					Rn_2 [N] LK	LS	HK/MK	HS/MS	LSH
1.1	16859	1.0	1286	7.5	GTN09 L4	—	BN100LA4	—	—	—	109200	140800	35000
1.1	16508	1.7	1259	11.0	GTN10 L4	—	BN100LA4	—	—	—	128500	161600	62700
1.1	16133	2.7	1230	11.0	GTN11 L4	—	BN100LA4	—	—	—	150800	187900	62300
1.2	15266	1.9	1164	11.0	GTN10 L4	—	BN100LA4	—	—	—	125500	157900	61100
1.2	15166	0.9	1157	7.5	GTN07 L4	—	BN100LA4	M3LA4	47500	59600	101900	133600	41300
1.2	15070	1.1	1149	7.5	GTN09 L4	—	BN100LA4	—	—	—	105500	136100	33700
1.4	13382	2.1	1021	11.0	GTN10 L4	—	BN100LA4	—	—	—	120700	151800	58500
1.4	13100	1.1	999	7.5	GTN07 L4	—	BN100LA4	M3LA4	46300	58000	99600	130500	40200
1.4	13100	1.4	999	7.5	GTN09 L4	—	BN100LA4	—	—	—	101200	130500	32200
1.5	12310	2.7	939	11.0	GTN10 L4	—	BN100LA4	—	—	—	117700	148000	56900
1.6	11883	1.3	906	7.5	GTN07 L4	—	BN100LA4	M3LA4	44800	56200	96700	126800	38900
1.6	11883	1.5	906	7.5	GTN09 L4	—	BN100LA4	—	—	—	98300	126800	31100
1.6	11776	2.0	898	15.0	—	GTN10 R4	BN100LA4	—	—	—	116100	146000	56100
1.7	10723	2.6	818	11.0	GTN10 L4	—	BN100LA4	—	—	—	112900	142000	54300
1.8	10497	1.3	801	7.5	GTN07 L4	—	BN100LA4	M3LA4	43000	53900	93200	122100	37400
1.8	10497	1.7	801	7.5	GTN09 L4	—	BN100LA4	—	—	—	94700	122100	29900
1.9	9922	2.7	757	15.0	—	GTN10 R4	BN100LA4	—	—	—	110300	138700	52900
1.9	9516	2.8	726	11.0	GTN10 L4	—	BN100LA4	—	—	—	108900	137000	52200
2.0	9470	1.6	722	7.5	GTN07 L4	—	BN100LA4	M3LA4	41500	52100	90400	118400	36100
2.0	9470	2.2	722	7.5	GTN09 L4	—	BN100LA4	—	—	—	91800	118400	28900
2.0	9173	1.0	700	6.0	GTN06 L4	—	BN100LA4	M3LA4	37000	41900	83200	96900	27800
2.0	9044	1.1	690	15.0	—	GTN07 R4	BN100LA4	M3LA4	40900	51300	89100	116800	35500
2.0	9044	1.6	690	15.0	—	GTN09 R4	BN100LA4	—	—	—	90600	116800	28400
2.2	8569	1.5	654	7.5	GTN07 L4	—	BN100LA4	M3LA4	40200	50400	87700	114900	34900
2.2	8569	2.1	654	7.5	GTN09 L4	—	BN100LA4	—	—	—	89100	114900	27900
2.2	8374	2.6	639	15.0	—	GTN10 R4	BN100LA4	—	—	—	104800	131800	50000
2.2	8333	1.1	636	6.0	GTN06 L4	—	BN100LA4	M3LA4	35800	40600	80800	94100	26900
2.4	7741	1.1	590	12.0	—	GTN06 R4	BN100LA4	M3LA4	34900	39600	79100	92100	26200
2.4	7732	2.8	590	15.0	—	GTN10 R4	BN100LA4	—	—	—	102400	128700	48700
2.4	7727	1.2	589	6.0	GTN06 L4	—	BN100LA4	M3LA4	34900	39600	79000	92000	26200
2.4	7620	1.7	581	15.0	—	GTN07 R4	BN100LA4	M3LA4	38600	48500	84700	110900	33600
2.4	7620	2.1	581	15.0	—	GTN09 R4	BN100LA4	—	—	—	86000	110900	26900
2.4	7588	2.0	579	7.5	GTN07 L4	—	BN100LA4	M3LA4	38600	48400	84500	110800	33500
2.4	7588	2.8	579	7.5	GTN09 L4	—	BN100LA4	—	—	—	85900	110800	26800
2.6	7211	1.0	550	12.0	—	GTN06 R4	BN100LA4	M3LA4	34100	38700	77400	90100	25600
2.8	6677	1.4	509	6.0	GTN06 L4	—	BN100LA4	M3LA4	33300	37700	75600	88100	25000
2.8	6677	2.1	509	7.5	GTN07 L4	—	BN100LA4	M3LA4	37000	46400	81400	106600	32100
2.8	6677	2.1	509	7.5	GTN09 L4	—	BN100LA4	—	—	—	82700	106600	25700
2.9	6431	1.5	490	15.0	—	GTN07 R4	BN100LA4	M3LA4	36500	45800	80500	105400	31700
2.9	6431	2.2	490	15.0	—	GTN09 R4	BN100LA4	—	—	—	81700	105400	25400
2.9	6399	1.4	488	12.0	—	GTN06 R4	BN100LA4	M3LA4	32800	37100	74700	87000	24600
3.0	6095	2.0	465	7.5	GTN07 L4	—	BN100LA4	M3LA4	35800	45000	79200	103700	31200
3.1	5991	2.3	457	15.0	—	GTN09 R4	BN100LA4	—	—	—	80000	103200	24800
3.1	5961	1.2	455	12.0	—	GTN06 R4	BN100LA4	M3LA4	32000	36300	73100	85100	24100
3.1	5938	2.3	453	15.0	—	GTN07 R4	BN100LA4	M3LA4	35500	44600	78600	102900	30900
3.2	5843	0.9	446	6.0	GTN05 L4	—	BN100LA4	M3LA4	25500	29500	44400	53400	16400
3.2	5825	1.7	444	6.0	GTN06 L4	—	BN100LA4	M3LA4	31800	36000	72600	84500	23900
3.4	5505	1.6	420	12.0	—	GTN06 R4	BN100LA4	M3LA4	31200	35300	71400	83100	23400
3.4	5419	2.2	413	15.0	—	GTN07 R4	BN100LA4	M3LA4	34500	43200	76400	100100	30000
3.5	5317	2.2	406	7.5	GTN07 L4	—	BN100LA4	M3LA4	34300	43000	76000	99600	29800
3.5	5491	1.0	405	7.5	GTN06 L3	—	BN100LA4	M3LA4	30800	34900	70600	82200	23100
3.6	5126	1.3	391	6.0	GTN06 L4	—	BN100LA4	M3LA4	30400	34500	69900	81400	22900
3.6	5100	1.5	389	12.0	—	GTN06 R4	BN100LA4	M3LA4	30400	34400	69800	81200	22800
3.8	4909	2.9	374	15.0	—	GTN09 R4	BN100LA4	—	—	—	75400	97200	23200
3.9	4772	1.0	364	12.0	—	GTN05 R4	BN100LA4	M3LA4	23900	27600	41800	50300	15300
3.9	4758	2.6	363	15.0	—	GTN07 R4	BN100LA4	M3LA4	33000	41400	73500	96300	28700
4.2	4562	1.9	336	11.0	GTN07 L3	—	BN100LA4	M3LA4	32200	40400	71900	94200	28000
4.2	4562	2.9	336	11.0	GTN09 L3	—	BN100LA4	—	—	—	73000	94200	22400
4.2	4400	1.0	336	12.0	—	GTN05 R4	BN100LA4	M3LA4	23200	26800	40800	49100	14900
4.3	4342	2.6	331	15.0	—	GTN07 R4	BN100LA4	M3LA4	32000	40200	71500	93700	27800
4.3	4400	1.3	325	7.5	GTN06 L3	—	BN100LA4	M3LA4	28600	32400	66100	76900	21500
4.5	4086	1.9	312	12.0	—	GTN06 R4	BN100LA4	M3LA4	28200	32000	65300	76000	21200
4.9	3802	1.0	290	12.0	—	GTN04 R4	BN100LA4	M3LA4	22100	25600	39100	47000	14200
4.9	3802	1.4	290	12.0	—	GTN05 R4	BN100LA4	M3LA4	22100	25600	39100	47000	14200
4.9	3789	2.2	289	12.0	—	GTN06 R4	BN100LA4	M3LA4	27500	31200	63800	74300	20700
4.9	3905	1.4	288	7.5	GTN06 L3	—	BN100LA4	M3LA4	27500	31200	63700	74200	20700
5.0	3844	2.9	284	11.0	GTN07 L3	—	BN100LA4	M3LA4	30400	38100	68300	89400	26400

A

A

P_1 = 2.2 kW

n_2 min^{-1}	M_2 Nm	S	i	Pt kW					Rn_2 [N] LK	LS	HK/MK	HS/MS	LSH
5.1	3749	1.2	276	7.5	GTN05 L3	—	BN100LA4	M3LA4	21800	25200	38500	46300	14000
5.3	3637	1.5	268	7.5	GTN06 L3	—	BN100LA4	M3LA4	26900	30400	62400	72700	20200
5.3	3507	1.0	267	12.0	—	GTN04 R4	BN100LA4	M3LA4	21500	24900	38100	45900	13800
5.5	3492	1.0	258	7.5	GTN05 L3	—	BN100LA4	M3LA4	21300	24600	37700	45300	13600
5.5	3346	1.1	255	12.0	—	GTN05 R4	BN100LA4	M3LA4	21200	24500	37600	45200	13600
5.7	3260	2.5	249	12.0	—	GTN06 R4	BN100LA4	M3LA4	26200	29700	61000	71000	19700
5.9	3244	2.7	239	11.0	GTN07 L3	—	BN100LA4	M3LA4	28700	36000	64900	85000	25000
5.9	3228	2.5	238	7.5	GTN06 L3	—	BN100LA4	M3LA4	25800	29200	60200	70100	19400
6.1	3029	1.2	231	12.0	—	GTN05 R4	BN100LA4	M3LA4	20500	23700	36500	43900	13200
6.1	3019	2.5	230	12.0	—	GTN06 R4	BN100LA4	M3LA4	25500	28900	59600	69400	19200
6.2	2970	1.2	227	12.0	—	GTN04 R4	BN100LA4	M3LA4	20400	23500	36300	43600	13100
6.4	3007	2.2	222	7.5	GTN06 L3	—	BN100LA4	M3LA4	25200	28600	58900	68600	18900
6.4	2987	1.2	220	7.5	GTN04 L3	—	BN100LA4	M3LA4	20200	23300	36000	43300	13000
6.4	2987	1.6	220	7.5	GTN05 L3	—	BN100LA4	M3LA4	20200	23300	36000	43300	13000
6.6	2810	1.0	214	12.0	—	GTN03 R4	BN100LA4	M3LA4	20000	23100	35700	42900	12800
6.6	2810	1.3	214	12.0	—	GTN04 R4	BN100LA4	M3LA4	20000	23100	35700	42900	12800
6.6	2810	1.9	214	12.0	—	GTN05 R4	BN100LA4	M3LA4	20000	23100	35700	42900	12800
6.9	2777	2.9	205	7.5	GTN06 L3	—	BN100LA4	M3LA4	24500	27800	57600	67000	18400
7.4	2580	1.4	190	7.5	GTN05 L3	—	BN100LA4	M3LA4	19200	22200	34400	41400	12300
7.4	2572	2.5	190	7.5	GTN06 L3	—	BN100LA4	M3LA4	23900	27100	56200	65500	18000
7.6	2425	1.0	185	12.0	—	GTN03 R4	BN100LA4	M3LA4	18600	21500	33400	40200	11900
7.6	2425	1.4	185	12.0	—	GTN04 R4	BN100LA4	M3LA4	19100	22000	34100	41100	12200
7.6	2425	1.9	185	12.0	—	GTN05 R4	BN100LA4	M3LA4	19100	22000	34100	41100	12200
7.9	2407	0.9	178	7.5	GTN03 L3	—	BN100LA4	M3LA4	18800	21700	33700	40600	12100
7.9	2407	1.2	178	7.5	GTN04 L3	—	BN100LA4	M3LA4	18800	21700	33700	40600	12100
7.9	2407	1.8	178	7.5	GTN05 L3	—	BN100LA4	M3LA4	18800	21700	33700	40600	12100
8.6	2233	1.1	165	7.5	GTN04 L3	—	BN100LA4	M3LA4	18300	21200	33000	39600	11800
8.6	2220	1.0	164	7.5	GTN03 L3	—	BN100LA4	M3LA4	18300	21100	32900	39600	11700
8.6	2220	2.0	164	7.5	GTN05 L3	—	BN100LA4	M3LA4	18300	21100	32900	39600	11700
8.9	2076	1.3	158	12.0	—	GTN03 R4	BN100LA4	M3LA4	18100	20900	32600	39200	11600
8.9	2076	1.7	158	12.0	—	GTN04 R4	BN100LA4	M3LA4	18100	20900	32600	39200	11600
8.9	2076	2.6	158	12.0	—	GTN05 R4	BN100LA4	M3LA4	18100	20900	32600	39200	11600
9.2	2068	1.7	152	7.5	GTN05 L3	—	BN100LA4	M3LA4	17900	20600	32200	38700	11500
9.4	2028	1.7	150	7.5	GTN04 L3	—	BN100LA4	M3LA4	17800	20500	32000	38500	11400
9.5	1943	1.8	148	12.0	—	GTN04 R4	BN100LA4	M3LA4	17700	20400	31900	38400	11400
9.5	1943	1.2	148	12.0	—	GTN03 R4	BN100LA4	M3LA4	17700	20400	31900	38400	11400
9.5	1943	2.3	148	12.0	—	GTN05 R4	BN100LA4	M3LA4	17700	20400	31900	38400	11400
9.8	1954	2.8	144	14.0	—	GTN06 R3	BN100LA4	M3LA4	21800	24700	51800	60300	16400
10.0	1918	1.4	141	7.5	GTN03 L3	—	BN100LA4	M3LA4	17400	20100	31500	37900	11200
10.0	1918	1.8	141	7.5	GTN04 L3	—	BN100LA4	M3LA4	17400	20100	31500	37900	11200
10.0	1918	2.7	141	7.5	GTN05 L3	—	BN100LA4	M3LA4	17400	20100	31500	37900	11200
10.8	1774	1.0	131	7.5	GTN01 L3	—	BN100LA4	M3LA4	5520	5520	15100	17300	3630
10.8	1769	2.0	130	7.5	GTN04 L3	—	BN100LA4	M3LA4	17000	19600	30700	37000	10900
10.9	1700	1.0	130	10.0	—	GTN01 R4	BN100LA4	M3LA4	5510	5510	15000	17300	3620
10.9	1695	1.5	129	12.0	—	GTN03 R4	BN100LA4	M3LA4	16900	19500	30600	36900	10800
10.9	1695	2.1	129	12.0	—	GTN04 R4	BN100LA4	M3LA4	16900	19500	30600	36900	10800
11.3	1688	1.1	124	7.5	GTN03 L3	—	BN100LA4	M3LA4	16700	19300	30300	36500	10700
11.3	1688	2.1	124	7.5	GTN05 L3	—	BN100LA4	M3LA4	16700	19300	30300	36500	10700
11.6	1644	1.5	121	14.0	—	GTN04 R3	BN100LA4	M3LA4	16600	19100	30100	36200	10600
12.3	1551	1.2	114	14.0	—	GTN03 R3	BN100LA4	M3LA4	16200	18700	29500	35500	10400
12.3	1551	2.3	114	14.0	—	GTN05 R3	BN100LA4	M3LA4	16200	18700	29500	35500	10400
12.5	1528	1.2	113	7.5	GTN03 L3	—	BN100LA4	M3LA4	16200	18600	29400	35400	10400
12.5	1528	2.3	113	7.5	GTN05 L3	—	BN100LA4	M3LA4	16200	18600	29400	35400	10400
12.8	1498	2.3	111	7.5	GTN04 L3	—	BN100LA4	M3LA4	16000	18500	29200	35200	10300
12.9	1436	2.3	109	12.0	—	GTN04 R4	BN100LA4	M3LA4	16000	18500	29200	35100	10300
13.2	1443	0.9	106	12.0	—	GTN01 R3	BN100LA4	M3LA4	5160	5160	14200	16300	3390
13.3	1388	1.2	106	10.0	—	GTN01 R4	BN100LA4	M3LA4	5150	5150	14100	16200	3380
13.4	1422	1.2	105	7.5	GTN01 L3	—	BN100LA4	M3LA4	5130	5130	14100	16200	3370
13.5	1417	1.8	105	7.5	GTN03 L3	—	BN100LA4	M3LA4	15800	18200	28800	34600	10100
13.5	1417	2.5	105	7.5	GTN04 L3	—	BN100LA4	M3LA4	15800	18200	28800	34600	10100
14.5	1315	1.8	97.0	14.0	—	GTN04 R3	BN100LA4	M3LA4	15400	17700	28100	33800	9860
15.4	1241	1.5	91.5	14.0	—	GTN03 R3	BN100LA4	M3LA4	15100	17400	27600	33200	9670
15.4	1241	2.9	91.5	14.0	—	GTN05 R3	BN100LA4	M3LA4	15100	17400	27600	33200	9670
15.6	1223	1.8	90.2	7.5	GTN03 L3	—	BN100LA4	M3LA4	15000	17300	27500	33100	9620
15.6	1223	2.7	90.2	7.5	GTN04 L3	—	BN100LA4	M3LA4	15000	17300	27500	33100	9620
15.8	1172	2.8	89.4	12.0	—	GTN04 R4	BN100LA4	M3LA4	15000	17300	27400	33000	9590
16.5	1161	1.4	85.6	7.5	GTN01 L3	—	BN100LA4	M3LA4	4790	4790	13300	15200	3150

P_1 = 2.2 kW

n_2 min^{-1}	M_2 Nm	S	i	Pt kW					Rn_2 [N] LK	LS	HK/MK	HS/MS	LSH
16.6	1155	1.1	85.2	12.0	—	GTN01 R3	BN100LA4	M3LA4	4790	4790	13200	15200	3150
17.9	1067	2.0	78.7	14.0	—	GTN03 R3	BN100LA4	M3LA4	14300	16500	26400	31800	9190
17.9	1067	2.7	78.7	14.0	—	GTN04 R3	BN100LA4	M3LA4	14300	16500	26400	31800	9190
17.9	1066	1.5	78.7	12.0	—	GTN01 R3	BN100LA4	M3LA4	4660	4660	12900	14900	3060
18.2	1051	1.6	77.5	7.5	GTN01 L3	—	BN100LA4	M3LA4	4640	4640	12900	14800	3050
18.3	1047	2.4	77.2	7.5	GTN03 L3	—	BN100LA4	M3LA4	14200	16400	26300	31600	9140
19.2	994	1.8	73.3	14.0	—	GTN03 R3	BN100LA4	M3LA4	14000	16200	25900	31100	8980
19.5	980	2.3	72.3	7.5	GTN03 L3	—	BN100LA4	M3LA4	13900	16100	25700	31000	8940
20.2	947	1.4	69.9	7.5	GTN01 L3	—	BN100LA4	M3LA4	4480	4480	12500	14300	2950
20.7	925	1.4	68.2	12.0	—	GTN01 R3	BN100LA4	M3LA4	4440	4440	12400	14200	2920
21.8	908	1.3	64.8	7.5	GTN01 L2	—	BN100LA4	M3LA4	4370	4370	12200	14000	2870
22.3	858	1.0	63.2	7.5	GTN00 L3	—	BN100LA4	M3LA4	4330	4330	12100	13900	2850
22.3	858	1.9	63.2	7.5	GTN01 L3	—	BN100LA4	M3LA4	4330	4330	12100	13900	2850
22.4	855	2.5	63.1	14.0	—	GTN03 R3	BN100LA4	M3LA4	13300	15400	24700	29700	8540
22.4	855	2.9	63.1	7.5	GTN03 L3	—	BN100LA4	M3LA4	13300	15400	24700	29700	8540
22.4	853	1.0	62.9	12.0	—	GTN00 R3	BN100LA4	M3LA4	4330	4330	12100	13900	2840
22.4	853	1.9	62.9	12.0	—	GTN01 R3	BN100LA4	M3LA4	4330	4330	12100	13900	2840
23.8	828	2.9	59.1	9.0	GTN04 L2	—	BN100LA4	M3LA4	13000	15000	24200	29200	8360
25.3	782	2.3	55.8	9.0	GTN03 L2	—	BN100LA4	M3LA4	12800	14800	23800	28700	8200
26.0	735	2.5	54.2	14.0	—	GTN03 R3	BN100LA4	M3LA4	12700	14600	23600	28400	8120
26.4	724	3.0	53.4	7.5	GTN03 L3	—	BN100LA4	M3LA4	12600	14500	23500	28300	8080
27.2	727	1.8	51.9	7.5	GTN01 L2	—	BN100LA4	M3LA4	4060	4060	11400	13100	2670
27.3	700	1.2	51.6	7.5	GTN00 L3	—	BN100LA4	M3LA4	4050	4050	11400	13100	2660
27.3	700	2.3	51.6	7.5	GTN01 L3	—	BN100LA4	M3LA4	4050	4050	11400	13100	2660
28.0	684	1.2	50.4	12.0	—	GTN00 R3	BN100LA4	M3LA4	4020	4020	11300	13000	2640
28.0	684	2.4	50.4	12.0	—	GTN01 R3	BN100LA4	M3LA4	4020	4020	11300	13000	2640
32	625	2.9	44.6	9.0	GTN03 L2	—	BN100LA4	M3LA4	11900	13700	22300	26800	7610
34	582	1.1	41.5	7.5	GTN00 L2	—	BN100LA4	M3LA4	3770	3770	10700	12300	2480
34	582	2.2	41.5	7.5	GTN01 L2	—	BN100LA4	M3LA4	3770	3770	10700	12300	2480
34	558	1.2	41.2	12.0	—	GTN00 R3	BN100LA4	M3LA4	3760	3760	10600	12200	2470
34	558	2.3	41.2	12.0	—	GTN01 R3	BN100LA4	M3LA4	3760	3760	10600	12200	2470
37	537	1.6	38.4	7.5	GTN00 L2	—	BN100LA4	M3LA4	3670	3670	10400	12000	2410
37	537	2.9	38.4	7.5	GTN01 L2	—	BN100LA4	M3LA4	3670	3670	10400	12000	2410
38	505	1.7	37.3	12.0	—	GTN00 R3	BN100LA4	M3LA4	3630	3630	10300	11900	2390
42	466	1.4	33.3	7.5	GTN00 L2	—	BN100LA4	M3LA4	3500	3500	9990	11500	2300
42	466	2.8	33.3	7.5	GTN01 L2	—	BN100LA4	M3LA4	3500	3500	9990	11500	2300
46	430	2.0	30.7	7.5	GTN00 L2	—	BN100LA4	M3LA4	3410	3410	9750	11200	2240
46	412	2.0	30.4	12.0	—	GTN00 R3	BN100LA4	M3LA4	3400	3400	9730	11200	2230
57	337	2.2	24.8	12.0	—	GTN00 R3	BN100LA4	M3LA4	3170	3170	9150	10500	2090
57	347	2.5	24.8	18.0	—	GTN03 R2	BN100LA4	M3LA4	9750	11300	18700	22500	6250
57	344	2.3	24.6	7.5	GTN00 L2	—	BN100LA4	M3LA4	3160	3160	9130	10500	2080
70	281	2.3	20.1	7.5	GTN00 L2	—	BN100LA4	M3LA4	2960	2960	8590	9870	1940
76	258	1.4	18.5	12.0	—	GTN00 R2	BN100LA4	M3LA4	2870	2870	8370	9620	1890
76	258	2.9	18.5	12.0	—	GTN01 R2	BN100LA4	M3LA4	2870	2870	8370	9620	1890
78	255	2.9	18.2	7.5	GTN00 L2	—	BN100LA4	M3LA4	2860	2860	8330	9580	1880
96	207	2.5	14.8	12.0	—	GTN00 R2	BN100LA4	M3LA4	2670	2670	7830	9000	1750
157	130	2.5	9.0	7.5	GTN00 L1	—	BN100LA4	M3LA4	2260	2260	6750	7750	1490

P_1 = 3 kW

n_2 min^{-1}	M_2 Nm	S	i	Pt kW					Rn_2 [N] LK	LS	HK/MK	HS/MS	LSH
0.64	38491	1.3	2187	11.0	GTN13 L4	—	BN100LB4	—	—	—	192000	231000	80000
0.67	36897	0.9	2096	11.0	GTN11 L4	—	BN100LB4	—	—	—	157000	195000	65000
0.78	31977	1.8	1817	11.0	GTN13 L4	—	BN100LB4	—	—	—	192000	231000	80000
0.80	31089	1.4	1766	11.0	GTN11 L4	—	BN100LB4	—	—	—	157000	195000	65000
0.84	29565	1.2	1680	11.0	GTN11 L4	—	BN100LB4	—	—	—	157000	195000	65000
0.94	26435	2.2	1502	11.0	GTN13 L4	—	BN100LB4	—	—	—	192000	231000	80000
0.98	25307	1.0	1438	11.0	GTN10 L4	—	BN100LB4	—	—	—	133000	166000	65000
1.0	24911	1.7	1415	11.0	GTN11 L4	—	BN100LB4	—	—	—	157000	195000	65000
1.0	24533	2.1	1394	11.0	GTN13 L4	—	BN100LB4	—	—	—	192000	229000	79900
1.1	22274	2.5	1266	11.0	GTN13 L4	—	BN100LB4	—	—	—	188000	222500	77400
1.1	22158	1.2	1259	11.0	GTN10 L4	—	BN100LB4	—	—	—	128500	161600	62700
1.1	21655	2.0	1230	11.0	GTN11 L4	—	BN100LB4	—	—	—	150800	187900	62300

A

P_1 = 3 kW

n_2 min^{-1}	M_2 Nm	S	i	Pt kW					Rn_2 [N] LK	LS	HK/MK	HS/MS	LSH
1.2	20491	1.4	1164	11.0	GTN10 L4	—	BN100LB4	—	—	—	125500	157900	61100
1.3	19658	2.7	1117	11.0	GTN13 L4	—	BN100LB4	—	—	—	181100	214300	74200
1.3	18628	2.3	1058	11.0	GTN11 L4	—	BN100LB4	—	—	—	144200	179600	59200
1.4	17963	1.6	1021	11.0	GTN10 L4	—	BN100LB4	—	—	—	120700	151800	58500
1.4	17584	1.0	999	7.5	GTN09 L4	—	BN100LB4	—	—	—	101200	130500	32200
1.4	17352	2.4	986	11.0	GTN11 L4	—	BN100LB4	—	—	—	141100	175800	57800
1.5	16524	2.0	939	11.0	GTN10 L4	—	BN100LB4	—	—	—	117700	148000	56900
1.6	15951	1.0	906	7.5	GTN07 L4	—	BN100LB4	M3LB4	43800	54900	94700	124200	38000
1.6	15951	1.1	906	7.5	GTN09 L4	—	BN100LB4	—	—	—	98300	126800	31100
1.6	15905	2.9	904	11.0	GTN11 L4	—	BN100LB4	—	—	—	137500	171300	56200
1.6	15807	1.5	898	15.0	—	GTN10 R4	BN100LB4	—	—	—	116100	146000	56100
1.7	14393	1.9	818	11.0	GTN10 L4	—	BN100LB4	—	—	—	112900	142000	54300
1.8	14090	0.9	801	7.5	GTN07 L4	—	BN100LB4	M3LB4	42000	52700	91300	119600	36500
1.8	14090	1.3	801	7.5	GTN09 L4	—	BN100LB4	—	—	—	94700	122100	29900
1.9	13319	2.0	757	15.0	—	GTN10 R4	BN100LB4	—	—	—	110300	138700	52900
1.9	13132	2.3	746	22.0	—	GTN11 R4	BN100LB4	—	—	—	129800	161700	52700
1.9	12773	2.1	726	11.0	GTN10 L4	—	BN100LB4	—	—	—	108900	137000	52200
2.0	12711	1.2	722	7.5	GTN07 L4	—	BN100LB4	M3LB4	41500	52100	90400	118400	36100
2.0	12711	1.7	722	7.5	GTN09 L4	—	BN100LB4	—	—	—	91800	118400	28900
2.0	12140	1.2	690	15.0	—	GTN09 R4	BN100LB4	—	—	—	90600	116800	28400
2.2	11502	1.1	654	7.5	GTN07 L4	—	BN100LB4	M3LB4	40200	50400	87700	114900	34900
2.2	11502	1.6	654	7.5	GTN09 L4	—	BN100LB4	—	—	—	89100	114900	27900
2.2	11240	1.9	639	15.0	—	GTN10 R4	BN100LB4	—	—	—	104800	131800	50000
2.2	11205	2.4	637	11.0	GTN10 L4	—	BN100LB4	—	—	—	104700	131700	50000
2.4	10378	2.1	590	15.0	—	GTN10 R4	BN100LB4	—	—	—	102400	128700	48700
2.4	10229	1.2	581	15.0	—	GTN07 R4	BN100LB4	M3LB4	38600	48500	84700	110900	33600
2.4	10229	1.5	581	15.0	—	GTN09 R4	BN100LB4	—	—	—	86000	110900	26900
2.4	10185	1.5	579	7.5	GTN07 L4	—	BN100LB4	M3LB4	38600	48400	84500	110800	33500
2.4	10185	2.1	579	7.5	GTN09 L4	—	BN100LB4	—	—	—	85900	110800	26800
2.7	9102	2.8	517	15.0	—	GTN10 R4	BN100LB4	—	—	—	98400	123800	46600
2.8	8963	1.1	509	6.0	GTN06 L4	—	BN100LB4	M3LB4	33300	37700	75600	88100	25000
2.8	8962	1.6	509	7.5	GTN07 L4	—	BN100LB4	M3LB4	37000	46400	81400	106600	32100
2.8	8962	1.6	509	7.5	GTN09 L4	—	BN100LB4	—	—	—	82700	106600	25700
2.8	8929	2.9	507	11.0	GTN10 L4	—	BN100LB4	—	—	—	97900	123000	46300
2.9	8633	1.1	490	15.0	—	GTN07 R4	BN100LB4	M3LB4	36500	45800	80500	105400	31700
2.9	8633	1.6	490	15.0	—	GTN09 R4	BN100LB4	—	—	—	81700	105400	25400
2.9	8590	1.1	488	12.0	—	GTN06 R4	BN100LB4	M3LB4	32800	37100	74700	87000	24600
3.0	8181	1.5	465	7.5	GTN07 L4	—	BN100LB4	M3LB4	35800	45000	79200	103700	31200
3.0	8181	2.2	465	7.5	GTN09 L4	—	BN100LB4	—	—	—	80400	103700	24900
3.1	8041	1.7	457	15.0	—	GTN09 R4	BN100LB4	—	—	—	80000	103200	24800
3.1	7993	2.5	454	15.0	—	GTN10 R4	BN100LB4	—	—	—	94700	119000	44700
3.1	7970	1.7	453	15.0	—	GTN07 R4	BN100LB4	M3LB4	35500	44600	78600	102900	30900
3.2	7819	1.3	444	6.0	GTN06 L4	—	BN100LB4	M3LB4	31800	36000	72600	84500	23900
3.4	7389	1.2	420	12.0	—	GTN06 R4	BN100LB4	M3LB4	31200	35300	71400	83100	23400
3.4	7274	1.6	413	15.0	—	GTN07 R4	BN100LB4	M3LB4	34500	43200	76400	100100	30000
3.4	7274	2.5	413	15.0	—	GTN09 R4	BN100LB4	—	—	—	77700	100100	24000
3.5	7137	1.7	406	7.5	GTN07 L4	—	BN100LB4	M3LB4	34300	43000	76000	99600	29800
3.5	7137	2.5	406	7.5	GTN09 L4	—	BN100LB4	—	—	—	77200	99600	23800
3.6	6893	2.8	392	11.0	GTN10 L4	—	BN100LB4	—	—	—	90500	113900	42500
3.6	6880	1.0	391	6.0	GTN06 L4	—	BN100LB4	M3LB4	30400	34500	69900	81400	22900
3.6	6845	1.1	389	12.0	—	GTN06 R4	BN100LB4	M3LB4	30400	34400	69800	81200	22800
3.8	6589	2.2	374	15.0	—	GTN09 R4	BN100LB4	—	—	—	75400	97200	23200
3.9	6387	1.9	363	15.0	—	GTN07 R4	BN100LB4	M3LB4	33000	41400	73500	96300	28700
4.0	6144	2.4	349	7.5	GTN07 L4	—	BN100LB4	M3LB4	32600	40900	72700	95200	28300
4.2	6124	1.4	336	11.0	GTN07 L3	—	BN100LB4	M3LB4	32200	40400	71900	94200	28000
4.2	6124	2.2	336	11.0	GTN09 L3	—	BN100LB4	—	—	—	73000	94200	22400
4.3	5828	2.0	331	15.0	—	GTN07 R4	BN100LB4	M3LB4	32000	40200	71500	93700	27800
4.3	5828	3.0	331	15.0	—	GTN09 R4	BN100LB4	—	—	—	72700	93700	22300
4.3	5906	0.9	325	7.5	GTN06 L3	—	BN100LB4	M3LB4	28600	32400	66100	76900	21500
4.5	5485	1.4	312	12.0	—	GTN06 R4	BN100LB4	M3LB4	28200	32000	65300	76000	21200
4.7	5280	2.7	300	15.0	—	GTN07 R4	BN100LB4	M3LB4	31000	38900	69400	91000	26900
4.9	5104	1.0	290	12.0	—	GTN05 R4	BN100LB4	M3LB4	22100	25600	39100	47000	14200
4.9	5086	1.6	289	12.0	—	GTN06 R4	BN100LB4	M3LB4	27500	31200	63800	74300	20700
4.9	5242	1.0	288	7.5	GTN06 L3	—	BN100LB4	M3LB4	27500	31200	63700	74200	20700
5.0	5007	2.3	284	15.0	—	GTN07 R4	BN100LB4	M3LB4	30400	38200	68300	89500	26500
5.0	5160	2.2	284	11.0	GTN07 L3	—	BN100LB4	M3LB4	30400	38100	68300	89400	26400
5.3	4883	1.1	268	7.5	GTN06 L3	—	BN100LB4	M3LB4	26900	30400	62400	72700	20200

P_1 = 3 kW

n_2 min^{-1}	M_2 Nm	S	i	Pt kW					Rn_2 [N] LK	LS	HK/MK	HS/MS	LSH
5.7	4375	1.9	249	12.0	—	GTN06 R4	BN100LB4	M3LB4	26200	29700	61000	71000	19700
5.9	4355	2.0	239	11.0	GTN07 L3	—	BN100LB4	M3LB4	28700	36000	64900	85000	25000
5.9	4355	3.0	239	11.0	GTN09 L3	—	BN100LB4	—	—	—	65900	85000	20000
5.9	4333	1.9	238	7.5	GTN06 L3	—	BN100LB4	M3LB4	25800	29200	60200	70100	19400
6.1	4087	2.7	232	15.0	—	GTN07 R4	BN100LB4	M3LB4	28400	35700	64300	84200	24700
6.1	4053	1.9	230	12.0	—	GTN06 R4	BN100LB4	M3LB4	25500	28900	59600	69400	19200
6.4	4036	1.6	222	7.5	GTN06 L3	—	BN100LB4	M3LB4	25200	28600	58900	68600	18900
6.4	4010	0.9	220	7.5	GTN04 L3	—	BN100LB4	M3LB4	19700	22800	35200	42400	12700
6.4	4010	1.2	220	7.5	GTN05 L3	—	BN100LB4	M3LB4	20200	23300	36000	43300	13000
6.6	3771	1.0	214	12.0	—	GTN04 R4	BN100LB4	M3LB4	20000	23100	35700	42900	12800
6.6	3771	1.4	214	12.0	—	GTN05 R4	BN100LB4	M3LB4	20000	23100	35700	42900	12800
6.6	3760	2.6	214	12.0	—	GTN06 R4	BN100LB4	M3LB4	24900	28200	58300	67900	18700
6.9	3727	2.2	205	7.5	GTN06 L3	—	BN100LB4	M3LB4	24500	27800	57600	67000	18400
7.0	3669	3.0	202	11.0	GTN07 L3	—	BN100LB4	M3LB4	27100	34000	61600	80700	23600
7.4	3464	1.0	190	7.5	GTN05 L3	—	BN100LB4	M3LB4	19200	22200	34400	41400	12300
7.4	3453	1.9	190	7.5	GTN06 L3	—	BN100LB4	M3LB4	23900	27100	56200	65500	18000
7.6	3254	1.1	185	12.0	—	GTN04 R4	BN100LB4	M3LB4	19100	22000	34100	41100	12200
7.6	3254	1.4	185	12.0	—	GTN05 R4	BN100LB4	M3LB4	19100	22000	34100	41100	12200
7.8	3185	3.0	181	12.0	—	GTN06 R4	BN100LB4	M3LB4	23600	26700	55500	64600	17700
7.9	3231	1.4	178	7.5	GTN05 L3	—	BN100LB4	M3LB4	18800	21700	33700	40600	12100
8.4	2953	2.6	168	12.0	—	GTN06 R4	BN100LB4	M3LB4	23000	26000	54200	63100	17300
8.6	2979	1.5	164	7.5	GTN05 L3	—	BN100LB4	M3LB4	18300	21100	32900	39600	11700
8.9	2787	1.0	158	12.0	—	GTN03 R4	BN100LB4	M3LB4	18100	20900	32600	39200	11600
8.9	2787	1.3	158	12.0	—	GTN04 R4	BN100LB4	M3LB4	18100	20900	32600	39200	11600
8.9	2787	1.9	158	12.0	—	GTN05 R4	BN100LB4	M3LB4	18100	20900	32600	39200	11600
9.2	2775	1.3	152	7.5	GTN05 L3	—	BN100LB4	M3LB4	17900	20600	32200	38700	11500
9.3	2767	2.7	152	7.5	GTN06 L3	—	BN100LB4	M3LB4	22200	25200	52600	61300	16700
9.4	2722	1.3	150	7.5	GTN04 L3	—	BN100LB4	M3LB4	17800	20500	32000	38500	11400
9.5	2608	1.3	148	12.0	—	GTN04 R4	BN100LB4	M3LB4	17700	20400	31900	38400	11400
9.5	2608	1.7	148	12.0	—	GTN05 R4	BN100LB4	M3LB4	17700	20400	31900	38400	11400
9.8	2623	2.1	144	14.0	—	GTN06 R3	BN100LB4	M3LB4	21800	24700	51800	60300	16400
10.0	2575	1.0	141	7.5	GTN03 L3	—	BN100LB4	M3LB4	17400	20100	31500	37900	11200
10.0	2575	1.4	141	7.5	GTN04 L3	—	BN100LB4	M3LB4	17400	20100	31500	37900	11200
10.0	2575	2.0	141	7.5	GTN05 L3	—	BN100LB4	M3LB4	17400	20100	31500	37900	11200
10.8	2374	1.5	130	7.5	GTN04 L3	—	BN100LB4	M3LB4	17000	19600	30700	37000	10900
10.9	2275	1.2	129	12.0	—	GTN03 R4	BN100LB4	M3LB4	16900	19500	30600	36900	10800
10.9	2275	1.6	129	12.0	—	GTN04 R4	BN100LB4	M3LB4	16900	19500	30600	36900	10800
10.9	2275	2.3	129	12.0	—	GTN05 R4	BN100LB4	M3LB4	16900	19500	30600	36900	10800
11.3	2265	1.6	124	7.5	GTN05 L3	—	BN100LB4	M3LB4	16700	19300	30300	36500	10700
11.6	2207	1.1	121	14.0	—	GTN04 R3	BN100LB4	M3LB4	16600	19100	30100	36200	10600
11.8	2169	3.0	119	14.0	—	GTN06 R3	BN100LB4	M3LB4	20500	23200	48900	57000	15400
12.3	2082	1.7	114	14.0	—	GTN05 R3	BN100LB4	M3LB4	16200	18700	29500	35500	10400
12.5	2051	1.8	113	7.5	GTN05 L3	—	BN100LB4	M3LB4	16200	18600	29400	35400	10400
12.8	2011	1.7	111	7.5	GTN04 L3	—	BN100LB4	M3LB4	16000	18500	29200	35200	10300
12.9	1927	1.7	109	12.0	—	GTN04 R4	BN100LB4	M3LB4	16000	18500	29200	35100	10300
13.3	1863	0.9	106	10.0	—	GTN01 R4	BN100LB4	M3LB4	5030	5030	13800	15900	3310
13.5	1902	1.4	105	7.5	GTN03 L3	—	BN100LB4	M3LB4	15800	18200	28800	34600	10100
13.5	1902	1.9	105	7.5	GTN04 L3	—	BN100LB4	M3LB4	15800	18200	28800	34600	10100
13.5	1902	2.6	105	7.5	GTN05 L3	—	BN100LB4	M3LB4	15800	18200	28800	34600	10100
14.5	1765	1.4	97.0	14.0	—	GTN04 R3	BN100LB4	M3LB4	15400	17700	28100	33800	9860
15.4	1666	1.1	91.5	14.0	—	GTN03 R3	BN100LB4	M3LB4	15100	17400	27600	33200	9670
15.4	1666	2.1	91.5	14.0	—	GTN05 R3	BN100LB4	M3LB4	15100	17400	27600	33200	9670
15.6	1642	1.4	90.2	7.5	GTN03 L3.	—	BN100LB4	M3LB4	15000	17300	27500	33100	9620
15.6	1642	2.0	90.2	7.5	GTN04 L3	—	BN100LB4	M3LB4	15000	17300	27500	33100	9620
15.6	1642	2.6	90.2	7.5	GTN05 L3	—	BN100LB4	M3LB4	15000	17300	27500	33100	9620
15.8	1573	2.1	89.4	12.0	—	GTN04 R4	BN100LB4	M3LB4	15000	17300	27400	33000	9590
16.5	1558	1.1	85.6	7.5	GTN01 L3	—	BN100LB4	M3LB4	4790	4790	13300	15200	3150
17.9	1433	1.5	78.7	14.0	—	GTN03 R3	BN100LB4	M3LB4	14300	16500	26400	31800	9190
17.9	1433	2.0	78.7	14.0	—	GTN04 R3	BN100LB4	M3LB4	14300	16500	26400	31800	9190
17.9	1432	1.1	78.7	12.0	—	GTN01 R3	BN100LB4	M3LB4	4660	4660	12900	14900	3060
18.2	1410	1.2	77.5	7.5	GTN01 L3	—	BN100LB4	M3LB4	4640	4640	12900	14800	3050
18.3	1406	1.8	77.2	7.5	GTN03 L3	—	BN100LB4	M3LB4	14200	16400	26300	31600	9140
18.3	1406	2.5	77.2	7.5	GTN04 L3	—	BN100LB4	M3LB4	14200	16400	26300	31600	9140
19.2	1335	1.4	73.3	14.0	—	GTN03 R3	BN100LB4	M3LB4	14000	16200	25900	31100	8980
19.2	1335	2.7	73.3	14.0	—	GTN05 R3	BN100LB4	M3LB4	14000	16200	25900	31100	8980
19.5	1315	2.5	72.3	7.5	GTN04 L3	—	BN100LB4	M3LB4	13900	16100	25700	31000	8940
19.5	1315	1.7	72.3	7.5	GTN03 L3	—	BN100LB4	M3LB4	13900	16100	25700	31000	8940

A

A

P_1 = 3 kW

n_2 min^{-1}	M_2 Nm	S	i	Pt kW					Rn_2 [N] LK	LS	HK/MK	HS/MS	LSH
20.2	1272	1.0	69.9	7.5	GTN01 L3	—	BN100LB4	M3LB4	4480	4480	12500	14300	2950
20.7	1242	1.0	68.2	12.0	—	GTN01 R3	BN100LB4	M3LB4	4440	4440	12400	14200	2920
21.8	1218	0.9	64.8	7.5	GTN01 L2	—	BN100LB4	M3LB4	4370	4370	12200	14000	2870
22.3	1151	1.4	63.2	7.5	GTN01 L3	—	BN100LB4	M3LB4	4330	4330	12100	13900	2850
22.4	1148	1.9	63.1	14.0	—	GTN03 R3	BN100LB4	M3LB4	13300	15400	24700	29700	8540
22.4	1148	2.5	63.1	14.0	—	GTN04 R3	BN100LB4	M3LB4	13300	15400	24700	29700	8540
22.4	1148	2.2	63.1	7.5	GTN03 L3	—	BN100LB4	M3LB4	13300	15400	24700	29700	8540
22.4	1145	1.4	62.9	12.0	—	GTN01 R3	BN100LB4	M3LB4	4330	4330	12100	13900	2840
23.8	1112	2.1	59.1	9.0	GTN04 L2	—	BN100LB4	M3LB4	13000	15000	24200	29200	8360
25.3	1049	1.7	55.8	9.0	GTN03 L2	—	BN100LB4	M3LB4	12800	14800	23800	28700	8200
26.0	986	1.8	54.2	14.0	—	GTN03 R3	BN100LB4	M3LB4	12700	14600	23600	28400	8120
26.4	972	2.2	53.4	7.5	GTN03 L3	—	BN100LB4	M3LB4	12600	14500	23500	28300	8080
27.2	976	1.3	51.9	7.5	GTN01 L2	—	BN100LB4	M3LB4	4060	4060	11400	13100	2670
27.3	940	0.9	51.6	7.5	GTN00 L3	—	BN100LB4	M3LB4	3960	3960	11200	12800	2600
27.3	940	1.7	51.6	7.5	GTN01 L3	—	BN100LB4	M3LB4	4050	4050	11400	13100	2660
28.0	918	0.9	50.4	12.0	—	GTN00 R3	BN100LB4	M3LB4	3930	3930	11100	12700	2580
28.0	918	1.8	50.4	12.0	—	GTN01 R3	BN100LB4	M3LB4	4020	4020	11300	13000	2640
28.1	915	2.6	50.3	14.0	—	GTN03 R3	BN100LB4	M3LB4	12300	14200	23100	27800	7920
29.8	890	2.7	47.3	9.0	GTN04 L2	—	BN100LB4	M3LB4	12100	14000	22700	27300	7760
30	848	2.5	46.6	14.0	—	GTN03 R3	BN100LB4	M3LB4	12000	13900	22600	27200	7720
32	839	2.2	44.6	9.0	GTN03 L2	—	BN100LB4	M3LB4	11900	13700	22300	26800	7610
33	775	2.7	42.6	14.0	—	GTN03 R3	BN100LB4	M3LB4	11700	13500	22000	26400	7490
34	781	1.7	41.5	7.5	GTN01 L2	—	BN100LB4	M3LB4	3770	3770	10700	12300	2480
34	749	1.7	41.2	12.0	—	GTN01 R3	BN100LB4	M3LB4	3760	3760	10600	12200	2470
37	722	3.0	38.4	9.0	GTN03 L2	—	BN100LB4	M3LB4	11300	13000	21300	25600	7240
37	721	1.2	38.4	7.5	GTN00 L2	—	BN100LB4	M3LB4	3670	3670	10400	12000	2410
37	721	2.1	38.4	7.5	GTN01 L2	—	BN100LB4	M3LB4	3670	3670	10400	12000	2410
38	678	1.2	37.3	12.0	—	GTN00 R3	BN100LB4	M3LB4	3630	3630	10300	11900	2390
38	678	2.4	37.3	12.0	—	GTN01 R3	BN100LB4	M3LB4	3630	3630	10300	11900	2390
39	672	2.7	35.8	9.0	GTN03 L2	—	BN100LB4	M3LB4	10800	12400	20400	24600	6910
42	626	1.0	33.3	7.5	GTN00 L2	—	BN100LB4	M3LB4	3420	3420	9790	11200	2250
42	626	2.1	33.3	7.5	GTN01 L2	—	BN100LB4	M3LB4	3420	3420	9790	11200	2250
46	577	1.5	30.7	7.5	GTN00 L2	—	BN100LB4	M3LB4	3330	3330	9550	11000	2190
46	577	2.7	30.7	7.5	GTN01 L2	—	BN100LB4	M3LB4	3410	3410	9750	11200	2240
46	554	1.5	30.4	12.0	—	GTN00 R3	BN100LB4	M3LB4	3400	3400	9730	11200	2230
46	554	2.9	30.4	12.0	—	GTN01 R3	BN100LB4	M3LB4	3400	3400	9730	11200	2230
57	452	1.6	24.8	12.0	—	GTN00 R3	BN100LB4	M3LB4	3170	3170	9150	10500	2090
57	466	1.8	24.8	18.0	—	GTN03 R2	BN100LB4	M3LB4	9750	11300	18700	22500	6250
57	462	1.7	24.6	7.5	GTN00 L2	—	BN100LB4	M3LB4	3160	3160	9130	10500	2080
70	377	1.7	20.1	7.5	GTN00 L2	—	BN100LB4	M3LB4	2960	2960	8590	9870	1940
76	347	1.1	18.5	12.0	—	GTN00 R2	BN100LB4	M3LB4	2870	2870	8370	9620	1890
76	347	2.1	18.5	12.0	—	GTN01 R2	BN100LB4	M3LB4	2870	2870	8370	9620	1890
78	342	2.2	18.2	7.5	GTN00 L2	—	BN100LB4	M3LB4	2860	2860	8330	9580	1880
95	279	2.6	14.8	7.5	GTN00 L2	—	BN100LB4	M3LB4	2670	2670	7840	9010	1760
96	277	1.8	14.8	12.0	—	GTN00 R2	BN100LB4	M3LB4	2670	2670	7830	9000	1750
116	228	3.0	12.1	7.5	GTN00 L2	—	BN100LB4	M3LB4	2500	2500	7380	8480	1640
119	222	2.7	11.8	12.0	—	GTN00 R2	BN100LB4	M3LB4	2480	2480	7330	8420	1630
157	175	1.8	9.0	7.5	GTN00 L1	—	BN100LB4	M3LB4	2260	2260	6750	7750	1490
196	140	2.9	7.2	7.5	GTN00 L1	—	BN100LB4	M3LB4	2100	2100	6310	7250	1380

P_1 = 4 kW

n_2 min^{-1}	M_2 Nm	S	i	Pt kW					Rn_2 [N] LK	LS	HK/MK	HS/MS	LSH
0.65	51963	0.9	2187	11.0	GTN13 L4	—	BN112M4	—	—	—	192000	231000	80000
0.79	43169	1.3	1817	11.0	GTN13 L4	—	BN112M4	—	—	—	192000	231000	80000
0.81	41970	1.0	1766	11.0	GTN11 L4	—	BN112M4	—	—	—	157000	195000	65000
0.95	35687	1.6	1502	11.0	GTN13 L4	—	BN112M4	—	—	—	192000	231000	80000
1.0	33630	1.3	1415	11.0	GTN11 L4	—	BN112M4	—	—	—	157000	195000	65000
1.0	33119	1.6	1394	11.0	GTN13 L4	—	BN112M4	—	—	—	192000	229000	79900
1.1	30069	1.9	1266	11.0	GTN13 L4	—	BN112M4	—	—	—	188000	222500	77400
1.1	29913	0.9	1259	11.0	GTN10 L4	—	BN112M4	—	—	—	128500	161600	62700
1.2	29234	1.5	1230	11.0	GTN11 L4	—	BN112M4	—	—	—	150800	187900	62300
1.2	27663	1.1	1164	11.0	GTN10 L4	—	BN112M4	—	—	—	125500	157900	61100

$P_1 = 4$ kW

n_2 min^{-1}	M_2 Nm	S	i	Pt kW					Rn_2 [N] LK	LS	HK/MK	HS/MS	LSH
1.3	26538	2.0	1117	11.0	GTN13 L4	—	BN112M4	—	—	—	181100	214300	74200
1.4	25148	1.7	1058	11.0	GTN11 L4	—	BN112M4	—	—	—	144200	179600	59200
1.4	24249	1.2	1021	11.0	GTN10 L4	—	BN112M4	—	—	—	120700	151800	58500
1.4	24094	2.3	1014	11.0	GTN13 L4	—	BN112M4	—	—	—	175900	208200	71800
1.5	23425	1.8	986	11.0	GTN11 L4	—	BN112M4	—	—	—	141100	175800	57800
1.5	22307	1.5	939	11.0	GTN10 L4	—	BN112M4	—	—	—	117700	148000	56900
1.6	21472	2.2	904	11.0	GTN11 L4	—	BN112M4	—	—	—	137500	171300	56200
1.6	21339	1.1	898	15.0	—	GTN10 R4	BN112M4	—	—	—	116100	146000	56100
1.6	21130	2.5	889	11.0	GTN13 L4	—	BN112M4	—	—	—	169100	200100	68800
1.7	19596	2.3	825	11.0	GTN11 L4	—	BN112M4	—	—	—	133800	166600	54500
1.7	19431	1.4	818	11.0	GTN10 L4	—	BN112M4	—	—	—	112900	142000	54300
1.8	19022	1.0	801	7.5	GTN09 L4	—	BN112M4	—	—	—	94700	122100	29900
1.8	18768	2.8	790	11.0	GTN13 L4	—	BN112M4	—	—	—	163200	193100	66100
1.8	18494	2.4	778	22.0	—	GTN13 R4	BN112M4	—	—	—	162500	192300	65800
1.9	17980	1.5	757	15.0	—	GTN10 R4	BN112M4	—	—	—	110300	138700	52900
1.9	17728	1.7	746	22.0	—	GTN11 R4	BN112M4	—	—	—	129800	161700	52700
2.0	17244	1.6	726	11.0	GTN10 L4	—	BN112M4	—	—	—	108900	137000	52200
2.0	17205	2.7	724	11.0	GTN11 L4	—	BN112M4	—	—	—	128700	160300	52200
2.0	17160	1.2	722	7.5	GTN09 L4	—	BN112M4	—	—	—	91800	118400	28900
2.1	16388	0.9	690	15.0	—	GTN09 R4	BN112M4	—	—	—	90600	116800	28400
2.2	15527	1.2	654	7.5	GTN09 L4	—	BN112M4	—	—	—	89100	114900	27900
2.2	15174	1.4	639	15.0	—	GTN10 R4	BN112M4	—	—	—	104800	131800	50000
2.2	15126	1.8	637	11.0	GTN10 L4	—	BN112M4	—	—	—	104700	131700	50000
2.3	14937	2.7	629	22.0	—	GTN11 R4	BN112M4	—	—	—	123300	153600	49800
2.3	14890	2.7	627	11.0	GTN11 L4	—	BN112M4	—	—	—	123200	153500	49700
2.4	14010	1.6	590	15.0	—	GTN10 R4	BN112M4	—	—	—	102400	128700	48700
2.5	13809	0.9	581	15.0	—	GTN07 R4	BN112M4	M3LC4	37700	47400	82900	108700	32800
2.5	13809	1.1	581	15.0	—	GTN09 R4	BN112M4	—	—	—	86000	110900	26900
2.5	13750	1.1	579	7.5	GTN07 L4	—	BN112M4	M3LC4	37700	47300	82800	108500	32800
2.5	13750	1.5	579	7.5	GTN09 L4	—	BN112M4	—	—	—	85900	110800	26800
2.6	13208	2.4	556	11.0	GTN10 L4	—	BN112M4	—	—	—	100600	126500	47800
2.8	12287	2.1	517	15.0	—	GTN10 R4	BN112M4	—	—	—	98400	123800	46600
2.8	12099	1.2	509	7.5	GTN07 L4	—	BN112M4	M3LC4	36100	45300	79700	104400	31400
2.8	12099	1.2	509	7.5	GTN09 L4	—	BN112M4	—	—	—	82700	106600	25700
2.8	12054	2.1	507	11.0	GTN10 L4	—	BN112M4	—	—	—	97900	123000	46300
2.9	11654	1.2	490	15.0	—	GTN09 R4	BN112M4	—	—	—	81700	105400	25400
2.9	11639	3.0	490	22.0	—	GTN11 R4	BN112M4	—	—	—	114400	142500	45800
3.1	11045	1.1	465	7.5	GTN07 L4	—	BN112M4	M3LC4	35800	45000	79200	103700	31200
3.1	11045	1.7	465	7.5	GTN09 L4	—	BN112M4	—	—	—	80400	103700	24900
3.1	10856	1.3	457	15.0	—	GTN09 R4	BN112M4	—	—	—	80000	103200	24800
3.1	10791	1.9	454	15.0	—	GTN10 R4	BN112M4	—	—	—	94700	119000	44700
3.2	10760	1.2	453	15.0	—	GTN07 R4	BN112M4	M3LC4	34700	43600	76900	100800	30200
3.2	10708	2.8	451	11.0	GTN10 L4	—	BN112M4	—	—	—	94400	118700	44500
3.2	10555	0.9	444	6.0	GTN06 L4	—	BN112M4	M3LC4	31100	35200	71100	82800	23300
3.4	9963	2.9	419	15.0	—	GTN10 R4	BN112M4	—	—	—	92400	116200	43500
3.5	9820	1.2	413	15.0	—	GTN07 R4	BN112M4	M3LC4	34500	43200	76400	100100	30000
3.5	9820	1.8	413	15.0	—	GTN09 R4	BN112M4	—	—	—	77700	100100	24000
3.5	9635	1.2	406	7.5	GTN07 L4	—	BN112M4	M3LC4	34300	43000	76000	99600	29800
3.5	9635	1.8	406	7.5	GTN09 L4	—	BN112M4	—	—	—	77200	99600	23800
3.7	9306	2.1	392	11.0	GTN10 L4	—	BN112M4	—	—	—	90500	113900	42500
3.8	8895	1.6	374	15.0	—	GTN09 R4	BN112M4	—	—	—	75400	97200	23200
3.9	8630	2.8	363	15.0	—	GTN10 R4	BN112M4	—	—	—	88500	111300	41500
3.9	8622	1.4	363	15.0	—	GTN07 R4	BN112M4	M3LC4	33000	41400	73500	96300	28700
4.1	8294	1.8	349	7.5	GTN07 L4	—	BN112M4	M3LC4	32600	40900	72700	95200	28300
4.1	8294	2.6	349	7.5	GTN09 L4	—	BN112M4	—	—	—	73800	95200	22700
4.3	8267	1.1	336	11.0	GTN07 L3	—	BN112M4	M3LC4	32200	40400	71900	94200	28000
4.3	8267	1.6	336	11.0	GTN09 L3	—	BN112M4	—	—	—	73000	94200	22400
4.3	7868	1.5	331	15.0	—	GTN07 R4	BN112M4	M3LC4	32000	40200	71500	93700	27800
4.3	7868	2.2	331	15.0	—	GTN09 R4	BN112M4	—	—	—	72700	93700	22300
4.6	7405	1.0	312	12.0	—	GTN06 R4	BN112M4	M3LC4	28200	32000	65300	76000	21200
4.8	7127	2.0	300	15.0	—	GTN07 R4	BN112M4	M3LC4	31000	38900	69400	91000	26900
4.9	6866	1.2	289	12.0	—	GTN06 R4	BN112M4	M3LC4	27500	31200	63800	74300	20700
5.0	6759	1.7	284	15.0	—	GTN07 R4	BN112M4	M3LC4	30400	38200	68300	89500	26500
5.0	6759	2.5	284	15.0	—	GTN09 R4	BN112M4	—	—	—	69400	89500	21200
5.0	6966	1.6	284	11.0	GTN07 L3	—	BN112M4	M3LC4	30400	38100	68300	89400	26400
5.0	6966	2.3	284	11.0	GTN09 L3	—	BN112M4	—	—	—	69400	89400	21100
5.5	6131	2.4	258	15.0	—	GTN07 R4	BN112M4	M3LC4	29500	37000	66400	87000	25600

A

A

P_1 = 4 kW

n_2 min^{-1}	M_2 Nm	S	i	Pt kW					Rn_2 [N] LK	LS	HK/MK	HS/MS	LSH
5.5	6131	2.8	258	15.0	—	GTN09 R4	BN112M4	—	—	—	67400	87000	20500
5.8	5906	1.4	249	12.0	—	GTN06 R4	BN112M4	M3LC4	26200	29700	61000	71000	19700
6.0	5879	1.5	239	11.0	GTN07 L3	—	BN112M4	M3LC4	28700	36000	64900	85000	25000
6.0	5879	2.2	239	11.0	GTN09 L3	—	BN112M4	—	—	—	65900	85000	20000
6.0	5850	1.4	238	7.5	GTN06 L3	—	BN112M4	M3LC4	25800	29200	60200	70100	19400
6.2	5517	2.0	232	15.0	—	GTN07 R4	BN112M4	M3LC4	28400	35700	64300	84200	24700
6.2	5472	1.4	230	12.0	—	GTN06 R4	BN112M4	M3LC4	25500	28900	59600	69400	19200
6.4	5476	2.4	223	11.0	GTN09 L3	—	BN112M4	—	—	—	64500	83200	19500
6.4	5449	1.2	222	7.5	GTN06 L3	—	BN112M4	M3LC4	25200	28600	58900	68600	18900
6.5	5428	2.3	221	11.0	GTN07 L3	—	BN112M4	M3LC4	28000	35100	63300	83000	24300
6.7	5091	1.1	214	12.0	—	GTN05 R4	BN112M4	M3LC4	20000	23100	35700	42900	12800
6.7	5076	1.9	214	12.0	—	GTN06 R4	BN112M4	M3LC4	24900	28200	58300	67900	18700
7.0	4886	2.9	206	15.0	—	GTN07 R4	BN112M4	M3LC4	27300	34300	62000	81200	23700
7.0	5032	1.6	205	7.5	GTN06 L3	—	BN112M4	M3LC4	24500	27800	57600	67000	18400
7.1	4953	2.2	202	11.0	GTN07 L3	—	BN112M4	M3LC4	27100	34000	61600	80700	23600
7.5	4661	1.4	190	7.5	GTN06 L3	—	BN112M4	M3LC4	23900	27100	56200	65500	18000
7.7	4394	1.0	185	12.0	—	GTN05 R4	BN112M4	M3LC4	19100	22000	34100	41100	12200
7.9	4299	2.2	181	12.0	—	GTN06 R4	BN112M4	M3LC4	23600	26700	55500	64600	17700
8.1	4362	1.0	178	7.5	GTN05 L3	—	BN112M4	M3LC4	18800	21700	33700	40600	12100
8.1	4349	2.8	177	11.0	GTN07 L3	—	BN112M4	M3LC4	26000	32600	59300	77700	22600
8.5	3987	1.9	168	12.0	—	GTN06 R4	BN112M4	M3LC4	23000	26000	54200	63100	17300
8.7	4022	1.1	164	7.5	GTN05 L3	—	BN112M4	M3LC4	18300	21100	32900	39600	11700
8.9	3969	2.7	162	11.0	GTN07 L3	—	BN112M4	M3LC4	25200	31600	57700	75600	21900
9.0	3762	0.9	158	12.0	—	GTN04 R4	BN112M4	M3LC4	18100	20900	32600	39200	11600
9.0	3762	1.4	158	12.0	—	GTN05 R4	BN112M4	M3LC4	18100	20900	32600	39200	11600
9.1	3751	2.6	158	12.0	—	GTN06 R4	BN112M4	M3LC4	22500	25500	53200	62000	16900
9.4	3747	1.0	152	7.5	GTN05 L3	—	BN112M4	M3LC4	17900	20600	32200	38700	11500
9.4	3735	2.0	152	7.5	GTN06 L3	—	BN112M4	M3LC4	22200	25200	52600	61300	16700
9.6	3674	0.9	150	7.5	GTN04 L3	—	BN112M4	M3LC4	17800	20500	32000	38500	11400
9.7	3520	1.0	148	12.0	—	GTN04 R4	BN112M4	M3LC4	17700	20400	31900	38400	11400
9.7	3520	1.3	148	12.0	—	GTN05 R4	BN112M4	M3LC4	17700	20400	31900	38400	11400
9.9	3542	1.6	144	14.0	—	GTN06 R3	BN112M4	M3LC4	21800	24700	51800	60300	16400
10.1	3476	1.0	141	7.5	GTN04 L3	—	BN112M4	M3LC4	17400	20100	31500	37900	11200
10.1	3476	1.5	141	7.5	GTN05 L3	—	BN112M4	M3LC4	17400	20100	31500	37900	11200
10.1	3464	2.3	141	7.5	GTN06 L3	—	BN112M4	M3LC4	21700	24600	51500	59900	16300
11.0	3205	1.1	130	7.5	GTN04 L3	—	BN112M4	M3LC4	17000	19600	30700	37000	10900
11.1	3071	1.1	129	12.0	—	GTN04 R4	BN112M4	M3LC4	16900	19500	30600	36900	10800
11.1	3071	1.7	129	12.0	—	GTN05 R4	BN112M4	M3LC4	16900	19500	30600	36900	10800
11.5	3058	1.2	124	7.5	GTN05 L3	—	BN112M4	M3LC4	16700	19300	30300	36500	10700
11.8	2979	2.6	121	7.5	GTN06 L3	—	BN112M4	M3LC4	20600	23400	49200	57300	15500
11.9	2942	2.9	120	22.0	—	GTN07 R3	BN112M4	M3LC4	22800	28600	52700	69100	19800
12.0	2928	2.2	119	14.0	—	GTN06 R3	BN112M4	M3LC4	20500	23200	48900	57000	15400
12.5	2811	1.3	114	14.0	—	GTN05 R3	BN112M4	M3LC4	16200	18700	29500	35500	10400
12.7	2769	1.3	113	7.5	GTN05 L3	—	BN112M4	M3LC4	16200	18600	29400	35400	10400
12.7	2760	2.7	112	7.5	GTN06 L3	—	BN112M4	M3LC4	20100	22800	48100	56000	15100
12.9	2715	1.2	111	7.5	GTN04 L3	—	BN112M4	M3LC4	16000	18500	29200	35200	10300
13.1	2601	1.3	109	12.0	—	GTN04 R4	BN112M4	M3LC4	16000	18500	29200	35100	10300
13.7	2568	1.0	105	7.5	GTN03 L3	—	BN112M4	M3LC4	15800	18200	28800	34600	10100
13.7	2568	1.4	105	7.5	GTN04 L3	—	BN112M4	M3LC4	15800	18200	28800	34600	10100
13.7	2568	2.0	105	7.5	GTN05 L3	—	BN112M4	M3LC4	15800	18200	28800	34600	10100
14.5	2420	2.7	98.5	14.0	—	GTN06 R3	BN112M4	M3LC4	19200	21800	46200	53800	14400
14.7	2383	1.0	97.0	14.0	—	GTN04 R3	BN112M4	M3LC4	15400	17700	28100	33800	9860
15.6	2248	1.6	91.5	14.0	—	GTN05 R3	BN112M4	M3LC4	15100	17400	27600	33200	9670
15.9	2216	1.0	90.2	7.5	GTN03 L3	—	BN112M4	M3LC4	15000	17300	27500	33100	9620
15.9	2216	1.5	90.2	7.5	GTN04 L3	—	BN112M4	M3LC4	15000	17300	27500	33100	9620
15.9	2216	1.9	90.2	7.5	GTN05 L3	—	BN112M4	M3LC4	15000	17300	27500	33100	9620
16.0	2124	1.6	89.4	12.0	—	GTN04 R4	BN112M4	M3LC4	15000	17300	27400	33000	9590
18.2	1934	1.1	78.7	14.0	—	GTN03 R3	BN112M4	M3LC4	14300	16500	26400	31800	9190
18.2	1934	1.5	78.7	14.0	—	GTN04 R3	BN112M4	M3LC4	14300	16500	26400	31800	9190
18.2	1934	2.2	78.7	14.0	—	GTN05 R3	BN112M4	M3LC4	14300	16500	26400	31800	9190
18.5	1898	1.3	77.2	7.5	GTN03 L3	—	BN112M4	M3LC4	14200	16400	26300	31600	9140
18.5	1898	1.8	77.2	7.5	GTN04 L3	—	BN112M4	M3LC4	14200	16400	26300	31600	9140
18.5	1898	2.5	77.2	7.5	GTN05 L3	—	BN112M4	M3LC4	14200	16400	26300	31600	9140
19.5	1802	1.0	73.3	14.0	—	GTN03 R3	BN112M4	M3LC4	14000	16200	25900	31100	8980
19.5	1802	2.0	73.3	14.0	—	GTN05 R3	BN112M4	M3LC4	14000	16200	25900	31100	8980
19.8	1776	1.9	72.3	7.5	GTN04 L3	—	BN112M4	M3LC4	13900	16100	25700	31000	8940
19.8	1776	1.3	72.3	7.5	GTN03 L3	—	BN112M4	M3LC4	13900	16100	25700	31000	8940

$P_1 = 4$ kW

n_2 min^{-1}	M_2 Nm	S	i	Pt kW					Rn_2 [N] LK	LS	HK/MK	HS/MS	LSH
19.8	1776	2.3	72.3	7.5	**GTN05 L3**	—	**BN112M4**	**M3LC4**	13900	16100	25700	31000	8940
22.6	1554	1.1	63.2	7.5	**GTN01 L3**	—	**BN112M4**	**M3LC4**	4330	4330	12100	13900	2850
22.7	1550	1.4	63.1	14.0	—	**GTN03 R3**	**BN112M4**	**M3LC4**	13300	15400	24700	29700	8540
22.7	1550	1.8	63.1	14.0	—	**GTN04 R3**	**BN112M4**	**M3LC4**	13300	15400	24700	29700	8540
22.7	1550	2.8	63.1	14.0	—	**GTN05 R3**	**BN112M4**	**M3LC4**	13300	15400	24700	29700	8540
22.7	1549	1.6	63.1	7.5	**GTN03 L3**	—	**BN112M4**	**M3LC4**	13300	15400	24700	29700	8540
22.7	1549	2.2	63.1	7.5	**GTN04 L3**	—	**BN112M4**	**M3LC4**	13300	15400	24700	29700	8540
22.7	1546	1.1	62.9	12.0	—	**GTN01 R3**	**BN112M4**	**M3LC4**	4330	4330	12100	13900	2840
24.2	1501	1.6	59.1	9.0	**GTN04 L2**	—	**BN112M4**	**M3LC4**	13000	15000	24200	29200	8360
25.6	1416	1.3	55.8	9.0	**GTN03 L2**	—	**BN112M4**	**M3LC4**	12800	14800	23800	28700	8200
25.6	1416	2.5	55.8	9.0	**GTN05 L2**	—	**BN112M4**	**M3LC4**	12800	14800	23800	28700	8200
26.4	1331	1.4	54.2	14.0	—	**GTN03 R3**	**BN112M4**	**M3LC4**	12700	14600	23600	28400	8120
26.4	1331	2.7	54.2	14.0	—	**GTN05 R3**	**BN112M4**	**M3LC4**	12700	14600	23600	28400	8120
26.8	1312	1.7	53.4	7.5	**GTN03 L3**	—	**BN112M4**	**M3LC4**	12600	14500	23500	28300	8080
26.8	1312	2.5	53.4	7.5	**GTN04 L3**	—	**BN112M4**	**M3LC4**	12600	14500	23500	28300	8080
27.5	1318	1.0	51.9	7.5	**GTN01 L2**	—	**BN112M4**	**M3LC4**	4060	4060	11400	13100	2670
27.7	1269	1.3	51.6	7.5	**GTN01 L3**	—	**BN112M4**	**M3LC4**	4050	4050	11400	13100	2660
28.4	1239	1.3	50.4	12.0	—	**GTN01 R3**	**BN112M4**	**M3LC4**	4020	4020	11300	13000	2640
28.4	1235	1.9	50.3	14.0	—	**GTN03 R3**	**BN112M4**	**M3LC4**	12300	14200	23100	27800	7920
28.4	1235	2.8	50.3	14.0	—	**GTN04 R3**	**BN112M4**	**M3LC4**	12300	14200	23100	27800	7920
30	1201	2.0	47.3	9.0	**GTN04 L2**	—	**BN112M4**	**M3LC4**	12100	14000	22700	27300	7760
31	1145	1.9	46.6	14.0	—	**GTN03 R3**	**BN112M4**	**M3LC4**	12000	13900	22600	27200	7720
31	1145	2.5	46.6	14.0	—	**GTN04 R3**	**BN112M4**	**M3LC4**	12000	13900	22600	27200	7720
32	1133	1.6	44.6	9.0	**GTN03 L2**	—	**BN112M4**	**M3LC4**	11900	13700	22300	26800	7610
33	1071	3.0	43.6	7.5	**GTN04 L3**	—	**BN112M4**	**M3LC4**	11800	13600	22100	26600	7550
34	1046	2.0	42.6	14.0	—	**GTN03 R3**	**BN112M4**	**M3LC4**	11700	13500	22000	26400	7490
34	1054	1.2	41.5	7.5	**GTN01 L2**	—	**BN112M4**	**M3LC4**	3770	3770	10700	12300	2480
35	1011	1.3	41.2	12.0	—	**GTN01 R3**	**BN112M4**	**M3LC4**	3760	3760	10600	12200	2470
37	975	2.2	38.4	9.0	**GTN03 L2**	—	**BN112M4**	**M3LC4**	11300	13000	21300	25600	7240
37	975	2.9	38.4	9.0	**GTN04 L2**	—	**BN112M4**	**M3LC4**	11300	13000	21300	25600	7240
37	974	1.6	38.4	7.5	**GTN01 L2**	—	**BN112M4**	**M3LC4**	3670	3670	10400	12000	2410
38	915	0.9	37.3	12.0	—	**GTN00 R3**	**BN112M4**	**M3LC4**	3550	3550	10100	11600	2330
38	915	1.7	37.3	12.0	—	**GTN01 R3**	**BN112M4**	**M3LC4**	3630	3630	10300	11900	2390
39	913	2.6	37.1	14.0	—	**GTN03 R3**	**BN112M4**	**M3LC4**	11200	12900	21100	25400	7160
40	908	2.0	35.8	9.0	**GTN03 L2**	—	**BN112M4**	**M3LC4**	11000	12700	20800	25100	7070
43	845	1.5	33.3	7.5	**GTN01 L2**	—	**BN112M4**	**M3LC4**	3500	3500	9990	11500	2300
45	773	2.7	31.5	14.0	—	**GTN03 R3**	**BN112M4**	**M3LC4**	10600	12200	20100	24100	6770
46	781	2.7	30.8	9.0	**GTN03 L2**	—	**BN112M4**	**M3LC4**	10500	12100	19900	24000	6720
47	779	1.1	30.7	7.5	**GTN00 L2**	—	**BN112M4**	**M3LC4**	3410	3410	9750	11200	2240
47	779	2.0	30.7	7.5	**GTN01 L2**	—	**BN112M4**	**M3LC4**	3410	3410	9750	11200	2240
47	747	1.1	30.4	12.0	—	**GTN00 R3**	**BN112M4**	**M3LC4**	3400	3400	9730	11200	2230
47	747	2.1	30.4	12.0	—	**GTN01 R3**	**BN112M4**	**M3LC4**	3400	3400	9730	11200	2230
54	671	2.7	26.4	9.0	**GTN03 L2**	—	**BN112M4**	**M3LC4**	9960	11500	19000	22900	6390
58	610	1.2	24.8	12.0	—	**GTN00 R3**	**BN112M4**	**M3LC4**	3170	3170	9150	10500	2090
58	610	2.3	24.8	12.0	—	**GTN01 R3**	**BN112M4**	**M3LC4**	3170	3170	9150	10500	2090
58	629	1.4	24.8	18.0	—	**GTN03 R2**	**BN112M4**	**M3LC4**	9750	11300	18700	22500	6250
58	624	1.3	24.6	7.5	**GTN00 L2**	—	**BN112M4**	**M3LC4**	3160	3160	9130	10500	2080
58	624	2.4	24.6	7.5	**GTN01 L2**	—	**BN112M4**	**M3LC4**	3160	3160	9130	10500	2080
71	510	1.3	20.1	7.5	**GTN00 L2**	—	**BN112M4**	**M3LC4**	2960	2960	8590	9870	1940
71	510	2.5	20.1	7.5	**GTN01 L2**	—	**BN112M4**	**M3LC4**	2960	2960	8590	9870	1940
78	468	1.6	18.5	12.0	—	**GTN01 R2**	**BN112M4**	**M3LC4**	2870	2870	8370	9620	1890
79	461	1.6	18.2	7.5	**GTN00 L2**	—	**BN112M4**	**M3LC4**	2860	2860	8330	9580	1880
79	461	2.9	18.2	7.5	**GTN01 L2**	—	**BN112M4**	**M3LC4**	2860	2860	8330	9580	1880
96	377	1.9	14.8	7.5	**GTN00 L2**	—	**BN112M4**	**M3LC4**	2670	2670	7840	9010	1760
97	375	1.4	14.8	12.0	—	**GTN00 R2**	**BN112M4**	**M3LC4**	2670	2670	7830	9000	1750
97	375	2.5	14.8	12.0	—	**GTN01 R2**	**BN112M4**	**M3LC4**	2670	2670	7830	9000	1750
118	307	2.2	12.1	7.5	**GTN00 L2**	—	**BN112M4**	**M3LC4**	2500	2500	7380	8480	1640
121	300	2.0	11.8	12.0	—	**GTN00 R2**	**BN112M4**	**M3LC4**	2480	2480	7330	8420	1630
159	236	1.4	9.00	7.5	**GTN00 L1**	—	**BN112M4**	**M3LC4**	2260	2260	6750	7750	1490
159	236	2.7	9.00	7.5	**GTN01 L1**	—	**BN112M4**	**M3LC4**	2260	2260	6750	7750	1490
164	222	2.8	8.74	12.0	—	**GTN00 R2**	**BN112M4**	**M3LC4**	2240	2240	6690	7690	1470
199	189	2.2	7.20	7.5	**GTN00 L1**	—	**BN112M4**	**M3LC4**	2100	2100	6310	7250	1380

A

A

P_1 = 5.5 kW

n_2 min^{-1}	M_2 Nm	S	i	Pt kW					Rn_2 [N] LK	LS	HK/MK	HS/MS	LSH
0.76	59957	2.6	1893	18.0	GTN17 L4	—	BN132S4	—	—	—	442000	470000	150000
0.79	57559	1.0	1817	11.0	GTN13 L4	—	BN132S4	—	—	—	192000	231000	80000
0.80	57190	1.5	1805	18.0	GTN15 L4	—	BN132S4	—	—	—	206000	243000	90000
0.80	56908	1.2	1796	15.0	GTN14 L4	—	BN132S4	—	—	—	206000	243000	90000
0.96	47582	1.2	1502	11.0	GTN13 L4	—	BN132S4	—	—	—	192000	231000	80000
0.96	47277	1.8	1492	18.0	GTN15 L4	—	BN132S4	—	—	—	206000	243000	90000
0.97	47044	1.4	1485	15.0	GTN14 L4	—	BN132S4	—	—	—	206000	243000	90000
1.0	44840	1.0	1415	11.0	GTN11 L4	—	BN132S4	—	—	—	157000	195000	65000
1.0	44159	1.2	1394	11.0	GTN13 L4	—	BN132S4	—	—	—	192000	229000	79900
1.1	40669	2.4	1284	18.0	GTN15 L4	—	BN132S4	—	—	—	201500	236600	87400
1.1	40468	1.9	1277	15.0	GTN14 L4	—	BN132S4	—	—	—	201200	236300	87300
1.1	40092	1.4	1266	11.0	GTN13 L4	—	BN132S4	—	—	—	188000	222500	77400
1.2	38979	1.1	1230	11.0	GTN11 L4	—	BN132S4	—	—	—	150800	187900	62300
1.3	35384	1.5	1117	11.0	GTN13 L4	—	BN132S4	—	—	—	181100	214300	74200
1.3	34984	2.7	1104	18.0	GTN15 L4	—	BN132S4	—	—	—	192600	226200	83200
1.3	34811	2.2	1099	15.0	GTN14 L4	—	BN132S4	—	—	—	192400	225800	83000
1.4	33530	1.3	1058	11.0	GTN11 L4	—	BN132S4	—	—	—	144200	179600	59200
1.4	32869	2.5	1038	15.0	GTN14 L4	—	BN132S4	—	—	—	189100	222000	81400
1.4	32125	1.7	1014	11.0	GTN13 L4	—	BN132S4	—	—	—	175900	208200	71800
1.5	31233	1.4	986	11.0	GTN11 L4	—	BN132S4	—	—	—	141100	175800	57800
1.5	29743	1.1	939	11.0	GTN10 L4	—	BN132S4	—	—	—	115300	145000	55600
1.6	29331	2.5	926	15.0	GTN14 L4	—	BN132S4	—	—	—	182700	214500	78400
1.6	28807	2.7	909	40.0	—	GTN15 R4	BN132S4	—	—	—	181700	213400	77900
1.6	28630	1.6	904	11.0	GTN11 L4	—	BN132S4	—	—	—	137500	171300	56200
1.6	28174	1.9	889	11.0	GTN13 L4	—	BN132S4	—	—	—	169100	200100	68800
1.7	27172	3.0	858	15.0	GTN14 L4	—	BN132S4	—	—	—	178600	209700	76400
1.7	26127	1.7	825	11.0	GTN11 L4	—	BN132S4	—	—	—	133800	166600	54500
1.8	25908	1.1	818	11.0	GTN10 L4	—	BN132S4	—	—	—	112900	142000	54300
1.8	25024	2.1	790	11.0	GTN13 L4	—	BN132S4	—	—	—	163200	193100	66100
1.9	24658	1.8	778	22.0	—	GTN13 R4	BN132S4	—	—	—	162500	192300	65800
1.9	23973	1.1	757	15.0	—	GTN10 R4	BN132S4	—	—	—	110300	138700	52900
1.9	23637	1.3	746	22.0	—	GTN11 R4	BN132S4	—	—	—	129800	161700	52700
2.0	22992	1.2	726	11.0	GTN10 L4	—	BN132S4	—	—	—	108900	137000	52200
2.0	22941	2.0	724	11.0	GTN11 L4	—	BN132S4	—	—	—	128700	160300	52200
2.0	22879	0.9	722	7.5	GTN09 L4	—	BN132S4	—	—	—	89900	116000	28200
2.1	22021	2.3	695	11.0	GTN13 L4	—	BN132S4	—	—	—	157000	185900	63300
2.2	20485	2.5	647	22.0	—	GTN13 R4	BN132S4	—	—	—	153700	181900	61800
2.3	20233	1.1	639	15.0	—	GTN10 R4	BN132S4	—	—	—	104800	131800	50000
2.3	20168	1.3	637	11.0	GTN10 L4	—	BN132S4	—	—	—	104700	131700	50000
2.3	20051	2.6	633	11.0	GTN13 L4	—	BN132S4	—	—	—	152700	180700	61400
2.3	19916	2.0	629	22.0	—	GTN11 R4	BN132S4	—	—	—	123300	153600	49800
2.3	19853	2.0	627	11.0	GTN11 L4	—	BN132S4	—	—	—	123200	153500	49700
2.3	19443	3.0	614	22.0	—	GTN14 R4	BN132S4	—	—	—	161500	189600	68400
2.4	18681	1.2	590	15.0	—	GTN10 R4	BN132S4	—	—	—	102400	128700	48700
2.5	18333	1.2	579	7.5	GTN09 L4	—	BN132S4	—	—	—	85900	110800	26800
2.5	17984	2.4	568	11.0	GTN11 L4	—	BN132S4	—	—	—	119600	149000	48100
2.6	17611	1.8	556	11.0	GTN10 L4	—	BN132S4	—	—	—	100600	126500	47800
2.7	16935	2.9	535	22.0	—	GTN13 R4	BN132S4	—	—	—	145100	171800	58000
2.8	16464	2.3	520	22.0	—	GTN11 R4	BN132S4	—	—	—	116500	145100	46700
2.8	16383	1.6	517	15.0	—	GTN10 R4	BN132S4	—	—	—	98400	123800	46600
2.8	16273	3.0	514	11.0	GTN13 L4	—	BN132S4	—	—	—	143400	169700	57300
2.8	16224	2.7	512	11.0	GTN11 L4	—	BN132S4	—	—	—	116000	144500	46500
2.8	16072	1.6	507	11.0	GTN10 L4	—	BN132S4	—	—	—	97900	123000	46300
2.9	15539	0.9	490	15.0	—	GTN09 R4	BN132S4	—	—	—	80100	103300	24800
2.9	15519	2.2	490	22.0	—	GTN11 R4	BN132S4	—	—	—	114400	142500	45800
3.1	14726	1.2	465	7.5	GTN09 L4	—	BN132S4	—	—	—	80400	103700	24900
3.2	14474	1.0	457	15.0	—	GTN09 R4	BN132S4	—	—	—	80000	103200	24800
3.2	14388	1.4	454	15.0	—	GTN10 R4	BN132S4	—	—	—	94700	119000	44700
3.2	14347	0.9	453	15.0	—	GTN07 R4	BN132S4	M4SA4	35500	44600	78600	102900	30900
3.2	14277	2.1	451	11.0	GTN10 L4	—	BN132S4	—	—	—	94400	118700	44500
3.3	13873	2.7	438	22.0	—	GTN11 R4	BN132S4	—	—	—	110600	137800	44100
3.4	13284	2.2	419	15.0	—	GTN10 R4	BN132S4	—	—	—	92400	116200	43500
3.5	13093	0.9	413	15.0	—	GTN07 R4	BN132S4	M4SA4	33700	42300	74900	98100	29300
3.5	13093	1.4	413	15.0	—	GTN09 R4	BN132S4	—	—	—	77700	100100	24000
3.6	12847	0.9	406	7.5	GTN07 L4	—	BN132S4	M4SA4	33500	42000	74400	97500	29100
3.6	12847	1.4	406	7.5	GTN09 L4	—	BN132S4	—	—	—	77200	99600	23800
3.7	12407	1.6	392	11.0	GTN10 L4	—	BN132S4	—	—	—	90500	113900	42500

P_1 = 5.5 kW

n_2 min^{-1}	M_2 Nm	S	i	Pt kW					Rn_2 [N] LK	LS	HK/MK	HS/MS	LSH
3.8	11860	1.2	374	15.0	—	GTN09 R4	BN132S4	—	—	—	75400	97200	23200
4.0	11507	2.1	363	15.0	—	GTN10 R4	BN132S4	—	—	—	88500	111300	41500
4.0	11496	1.1	363	15.0	—	GTN07 R4	BN132S4	M4SA4	33000	41400	73500	96300	28700
4.1	11482	1.7	350	18.0	GTN10 L3	—	BN132S4	—	—	—	87600	110100	41000
4.1	11058	1.3	349	7.5	GTN07 L4	—	BN132S4	M4SA4	32600	40900	72700	95200	28300
4.1	11058	1.9	349	7.5	GTN09 L4	—	BN132S4	—	—	—	73800	95200	22700
4.3	11022	1.2	336	11.0	GTN09 L3	—	BN132S4	—	—	—	73000	94200	22400
4.3	10586	2.6	334	15.0	—	GTN10 R4	BN132S4	—	—	—	86300	108600	40300
4.3	10491	1.1	331	15.0	—	GTN07 R4	BN132S4	M4SA4	32000	40200	71500	93700	27800
4.3	10491	1.6	331	15.0	—	GTN09 R4	BN132S4	—	—	—	72700	93700	22300
4.7	9660	2.4	305	15.0	—	GTN10 R4	BN132S4	—	—	—	84000	105600	39100
4.8	9503	1.5	300	15.0	—	GTN07 R4	BN132S4	M4SA4	31000	38900	69400	91000	26900
4.9	9674	2.4	295	18.0	GTN10 L3	—	BN132S4	—	—	—	83200	104600	38700
4.9	9539	2.8	291	18.0	GTN11 L3	—	BN132S4	—	—	—	97900	121900	38500
5.0	9155	0.9	289	12.0	—	GTN06 R4	BN132S4	M4SA4	26900	30500	62500	72800	20200
5.1	9012	1.3	284	15.0	—	GTN07 R4	BN132S4	M4SA4	30400	38200	68300	89500	26500
5.1	9012	1.9	284	15.0	—	GTN09 R4	BN132S4	—	—	—	69400	89500	21200
5.1	9287	1.2	284	11.0	GTN07 L3	—	BN132S4	M4SA4	30400	38100	68300	89400	26400
5.1	9287	1.7	284	11.0	GTN09 L3	—	BN132S4	—	—	—	69400	89400	21100
5.1	8967	2.9	283	15.0	—	GTN10 R4	BN132S4	—	—	—	82100	103300	38100
5.6	8183	2.8	258	15.0	—	GTN10 R4	BN132S4	—	—	—	79900	100500	37000
5.6	8175	1.8	258	15.0	—	GTN07 R4	BN132S4	M4SA4	29500	37000	66400	87000	25600
5.6	8175	2.1	258	15.0	—	GTN09 R4	BN132S4	—	—	—	67400	87000	20500
5.8	8165	2.3	249	18.0	GTN10 L3	—	BN132S4	—	—	—	79100	99400	36600
5.8	7875	1.0	249	12.0	—	GTN06 R4	BN132S4	M4SA4	26200	29700	61000	71000	19700
6.0	7838	1.1	239	11.0	GTN07 L3	—	BN132S4	M4SA4	28700	36000	64900	85000	25000
6.0	7838	1.7	239	11.0	GTN09 L3	—	BN132S4	—	—	—	65900	85000	20000
6.0	7800	1.0	238	7.5	GTN06 L3	—	BN132S4	M4SA4	25800	29200	60200	70100	19400
6.2	7356	1.5	232	15.0	—	GTN07 R4	BN132S4	M4SA4	28400	35700	64300	84200	24700
6.2	7356	2.3	232	15.0	—	GTN09 R4	BN132S4	—	—	—	65300	84200	19800
6.3	7295	1.0	230	12.0	—	GTN06 R4	BN132S4	M4SA4	25500	28900	59600	69400	19200
6.3	7539	2.8	230	18.0	GTN10 L3	—	BN132S4	—	—	—	77200	97100	35600
6.5	7301	1.8	223	11.0	GTN09 L3	—	BN132S4	—	—	—	64500	83200	19500
6.5	7237	1.8	221	11.0	GTN07 L3	—	BN132S4	M4SA4	28000	35100	63300	83000	24300
6.7	6768	1.4	214	12.0	—	GTN06 R4	BN132S4	M4SA4	24900	28200	58300	67900	18700
7.0	6514	2.2	206	15.0	—	GTN07 R4	BN132S4	M4SA4	27300	34300	62000	81200	23700
7.0	6709	1.2	205	7.5	GTN06 L3	—	BN132S4	M4SA4	24500	27800	57600	67000	18400
7.1	6604	1.7	202	11.0	GTN07 L3	—	BN132S4	M4SA4	27100	34000	61600	80700	23600
7.1	6604	2.5	202	11.0	GTN09 L3	—	BN132S4	—	—	—	62600	80700	18900
7.6	6041	2.3	191	15.0	—	GTN07 R4	BN132S4	M4SA4	26600	33400	60600	79400	23200
7.6	6041	2.9	191	15.0	—	GTN09 R4	BN132S4	—	—	—	61600	79400	18500
7.6	6215	1.0	190	7.5	GTN06 L3	—	BN132S4	M4SA4	23900	27100	56200	65500	18000
7.9	5983	2.4	183	11.0	GTN09 L3	—	BN132S4	—	—	—	60800	78400	18300
8.0	5733	1.6	181	12.0	—	GTN06 R4	BN132S4	M4SA4	23600	26700	55500	64600	17700
8.1	5799	2.1	177	11.0	GTN07 L3	—	BN132S4	M4SA4	26000	32600	59300	77700	22600
8.6	5316	1.4	168	12.0	—	GTN06 R4	BN132S4	M4SA4	23000	26000	54200	63100	17300
8.9	5292	2.0	162	11.0	GTN07 L3	—	BN132S4	M4SA4	25200	31600	57700	75600	21900
9.1	5016	1.1	158	12.0	—	GTN05 R4	BN132S4	M4SA4	18100	20900	32600	39200	11600
9.1	5001	1.9	158	12.0	—	GTN06 R4	BN132S4	M4SA4	22500	25500	53200	62000	16900
9.5	4980	1.5	152	7.5	GTN06 L3	—	BN132S4	M4SA4	22200	25200	52600	61300	16700
9.7	4694	1.0	148	12.0	—	GTN05 R4	BN132S4	M4SA4	17300	20000	31300	37600	11100
9.8	4794	2.8	146	11.0	GTN07 L3	—	BN132S4	M4SA4	24400	30600	56000	73300	21200
10.0	4722	1.2	144	14.0	—	GTN06 R3	BN132S4	M4SA4	21800	24700	51800	60300	16400
10.2	4634	1.1	141	7.5	GTN05 L3	—	BN132S4	M4SA4	17400	20100	31500	37900	11200
10.2	4618	1.7	141	7.5	GTN06 L3	—	BN132S4	M4SA4	21700	24600	51500	59900	16300
10.4	4546	2.4	139	11.0	GTN07 L3	—	BN132S4	M4SA4	24000	30100	55100	72200	20800
11.1	4095	1.3	129	12.0	—	GTN05 R4	BN132S4	M4SA4	16900	19500	30600	36900	10800
11.6	3929	2.8	124	15.0	—	GTN07 R4	BN132S4	M4SA4	24800	31100	56900	74500	21600
11.9	3973	2.0	121	7.5	GTN06 L3	—	BN132S4	M4SA4	20600	23400	49200	57300	15500
12.0	3923	2.2	120	22.0	—	GTN07 R3	BN132S4	M4SA4	22800	28600	52700	69100	19800
12.1	3904	1.7	119	14.0	—	GTN06 R3	BN132S4	M4SA4	20500	23200	48900	57000	15400
12.6	3747	1.0	114	14.0	—	GTN05 R3	BN132S4	M4SA4	16200	18700	29500	35500	10400
12.7	3711	2.8	113	11.0	GTN07 L3	—	BN132S4	M4SA4	22400	28100	51800	67900	19500
12.8	3691	1.0	113	7.5	GTN05 L3	—	BN132S4	M4SA4	16200	18600	29400	35400	10400
12.8	3680	2.0	112	7.5	GTN06 L3	—	BN132S4	M4SA4	20100	22800	48100	56000	15100
13.0	3620	0.9	111	7.5	GTN04 L3	—	BN132S4	M4SA4	16000	18500	29200	35200	10300
13.2	3469	1.0	109	12.0	—	GTN04 R4	BN132S4	—	16000	18500	29200	35100	10300

A

A

P_1 = 5.5 kW

n_2	M_2	S	i	Pt					Rn_2 [N]				
min^{-1}	Nm			kW					LK	LS	HK/MK	HS/MS	LSH
13.8	3424	1.0	105	7.5	GTN04 L3	—	BN132S4	M4SA4	15800	18200	28800	34600	10100
13.8	3424	1.5	105	7.5	GTN05 L3	—	BN132S4	M4SA4	15800	18200	28800	34600	10100
13.8	3414	2.6	104	7.5	GTN06 L3	—	BN132S4	M4SA4	19600	22200	47000	54700	14700
14.5	3243	2.6	99.0	22.0	—	GTN07 R3	BN132S4	M4SA4	21400	26900	49800	65200	18600
14.6	3227	2.0	98.5	14.0	—	GTN06 R3	BN132S4	M4SA4	19200	21800	46200	53800	14400
15.7	2998	1.2	91.5	14.0	—	GTN05 R3	BN132S4	M4SA4	15100	17400	27600	33200	9670
16.0	2955	1.1	90.2	7.5	GTN04 L3	—	BN132S4	M4SA4	15000	17300	27500	33100	9620
16.0	2955	1.4	90.2	7.5	GTN05 L3	—	BN132S4	M4SA4	15000	17300	27500	33100	9620
16.1	2831	1.2	89.4	12.0	—	GTN04 R4	BN132S4	—	15000	17300	27400	33000	9590
16.3	2892	3.0	88.3	7.5	GTN06 L3	—	BN132S4	M4SA4	18500	21000	44700	52100	13900
17.0	2776	2.7	84.7	14.0	—	GTN06 R3	BN132S4	M4SA4	18300	20700	44200	51400	13700
17.6	2681	2.6	81.9	7.5	GTN06 L3	—	BN132S4	M4SA4	18100	20500	43700	50900	13600
18.3	2579	1.1	78.7	14.0	—	GTN04 R3	BN132S4	—	14300	16500	26400	31800	9190
18.3	2579	1.7	78.7	14.0	—	GTN05 R3	BN132S4	M4SA4	14300	16500	26400	31800	9190
18.6	2530	1.0	77.2	7.5	GTN03 L3	—	BN132S4	M4SA4	14200	16400	26300	31600	9140
18.6	2530	1.4	77.2	7.5	GTN04 L3	—	BN132S4	M4SA4	14200	16400	26300	31600	9140
18.6	2530	1.9	77.2	7.5	GTN05 L3	—	BN132S4	M4SA4	14200	16400	26300	31600	9140
19.6	2402	1.5	73.3	14.0	—	GTN05 R3	BN132S4	M4SA4	14000	16200	25900	31100	8980
19.9	2453	2.2	72.5	13.0	GTN06 L2	—	BN132S4	M4SA4	17400	19700	42100	49100	13000
19.9	2368	1.4	72.3	7.5	GTN04 L3	—	BN132S4	M4SA4	13900	16100	25700	31000	8940
19.9	2368	0.9	72.3	7.5	GTN03 L3	—	BN132S4	M4SA4	13600	15700	25200	30300	8730
19.9	2368	1.8	72.3	7.5	GTN05 L3	—	BN132S4	M4SA4	13600	15700	25200	30300	8730
22.8	2066	1.1	63.1	14.0	—	GTN03 R3	BN132S4	—	13300	15400	24700	29700	8540
22.8	2066	1.4	63.1	14.0	—	GTN04 R3	BN132S4	—	13300	15400	24700	29700	8540
22.8	2066	2.1	63.1	14.0	—	GTN05 R3	BN132S4	M4SA4	13300	15400	24700	29700	8540
22.8	2066	1.2	63.1	7.5	GTN03 L3	—	BN132S4	M4SA4	13300	15400	24700	29700	8540
22.8	2066	1.7	63.1	7.5	GTN04 L3	—	BN132S4	M4SA4	13300	15400	24700	29700	8540
22.8	2066	2.3	63.1	7.5	GTN05 L3	—	BN132S4	M4SA4	13300	15400	24700	29700	8540
24.3	2001	1.2	59.1	9.0	GTN04 L2	—	BN132S4	M4SA4	13000	15000	24200	29200	8360
25.6	1903	2.7	56.3	13.0	GTN06 L2	—	BN132S4	M4SA4	16000	18100	39100	45500	12000
25.8	1888	1.0	55.8	9.0	GTN03 L2	—	BN132S4	M4SA4	12800	14800	23800	28700	8200
25.8	1888	1.9	55.8	9.0	GTN05 L2	—	BN132S4	M4SA4	12800	14800	23800	28700	8200
26.6	1775	1.0	54.2	14.0	—	GTN03 R3	BN132S4	—	12700	14600	23600	28400	8120
26.6	1775	2.0	54.2	14.0	—	GTN05 R3	BN132S4	M4SA4	12700	14600	23600	28400	8120
27.0	1750	1.2	53.4	7.5	GTN03 L3	—	BN132S4	M4SA4	12600	14500	23500	28300	8080
27.0	1750	1.8	53.4	7.5	GTN04 L3	—	BN132S4	M4SA4	12600	14500	23500	28300	8080
27.0	1750	2.3	53.4	7.5	GTN05 L3	—	BN132S4	M4SA4	12600	14500	23500	28300	8080
27.9	1691	1.0	51.6	7.5	GTN01 L3	—	BN132S4	M4SA4	3960	3960	11200	12800	2600
28.6	1652	1.0	50.4	12.0	—	GTN01 R3	BN132S4	—	3930	3930	11100	12700	2580
28.6	1647	1.4	50.3	14.0	—	GTN03 R3	BN132S4	—	12300	14200	23100	27800	7920
28.6	1647	2.1	50.3	14.0	—	GTN04 R3	BN132S4	—	12300	14200	23100	27800	7920
28.6	1647	2.7	50.3	14.0	—	GTN05 R3	BN132S4	M4SA4	12300	14200	23100	27800	7920
30	1601	1.5	47.3	9.0	GTN04 L2	—	BN132S4	M4SA4	12100	14000	22700	27300	7760
31	1527	1.4	46.6	14.0	—	GTN03 R3	BN132S4	—	12000	13900	22600	27200	7720
31	1527	1.9	46.6	14.0	—	GTN04 R3	BN132S4	—	12000	13900	22600	27200	7720
31	1527	2.8	46.6	14.0	—	GTN05 R3	BN132S4	M4SA4	12000	13900	22600	27200	7720
32	1511	1.2	44.6	9.0	GTN03 L2	—	BN132S4	M4SA4	11900	13700	22300	26800	7610
32	1511	2.4	44.6	9.0	GTN05 L2	—	BN132S4	M4SA4	11900	13700	22300	26800	7610
33	1428	2.2	43.6	7.5	GTN04 L3	—	BN132S4	M4SA4	11800	13600	22100	26600	7550
34	1395	1.5	42.6	14.0	—	GTN03 R3	BN132S4	—	11700	13500	22000	26400	7490
34	1395	2.3	42.6	14.0	—	GTN04 R3	BN132S4	—	11700	13500	22000	26400	7490
34	1395	2.7	42.6	14.0	—	GTN05 R3	BN132S4	M4SA4	11700	13500	22000	26400	7490
35	1406	0.9	41.5	7.5	GTN01 L2	—	BN132S4	M4SA4	3770	3770	10700	12300	2480
35	1348	1.0	41.2	12.0	—	GTN01 R3	BN132S4	—	3760	3760	10600	12200	2470
38	1299	1.7	38.4	9.0	GTN03 L2	—	BN132S4	M4SA4	11300	13000	21300	25600	7240
38	1299	2.2	38.4	9.0	GTN04 L2	—	BN132S4	M4SA4	11300	13000	21300	25600	7240
38	1298	1.2	38.4	7.5	GTN01 L2	—	BN132S4	M4SA4	3670	3670	10400	12000	2410
39	1221	1.3	37.3	12.0	—	GTN01 R3	BN132S4	—	3630	3630	10300	11900	2390
39	1217	2.0	37.1	14.0	—	GTN03 R3	BN132S4	—	11200	12900	21100	25400	7160
39	1217	2.8	37.1	14.0	—	GTN04 R3	BN132S4	—	11200	12900	21100	25400	7160
40	1210	1.5	35.8	9.0	GTN03 L2	—	BN132S4	M4SA4	11000	12700	20800	25100	7070
40	1210	2.9	35.8	9.0	GTN05 L2	—	BN132S4	M4SA4	11000	12700	20800	25100	7070
43	1126	1.2	33.3	7.5	GTN01 L2	—	BN132S4	M4SA4	3500	3500	9990	11500	2300
46	1031	2.0	31.5	14.0	—	GTN03 R3	BN132S4	—	10600	12200	20100	24100	6770
46	1031	3.0	31.5	14.0	—	GTN04 R3	BN132S4	—	10600	12200	20100	24100	6770
47	1041	2.1	30.8	9.0	GTN03 L2	—	BN132S4	M4SA4	10500	12100	19900	24000	6720
47	1041	2.7	30.8	9.0	GTN04 L2	—	BN132S4	M4SA4	10500	12100	19900	24000	6720

P_1 = 5.5 kW

n_2 min^{-1}	M_2 Nm	S	i	Pt kW					Rn_2 [N] LK	LS	HK/MK	HS/MS	LSH
47	1039	1.5	30.7	7.5	GTN01 L2	—	BN132S4	M4SA4	3410	3410	9750	11200	2240
47	996	1.6	30.4	12.0	—	GTN01 R3	BN132S4	—	3400	3400	9730	11200	2230
54	894	2.0	26.4	9.0	GTN03 L2	—	BN132S4	M4SA4	9960	11500	19000	22900	6390
56	841	2.4	25.7	14.0	—	GTN03 R3	BN132S4	—	9870	11400	18900	22700	6330
58	813	1.7	24.8	12.0	—	GTN01 R3	BN132S4	—	3170	3170	9150	10500	2090
58	838	1.0	24.8	18.0	—	GTN03 R2	BN132S4	M4SA4	9750	11300	18700	22500	6250
59	832	1.0	24.6	7.5	GTN00 L2	—	BN132S4	M4SA4	3090	3090	8940	10300	2030
59	832	1.8	24.6	7.5	GTN01 L2	—	BN132S4	M4SA4	3160	3160	9130	10500	2080
59	830	2.6	24.5	9.0	GTN03 L2	—	BN132S4	M4SA4	9720	11200	18600	22400	6230
63	769	2.7	22.7	9.0	GTN03 L2	—	BN132S4	M4SA4	9470	10900	18200	21900	6080
69	703	2.6	20.8	9.0	GTN03 L2	—	BN132S4	M4SA4	9190	10600	17700	21300	5900
72	679	0.9	20.1	7.5	GTN00 L2	—	BN132S4	M4SA4	2960	2960	8590	9870	1940
72	679	1.9	20.1	7.5	GTN01 L2	—	BN132S4	M4SA4	2960	2960	8590	9870	1940
75	650	2.4	19.2	18.0	—	GTN03 R2	BN132S4	M4SA4	8960	10300	17300	20800	5750
78	624	1.2	18.5	12.0	—	GTN01 R2	BN132S4	M4SA4	2870	2870	8370	9620	1890
79	615	1.2	18.2	7.5	GTN00 L2	—	BN132S4	M4SA4	2860	2860	8330	9580	1880
79	615	2.2	18.2	7.5	GTN01 L2	—	BN132S4	M4SA4	2860	2860	8330	9580	1880
97	502	1.4	14.8	7.5	GTN00 L2	—	BN132S4	M4SA4	2670	2670	7840	9010	1760
97	502	2.5	14.8	7.5	GTN01 L2	—	BN132S4	M4SA4	2670	2670	7840	9010	1760
98	499	1.0	14.8	12.0	—	GTN00 R2	BN132S4	M4SA4	2670	2670	7830	9000	1750
98	499	1.9	14.8	12.0	—	GTN01 R2	BN132S4	M4SA4	2670	2670	7830	9000	1750
119	410	1.7	12.1	7.5	GTN00 L2	—	BN132S4	M4SA4	2500	2500	7380	8480	1640
119	410	3.0	12.1	7.5	GTN01 L2	—	BN132S4	M4SA4	2500	2500	7380	8480	1640
122	400	1.5	11.8	12.0	—	GTN00 R2	BN132S4	M4SA4	2480	2480	7330	8420	1630
122	400	2.9	11.8	12.0	—	GTN01 R2	BN132S4	M4SA4	2480	2480	7330	8420	1630
149	338	2.2	9.67	11.0	GTN03 L1	—	BN132S4	M4SA4	7120	8220	14100	16900	4570
160	314	1.0	9.00	7.5	GTN00 L1	—	BN132S4	M4SA4	2260	2260	6750	7750	1490
160	314	2.0	9.00	7.5	GTN01 L1	—	BN132S4	M4SA4	2260	2260	6750	7750	1490
165	296	2.1	8.74	12.0	—	GTN00 R2	BN132S4	M4SA4	2240	2240	6690	7690	1470
200	251	1.6	7.20	7.5	GTN00 L1	—	BN132S4	M4SA4	2100	2100	6310	7250	1380
200	251	3.0	7.20	7.5	GTN01 L1	—	BN132S4	M4SA4	2100	2100	6310	7250	1380
202	241	2.4	7.13	12.0	—	GTN00 R2	BN132S4	M4SA4	2090	2090	6300	7230	1380
250	201	2.3	5.77	7.5	GTN00 L1	—	BN132S4	M4SA4	1950	1950	5910	6790	1280

P_1 = 7.5 kW

n_2 min^{-1}	M_2 Nm	S	i	Pt kW					Rn_2 [N] LK	LS	HK/MK	HS/MS	LSH
0.76	83274	1.9	1893	18.0	GTN17 L4	—	BN132MA4	—	—	—	442000	470000	150000
0.80	79431	1.1	1805	18.0	GTN15 L4	—	BN132MA4	—	—	—	206000	243000	90000
0.90	70166	2.4	1595	18.0	GTN17 L4	—	BN132MA4	—	—	—	442000	470000	150000
0.96	65663	1.3	1492	18.0	GTN15 L4	—	BN132MA4	—	—	—	206000	243000	90000
0.97	65339	1.0	1485	15.0	GTN14 L4	—	BN132MA4	—	—	—	206000	243000	90000
1.1	58004	2.9	1318	18.0	GTN17 L4	—	BN132MA4	—	—	—	434300	462400	147000
1.1	56484	1.7	1284	18.0	GTN15 L4	—	BN132MA4	—	—	—	201500	236600	87400
1.1	56205	1.4	1277	15.0	GTN14 L4	—	BN132MA4	—	—	—	201200	236300	87300
1.1	55684	1.0	1266	11.0	GTN13 L4	—	BN132MA4	—	—	—	188000	222500	77400
1.2	54449	2.2	1237	18.0	GTN16 L4	—	BN132MA4	—	—	—	331400	368600	144000
1.3	49144	1.1	1117	11.0	GTN13 L4	—	BN132MA4	—	—	—	181100	214300	74200
1.3	48588	2.0	1104	18.0	GTN15 L4	—	BN132MA4	—	—	—	192600	226200	83200
1.3	48349	1.6	1099	15.0	GTN14 L4	—	BN132MA4	—	—	—	192400	225800	83000
1.4	46570	0.9	1058	11.0	GTN11 L4	—	BN132MA4	—	—	—	141200	175900	57900
1.4	45878	2.2	1043	18.0	GTN15 L4	—	BN132MA4	—	—	—	189400	222300	81600
1.4	45878	2.9	1043	18.0	GTN16 L4	—	BN132MA4	—	—	—	314800	350100	136000
1.4	45651	1.8	1038	15.0	GTN14 L4	—	BN132MA4	—	—	—	189100	222000	81400
1.4	44619	1.2	1014	11.0	GTN13 L4	—	BN132MA4	—	—	—	175900	208200	71800
1.5	43379	1.0	986	11.0	GTN11 L4	—	BN132MA4	—	—	—	141100	175800	57800
1.5	40915	2.3	930	18.0	GTN15 L4	—	BN132MA4	—	—	—	183000	214800	78500
1.6	40738	1.8	926	15.0	GTN14 L4	—	BN132MA4	—	—	—	182700	214500	78400
1.6	40010	1.9	909	40.0	—	GTN15 R4	BN132MA4	—	—	—	181700	213400	77900
1.6	39764	1.2	904	11.0	GTN11 L4	—	BN132MA4	—	—	—	137500	171300	56200
1.6	39130	1.4	889	11.0	GTN13 L4	—	BN132MA4	—	—	—	169100	200100	68800
1.7	37926	2.7	862	18.0	GTN15 L4	—	BN132MA4	—	—	—	178800	210000	76600
1.7	37738	2.2	858	15.0	GTN14 L4	—	BN132MA4	—	—	—	178600	209700	76400

A

P_1 = 7.5 kW

n_2 min^{-1}	M_2 Nm	S	i	Pt kW					Rn_2 [N] LK	LS	HK/MK	HS/MS	LSH
1.7	36288	1.2	825	11.0	GTN11 L4	—	BN132MA4	—	—	—	133800	166600	54500
1.8	34755	1.5	790	11.0	GTN13 L4	—	BN132MA4	—	—	—	163200	193100	66100
1.8	34417	2.6	782	40.0	—	GTN15 R4	BN132MA4	—	—	—	173700	203900	74100
1.9	34248	1.3	778	22.0	—	GTN13 R4	BN132MA4	—	—	—	162500	192300	65800
1.9	32829	0.9	746	22.0	—	GTN11 R4	BN132MA4	—	—	—	129800	161700	52700
2.0	32463	2.5	738	15.0	GTN14 L4	—	BN132MA4	—	—	—	170700	200400	72700
2.0	31862	1.5	724	11.0	GTN11 L4	—	BN132MA4	—	—	—	128700	160300	52200
2.1	30585	1.7	695	11.0	GTN13 L4	—	BN132MA4	—	—	—	157000	185900	63300
2.2	29407	2.7	668	15.0	GTN14 L4	—	BN132MA4	—	—	—	165700	194500	70300
2.2	28452	1.8	647	22.0	—	GTN13 R4	BN132MA4	—	—	—	153700	181900	61800
2.3	28012	0.9	637	11.0	GTN10 L4	—	BN132MA4	—	—	—	104700	131700	50000
2.3	27848	1.9	633	11.0	GTN13 L4	—	BN132MA4	—	—	—	152700	180700	61400
2.3	27662	1.4	629	22.0	—	GTN11 R4	BN132MA4	—	—	—	123300	153600	49800
2.3	27574	1.4	627	11.0	GTN11 L4	—	BN132MA4	—	—	—	123200	153500	49700
2.3	27005	2.1	614	22.0	—	GTN14 R4	BN132MA4	—	—	—	161500	189600	68400
2.5	24978	1.7	568	11.0	GTN11 L4	—	BN132MA4	—	—	—	119600	149000	48100
2.6	24805	2.2	564	11.0	GTN13 L4	—	BN132MA4	—	—	—	147500	174500	59100
2.6	24460	1.3	556	11.0	GTN10 L4	—	BN132MA4	—	—	—	100600	126500	47800
2.7	23520	2.1	535	22.0	—	GTN13 R4	BN132MA4	—	—	—	145100	171800	58000
2.7	23230	3.0	528	22.0	—	GTN14 R4	BN132MA4	—	—	—	154400	181300	65000
2.8	22867	1.7	520	22.0	—	GTN11 R4	BN132MA4	—	—	—	116500	145100	46700
2.8	22754	1.1	517	15.0	—	GTN10 R4	BN132MA4	—	—	—	98400	123800	46600
2.8	22601	2.2	514	11.0	GTN13 L4	—	BN132MA4	—	—	—	143400	169700	57300
2.8	22533	2.0	512	11.0	GTN11 L4	—	BN132MA4	—	—	—	116000	144500	46500
2.8	22322	1.1	507	11.0	GTN10 L4	—	BN132MA4	—	—	—	97900	123000	46300
2.9	21828	2.4	496	22.0	—	GTN13 R4	BN132MA4	—	—	—	141900	168000	56600
2.9	21555	1.6	490	22.0	—	GTN11 R4	BN132MA4	—	—	—	114400	142500	45800
3.2	19983	1.0	454	15.0	—	GTN10 R4	BN132MA4	—	—	—	94700	119000	44700
3.2	19876	2.7	452	11.0	GTN13 L4	—	BN132MA4	—	—	—	138000	163300	54900
3.2	19829	1.5	451	11.0	GTN10 L4	—	BN132MA4	—	—	—	94400	118700	44500
3.2	19818	2.4	450	22.0	—	GTN13 R4	BN132MA4	—	—	—	137900	163200	54800
3.3	19268	1.9	438	22.0	—	GTN11 R4	BN132MA4	—	—	—	110600	137800	44100
3.4	18450	1.6	419	15.0	—	GTN10 R4	BN132MA4	—	—	—	92400	116200	43500
3.5	18184	1.0	413	15.0	—	GTN09 R4	BN132MA4	—	—	—	77700	100100	24000
3.5	18162	2.2	413	22.0	—	GTN11 R4	BN132MA4	—	—	—	108700	135400	43300
3.5	18055	2.3	410	11.0	GTN11 L4	—	BN132MA4	—	—	—	108500	135200	43200
3.6	17843	1.0	406	7.5	GTN09 L4	—	BN132MA4	—	—	—	77200	99600	23800
3.7	17233	1.1	392	11.0	GTN10 L4	—	BN132MA4	—	—	—	90500	113900	42500
3.7	17048	2.7	387	22.0	—	GTN13 R4	BN132MA4	—	—	—	131800	156000	52100
4.0	15982	1.5	363	15.0	—	GTN10 R4	BN132MA4	—	—	—	88500	111300	41500
4.1	15947	1.2	350	18.0	GTN10 L3	—	BN132MA4	—	—	—	87600	110100	41000
4.1	15359	1.0	349	7.5	GTN07 L4	—	BN132MA4	M4LA4	31800	40000	71200	93300	27700
4.1	15359	1.4	349	7.5	GTN09 L4	—	BN132MA4	—	—	—	73800	95200	22700
4.1	15294	2.6	348	11.0	GTN11 L4	—	BN132MA4	—	—	—	103200	128600	40900
4.2	15014	2.6	341	22.0	—	GTN11 R4	BN132MA4	—	—	—	102700	127900	40600
4.3	14702	1.9	334	15.0	—	GTN10 R4	BN132MA4	—	—	—	86300	108600	40300
4.3	14571	1.2	331	15.0	—	GTN09 R4	BN132MA4	—	—	—	72700	93700	22300
4.5	14152	2.8	322	22.0	—	GTN11 R4	BN132MA4	—	—	—	100900	125600	39800
4.7	13417	1.7	305	15.0	—	GTN10 R4	BN132MA4	—	—	—	84000	105600	39100
4.7	13821	2.8	304	18.0	GTN13L3	—	BN132MA4	—	—	—	122500	145000	48100
4.8	13199	1.1	300	15.0	—	GTN07 R4	BN132MA4	M4LA4	31000	38900	69400	91000	26900
4.9	13437	1.7	295	18.0	GTN10L3	—	BN132MA4	—	—	—	83200	104600	38700
4.9	12915	2.9	294	22.0	—	GTN11 R4	BN132MA4	—	—	—	98100	122200	38600
4.9	13248	2.0	291	18.0	GTN11 L3	—	BN132MA4	—	—	—	97900	121900	38500
5.1	12517	0.9	284	15.0	—	GTN07 R4	BN132MA4	M4LA4	29700	37300	66900	87700	25900
5.1	12517	1.4	284	15.0	—	GTN09 R4	BN132MA4	—	—	—	69400	89500	21200
5.1	12899	1.2	284	11.0	GTN09 L3	—	BN132MA4	—	—	—	69400	89400	21100
5.1	12454	2.1	283	15.0	—	GTN10 R4	BN132MA4	—	—	—	82100	103300	38100
5.6	11365	2.0	258	15.0	—	GTN10 R4	BN132MA4	—	—	—	79900	100500	37000
5.6	11354	1.3	258	15.0	—	GTN07 R4	BN132MA4	M4LA4	29500	37000	66400	87000	25600
5.6	11354	1.5	258	15.0	—	GTN09 R4	BN132MA4	—	—	—	67400	87000	20500
5.8	11340	1.6	249	18.0	GTN10 L3	—	BN132MA4	—	—	—	79100	99400	36600
6.0	10886	1.2	239	11.0	GTN09 L3	—	BN132MA4	—	—	—	65900	85000	20000
6.2	10295	2.4	234	15.0	—	GTN10 R4	BN132MA4	—	—	—	77600	97600	35800
6.2	10217	1.1	232	15.0	—	GTN07 R4	BN132MA4	M4LA4	28400	35700	64300	84200	24700
6.2	10217	1.6	232	15.0	—	GTN09 R4	BN132MA4	—	—	—	65300	84200	19800
6.3	10470	2.0	230	18.0	GTN10 L3	—	BN132MA4	—	—	—	77200	97100	35600

P_1 = 7.5 kW

n_2 min^{-1}	M_2 Nm	S	i	Pt kW					Rn_2 [N] LK	LS	HK/MK	HS/MS	LSH
6.5	10141	1.3	223	11.0	**GTN09 L3**	—	**BN132MA4**	—	—	—	64500	83200	19500
6.5	10051	1.3	221	11.0	**GTN07 L3**	—	**BN132MA4**	**M4LA4**	28000	35100	63300	83000	24300
6.7	9399	1.0	214	12.0	—	**GTN06 R4**	**BN132MA4**	**M4LA4**	24900	28200	58300	67900	18700
7.0	9057	2.4	206	15.0	—	**GTN10 R4**	**BN132MA4**	—	—	—	74700	93900	34300
7.0	9048	1.6	206	15.0	—	**GTN07 R4**	**BN132MA4**	**M4LA4**	27300	34300	62000	81200	23700
7.0	9048	2.2	206	15.0	—	**GTN09 R4**	**BN132MA4**	—	—	—	63000	81200	19000
7.1	9182	2.4	202	18.0	**GTN10 L3**	—	**BN132MA4**	—	—	—	74200	93300	34100
7.1	9173	1.2	202	11.0	**GTN07 L3**	—	**BN132MA4**	**M4LA4**	27100	34000	61600	80700	23600
7.1	9173	1.8	202	11.0	**GTN09 L3**	—	**BN132MA4**	—	—	—	62600	80700	18900
7.6	8390	1.7	191	15.0	—	**GTN07 R4**	**BN132MA4**	**M4LA4**	26600	33400	60600	79400	23200
7.6	8390	2.1	191	15.0	—	**GTN09 R4**	**BN132MA4**	—	—	—	61600	79400	18500
7.6	8331	2.8	189	15.0	—	**GTN10 R4**	**BN132MA4**	—	—	—	72800	91500	33400
7.9	8309	1.7	183	11.0	**GTN09 L3**	—	**BN132MA4**	—	—	—	60800	78400	18300
8.0	7962	1.2	181	12.0	—	**GTN06 R4**	**BN132MA4**	**M4LA4**	23600	26700	55500	64600	17700
8.1	8064	2.3	177	18.0	**GTN10 L3**	—	**BN132MA4**	—	—	—	71400	89800	32600
8.1	8054	1.5	177	11.0	**GTN07 L3**	—	**BN132MA4**	**M4LA4**	26000	32600	59300	77700	22600
8.6	7383	1.0	168	12.0	—	**GTN06 R4**	**BN132MA4**	**M4LA4**	23000	26000	54200	63100	17300
8.7	7268	2.2	165	15.0	—	**GTN09 R4**	**BN132MA4**	—	—	—	59000	76100	17700
8.8	7445	3.0	164	18.0	**GTN10 L3**	—	**BN132MA4**	—	—	—	69700	87600	31800
8.9	7350	1.5	162	11.0	**GTN07 L3**	—	**BN132MA4**	**M4LA4**	25200	31600	57700	75600	21900
8.9	7350	2.2	162	11.0	**GTN09 L3**	—	**BN132MA4**	—	—	—	58600	75600	17500
9.1	6946	1.4	158	12.0	—	**GTN06 R4**	**BN132MA4**	**M4LA4**	22500	25500	53200	62000	16900
9.5	6917	1.1	152	7.5	**GTN06 L3**	—	**BN132MA4**	**M4LA4**	22200	25200	52600	61300	16700
9.5	6686	2.8	152	15.0	—	**GTN09 R4**	**BN132MA4**	—	—	—	57500	74200	17200
9.8	6658	2.0	146	11.0	**GTN07 L3**	—	**BN132MA4**	**M4LA4**	24400	30600	56000	73300	21200
10.2	6414	1.2	141	7.5	**GTN06 L3**	—	**BN132MA4**	**M4LA4**	21700	24600	51500	59900	16300
10.4	6314	1.7	139	11.0	**GTN07 L3**	—	**BN132MA4**	**M4LA4**	24000	30100	55100	72200	20800
10.4	6314	2.5	139	11.0	**GTN09 L3**	—	**BN132MA4**	—	—	—	56000	72200	16700
11.1	5687	0.9	129	12.0	—	**GTN05 R4**	**BN132MA4**	**M4LA4**	16900	19500	30600	36900	10800
11.4	5727	2.3	126	11.0	**GTN07 L3**	—	**BN132MA4**	**M4LA4**	23200	29100	53500	70100	20200
11.4	5727	2.9	126	11.0	**GTN09 L3**	—	**BN132MA4**	—	—	—	54400	70100	16100
11.6	5458	2.0	124	15.0	—	**GTN07 R4**	**BN132MA4**	**M4LA4**	24800	31100	56900	74500	21600
11.9	5517	1.4	121	7.5	**GTN06 L3**	—	**BN132MA4**	**M4LA4**	20600	23400	49200	57300	15500
12.0	5449	1.6	120	22.0	—	**GTN07 R3**	**BN132MA4**	**M4LA4**	22800	28600	52700	69100	19800
12.0	5449	2.4	120	22.0	—	**GTN09 R3**	**BN132MA4**	—	—	—	53600	69100	15900
12.1	5422	1.2	119	14.0	—	**GTN06 R3**	**BN132MA4**	**M4LA4**	20500	23200	48900	57000	15400
12.7	5154	2.0	113	11.0	**GTN07 L3**	—	**BN132MA4**	**M4LA4**	22400	28100	51800	67900	19500
12.8	5111	1.4	112	7.5	**GTN06 L3**	—	**BN132MA4**	**M4LA4**	20100	22800	48100	56000	15100
13.7	4623	2.9	105	15.0	—	**GTN07 R4**	**BN132MA4**	**M4LA4**	24100	30300	55400	72700	21000
13.8	4756	1.1	105	7.5	**GTN05 L3**	—	**BN132MA4**	**M4LA4**	15800	18200	28800	34600	10100
13.8	4741	1.9	104	7.5	**GTN06 L3**	—	**BN132MA4**	**M4LA4**	19600	22200	47000	54700	14700
14.4	4564	2.7	100	11.0	**GTN07 L3**	—	**BN132MA4**	**M4LA4**	21500	27000	50000	65500	18700
14.5	4504	1.9	99.0	22.0	—	**GTN07 R3**	**BN132MA4**	**M4LA4**	21400	26900	49800	65200	18600
14.5	4504	2.8	99.0	22.0	—	**GTN09 R3**	**BN132MA4**	—	—	—	50600	65200	14900
14.6	4482	1.4	98.5	14.0	—	**GTN06 R3**	**BN132MA4**	**M4LA4**	19200	21800	46200	53800	14400
15.5	4232	2.9	93.0	11.0	**GTN07 L3**	—	**BN132MA4**	**M4LA4**	21000	26300	48900	64000	18200
16.0	4104	1.0	90.2	7.5	**GTN05 L3**	—	**BN132MA4**	**M4LA4**	15000	17300	27500	33100	9620
16.3	4016	2.1	88.3	7.5	**GTN06 L3**	—	**BN132MA4**	**M4LA4**	18500	21000	44700	52100	13900
17.0	3856	2.0	84.7	14.0	—	**GTN06 R3**	**BN132MA4**	**M4LA4**	18300	20700	44200	51400	13700
17.3	3795	2.7	83.4	22.0	—	**GTN07 R3**	**BN132MA4**	**M4LA4**	20200	25400	47300	62000	17600
17.6	3724	1.9	81.9	7.5	**GTN06 L3**	—	**BN132MA4**	**M4LA4**	18100	20500	43700	50900	13600
17.9	3666	2.8	80.6	11.0	**GTN07 L3**	—	**BN132MA4**	**M4LA4**	20000	25100	46800	61300	17400
18.3	3582	1.2	78.7	14.0	—	**GTN05 R3**	**BN132MA4**	**M4LA4**	14300	16500	26400	31800	9190
18.6	3514	1.0	77.2	7.5	**GTN04 L3**	—	**BN132MA4**	**M4LA4**	14200	16400	26300	31600	9140
18.6	3514	1.4	77.2	7.5	**GTN05 L3**	—	**BN132MA4**	**M4LA4**	14200	16400	26300	31600	9140
18.7	3504	2.4	77.0	7.5	**GTN06 L3**	—	**BN132MA4**	**M4LA4**	17700	20100	42900	50000	13300
19.6	3336	1.1	73.3	14.0	—	**GTN05 R3**	**BN132MA4**	**M4LA4**	14000	16200	25900	31100	8980
19.8	3317	2.2	72.9	14.0	—	**GTN06 R3**	**BN132MA4**	**M4LA4**	17400	19700	42200	49200	13100
19.9	3407	1.6	72.5	13.0	**GTN06 L2**	—	**BN132MA4**	**M4LA4**	17400	19700	42100	49100	13000
19.9	3289	1.0	72.3	7.5	**GTN04 L3**	—	**BN132MA4**	**M4LA4**	13900	16100	25700	31000	8940
19.9	3289	1.3	72.3	7.5	**GTN05 L3**	—	**BN132MA4**	**M4LA4**	13900	16100	25700	31000	8940
21.3	3072	2.3	67.5	14.0	—	**GTN06 R3**	**BN132MA4**	**M4LA4**	17000	19200	41300	48000	12700
22.1	2968	2.5	65.2	7.5	**GTN06 L3**	—	**BN132MA4**	**M4LA4**	16800	19000	40800	47500	12600
22.8	2870	1.0	63.1	14.0	—	**GTN04 R3**	**BN132MA4**	—	13300	15400	24700	29700	8540
22.8	2870	1.5	63.1	14.0	—	**GTN05 R3**	**BN132MA4**	**M4LA4**	13300	15400	24700	29700	8540
22.8	2869	1.2	63.1	7.5	**GTN04 L3**	—	**BN132MA4**	**M4LA4**	13300	15400	24700	29700	8540
22.8	2869	1.6	63.1	7.5	**GTN05 L3**	—	**BN132MA4**	**M4LA4**	13300	15400	24700	29700	8540

A

A

P_1 = 7.5 kW

n_2 min^{-1}	M_2 Nm	S	i	Pt kW					Rn_2 [N] LK	LS	HK/MK	HS/MS	LSH
24.8	2643	2.9	58.1	14.0	—	GTN06 R3	BN132MA4	M4LA4	16100	18300	39400	45900	12100
25.6	2644	2.0	56.3	13.0	GTN06 L2	—	BN132MA4	M4LA4	16000	18100	39100	45500	12000
25.8	2623	1.3	55.8	9.0	GTN05 L2	—	BN132MA4	M4LA4	12800	14800	23800	28700	8200
26.6	2465	1.4	54.2	14.0	—	GTN05 R3	BN132MA4	M4LA4	12700	14600	23600	28400	8120
27.0	2430	1.3	53.4	7.5	GTN04 L3	—	BN132MA4	M4LA4	12600	14500	23500	28300	8080
27.0	2430	1.6	53.4	7.5	GTN05 L3	—	BN132MA4	M4LA4	12600	14500	23500	28300	8080
27.0	2423	2.9	53.2	7.5	GTN06 L3	—	BN132MA4	M4LA4	15700	17800	38400	44700	11800
28.6	2287	1.0	50.3	14.0	—	GTN03 R3	BN132MA4	—	12300	14200	23100	27800	7920
28.6	2287	1.5	50.3	14.0	—	GTN04 R3	BN132MA4	—	12300	14200	23100	27800	7920
28.6	2287	1.9	50.3	14.0	—	GTN05 R3	BN132MA4	M4LA4	12300	14200	23100	27800	7920
30	2224	1.1	47.3	9.0	GTN04 L2	—	BN132MA4	M4LA4	12100	14000	22700	27300	7760
31	2121	1.0	46.6	14.0	—	GTN03 R3	BN132MA4	—	12000	13900	22600	27200	7720
31	2121	1.3	46.6	14.0	—	GTN04 R3	BN132MA4	—	12000	13900	22600	27200	7720
31	2121	2.0	46.6	14.0	—	GTN05 R3	BN132MA4	M4LA4	12000	13900	22600	27200	7720
31	2185	3.0	46.5	13.0	GTN06 L2	—	BN132MA4	M4LA4	15000	17000	36900	43000	11300
32	2098	1.7	44.6	9.0	GTN05 L2	—	BN132MA4	M4LA4	11900	13700	22300	26800	7610
33	1984	1.6	43.6	7.5	GTN04 L3	—	BN132MA4	M4LA4	11800	13600	22100	26600	7550
34	1937	1.1	42.6	14.0	—	GTN03 R3	BN132MA4	—	11700	13500	22000	26400	7490
34	1937	1.6	42.6	14.0	—	GTN04 R3	BN132MA4	—	11700	13500	22000	26400	7490
34	1937	2.0	42.6	14.0	—	GTN05 R3	BN132MA4	M4LA4	11700	13500	22000	26400	7490
38	1805	1.2	38.4	9.0	GTN03L2	—	BN132MA4	M4LA4	11300	13000	21300	25600	7240
38	1805	1.6	38.4	9.0	GTN04 L2	—	BN132MA4	M4LA4	11300	13000	21300	25600	7240
38	1805	2.4	38.4	9.0	GTN05 L2	—	BN132MA4	M4LA4	11300	13000	21300	25600	7240
39	1695	0.9	37.3	10.0	—	GTN01 R3	BN132MA4	—	3550	3550	10100	11600	2330
39	1690	1.4	37.1	14.0	—	GTN03 R3	BN132MA4	—	11200	12900	21100	25400	7160
39	1690	2.0	37.1	14.0	—	GTN04 R3	BN132MA4	—	11200	12900	21100	25400	7160
39	1690	2.6	37.1	14.0	—	GTN05 R3	BN132MA4	M4LA4	11200	12900	21100	25400	7160
40	1681	1.1	35.8	9.0	GTN03 L2	—	BN132MA4	M4LA4	11000	12700	20800	25100	7070
40	1681	2.1	35.8	9.0	GTN05 L2	—	BN132MA4	M4LA4	11000	12700	20800	25100	7070
46	1432	1.5	31.5	14.0	—	GTN03 R3	BN132MA4	—	10600	12200	20100	24100	6770
46	1432	2.2	31.5	14.0	—	GTN04 R3	BN132MA4	—	10600	12200	20100	24100	6770
46	1432	2.6	31.5	14.0	—	GTN05 R3	BN132MA4	M4LA4	10600	12200	20100	24100	6770
47	1446	1.5	30.8	9.0	GTN03 L2	—	BN132MA4	M4LA4	10500	12100	19900	24000	6720
47	1446	2.0	30.8	9.0	GTN04 L2	—	BN132MA4	M4LA4	10500	12100	19900	24000	6720
47	1446	3.0	30.8	9.0	GTN05 L2	—	BN132MA4	M4LA4	10500	12100	19900	24000	6720
47	1443	1.1	30.7	7.5	GTN01 L2	—	BN132MA4	M4LA4	3410	3410	9750	11200	2240
47	1384	1.1	30.4	12.0	—	GTN01 R3	BN132MA4	—	3400	3400	9730	11200	2230
54	1242	1.5	26.4	9.0	GTN03 L2	—	BN132MA4	M4LA4	9960	11500	19000	22900	6390
54	1242	2.8	26.4	9.0	GTN05 L2	—	BN132MA4	M4LA4	9960	11500	19000	22900	6390
56	1169	1.7	25.7	14.0	—	GTN03 R3	BN132MA4	—	9870	11400	18900	22700	6330
56	1169	2.6	25.7	14.0	—	GTN04 R3	BN132MA4	—	9870	11400	18900	22700	6330
58	1130	1.2	24.8	12.0	—	GTN01 R3	BN132MA4	—	3170	3170	9150	10500	2090
59	1156	1.3	24.6	7.5	GTN01 L2	—	BN132MA4	M4LA4	3160	3160	9130	10500	2080
59	1152	1.9	24.5	9.0	GTN03 L2	—	BN132MA4	M4LA4	9720	11200	18600	22400	6230
59	1152	2.8	24.5	9.0	GTN04 L2	—	BN132MA4	M4LA4	9720	11200	18600	22400	6230
63	1069	2.0	22.7	9.0	GTN03 L2	—	BN132MA4	M4LA4	9470	10900	18200	21900	6080
63	1069	2.6	22.7	9.0	GTN04 L2	—	BN132MA4	M4LA4	9470	10900	18200	21900	6080
69	976	1.9	20.8	9.0	GTN03 L2	—	BN132MA4	M4LA4	9190	10600	17700	21300	5900
72	944	1.3	20.1	7.5	GTN01 L2	—	BN132MA4	M4LA4	2960	2960	8590	9870	1940
75	903	1.7	19.2	18.0	—	GTN03 R2	BN132MA4	M4LA4	8960	10300	17300	20800	5750
79	854	1.6	18.2	7.5	GTN01 L2	—	BN132MA4	M4LA4	2860	2860	8330	9580	1880
79	852	2.4	18.1	9.0	GTN03 L2	—	BN132MA4	M4LA4	8780	10100	17000	20400	5630
91	747	2.4	15.9	18.0	—	GTN03 R2	BN132MA4	M4LA4	8410	9710	16300	19700	5390
94	721	2.4	15.3	9.0	GTN03 L2	—	BN132MA4	M4LA4	8310	9590	16200	19500	5330
97	697	1.0	14.8	7.5	GTN00 L2	—	BN132MA4	M4LA4	2610	2610	7680	8820	1720
97	697	1.8	14.8	7.5	GTN01 L2	—	BN132MA4	M4LA4	2670	2670	7840	9010	1760
98	694	1.4	14.8	12.0	—	GTN01 R2	BN132MA4	M4LA4	2670	2670	7830	9000	1750
115	589	2.8	12.5	9.0	GTN03 L2	—	BN132MA4	M4LA4	7770	8970	15200	18300	4980
119	569	1.2	12.1	7.5	GTN00 L2	—	BN132MA4	M4LA4	2500	2500	7380	8480	1640
119	569	2.1	12.1	7.5	GTN01 L2	—	BN132MA4	M4LA4	2500	2500	7380	8480	1640
122	556	1.1	11.8	12.0	—	GTN00 R2	BN132MA4	M4LA4	2480	2480	7330	8420	1630
122	556	2.1	11.8	12.0	—	GTN01 R2	BN132MA4	M4LA4	2480	2480	7330	8420	1630
149	469	1.6	9.67	11.0	GTN03 L1	—	BN132MA4	M4LA4	7120	8220	14100	16900	4570
160	437	1.4	9.00	7.5	GTN01 L1	—	BN132MA4	M4LA4	2260	2260	6750	7750	1490
165	411	1.5	8.74	12.0	—	GTN00 R2	BN132MA4	M4LA4	2240	2240	6690	7690	1470
165	411	2.7	8.74	12.0	—	GTN01 R2	BN132MA4	M4LA4	2240	2240	6690	7690	1470
200	349	1.2	7.20	7.5	GTN00 L1	—	BN132MA4	M4LA4	2100	2100	6310	7250	1380

P_1 = 7.5 kW

n_2 min^{-1}	M_2 Nm	S	i	Pt kW					Rn_2 [N] LK	LS	HK/MK	HS/MS	LSH
200	349	2.1	7.20	7.5	**GTN01 L1**	—	**BN132MA4**	**M4LA4**	2100	2100	6310	7250	1380
202	335	1.7	7.13	12.0	—	**GTN00 R2**	**BN132MA4**	**M4LA4**	2090	2090	6300	7230	1380
250	280	1.7	5.77	7.5	**GTN00 L1**	—	**BN132MA4**	**M4LA4**	1950	1950	5910	6790	1280
338	207	2.4	4.26	7.5	**GTN00 L1**	—	**BN132MA4**	**M4LA4**	1760	1760	5390	6200	1160
414	169	2.8	3.48	7.5	**GTN00 L1**	—	**BN132MA4**	**M4LA4**	1610	1610	4970	5710	1060

P_1 = 9.2 kW

n_2 min^{-1}	M_2 Nm	S	i	Pt kW					Rn_2 [N] LK	LS	HK/MK	HS/MS	LSH
0.76	101595	1.5	1893	18.0	**GTN17 L4**	—	**BN132MB4**	—	—	—	442000	470000	150000
0.90	85603	2.0	1595	18.0	**GTN17 L4**	—	**BN132MB4**	—	—	—	442000	470000	150000
0.96	80109	1.0	1492	18.0	**GTN15 L4**	—	**BN132MB4**	—	—	—	206000	243000	90000
1.1	70765	2.4	1318	18.0	**GTN17 L4**	—	**BN132MB4**	—	—	—	434300	462400	147000
1.1	68911	1.4	1284	18.0	**GTN15 L4**	—	**BN132MB4**	—	—	—	201500	236600	87400
1.1	68570	1.1	1277	15.0	**GTN14 L4**	—	**BN132MB4**	—	—	—	201200	236300	87300
1.2	66427	1.8	1237	18.0	**GTN16 L4**	—	**BN132MB4**	—	—	—	331400	368600	144000
1.3	60873	2.8	1134	18.0	**GTN17 L4**	—	**BN132MB4**	—	—	—	415100	442000	139800
1.3	59278	1.6	1104	18.0	**GTN15 L4**	—	**BN132MB4**	—	—	—	192600	226200	83200
1.3	58985	1.3	1099	15.0	**GTN14 L4**	—	**BN132MB4**	—	—	—	192400	225800	83000
1.4	55971	1.8	1043	18.0	**GTN15 L4**	—	**BN132MB4**	—	—	—	189400	222300	81600
1.4	55971	2.4	1043	18.0	**GTN16 L4**	—	**BN132MB4**	—	—	—	314800	350100	136000
1.4	55695	1.5	1038	15.0	**GTN14 L4**	—	**BN132MB4**	—	—	—	189100	222000	81400
1.4	54435	1.0	1014	11.0	**GTN13 L4**	—	**BN132MB4**	—	—	—	175900	208200	71800
1.5	51174	2.8	953	50.0	—	**GTN17 R4**	**BN132MB4**	—	—	—	394100	419600	132000
1.5	49916	1.9	930	18.0	**GTN15 L4**	—	**BN132MB4**	—	—	—	183000	214800	78500
1.6	49701	1.5	926	15.0	**GTN14 L4**	—	**BN132MB4**	—	—	—	182700	214500	78400
1.6	48812	1.6	909	40.0	—	**GTN15 R4**	**BN132MB4**	—	—	—	181700	213400	77900
1.6	48512	1.0	904	11.0	**GTN11 L4**	—	**BN132MB4**	—	—	—	137500	171300	56200
1.6	47739	1.1	889	11.0	**GTN13 L4**	—	**BN132MB4**	—	—	—	169100	200100	68800
1.7	46269	2.2	862	18.0	**GTN15 L4**	—	**BN132MB4**	—	—	—	178800	210000	76600
1.7	46269	2.8	862	18.0	**GTN16 L4**	—	**BN132MB4**	—	—	—	297400	330700	127600
1.7	46041	1.8	858	15.0	**GTN14 L4**	—	**BN132MB4**	—	—	—	178600	209700	76400
1.7	44271	1.0	825	11.0	**GTN11 L4**	—	**BN132MB4**	—	—	—	133800	166600	54500
1.8	43614	3.0	812	18.0	**GTN16 L4**	—	**BN132MB4**	—	—	—	292100	324900	125100
1.8	42401	1.2	790	11.0	**GTN13 L4**	—	**BN132MB4**	—	—	—	163200	193100	66100
1.8	41989	2.2	782	40.0	—	**GTN15 R4**	**BN132MB4**	—	—	—	173700	203900	74100
1.9	41782	1.1	778	22.0	—	**GTN13 R4**	**BN132MB4**	—	—	—	162500	192300	65800
1.9	39777	2.5	741	18.0	**GTN15 L4**	—	**BN132MB4**	—	—	—	170900	200700	72800
2.0	39605	2.0	738	15.0	**GTN14 L4**	—	**BN132MB4**	—	—	—	170700	200400	72700
2.0	38872	1.2	724	11.0	**GTN11 L4**	—	**BN132MB4**	—	—	—	128700	160300	52200
2.1	37314	1.4	695	11.0	**GTN13 L4**	—	**BN132MB4**	—	—	—	157000	185900	63300
2.1	36054	2.8	672	18.0	**GTN15 L4**	—	**BN132MB4**	—	—	—	165900	194800	70500
2.2	35876	2.2	668	15.0	**GTN14 L4**	—	**BN132MB4**	—	—	—	165700	194500	70300
2.2	35379	2.5	659	40.0	—	**GTN15 R4**	**BN132MB4**	—	—	—	165000	193700	70000
2.2	34711	1.5	647	22.0	—	**GTN13 R4**	**BN132MB4**	—	—	—	153700	181900	61800
2.3	33975	1.5	633	11.0	**GTN13 L4**	—	**BN132MB4**	—	—	—	152700	180700	61400
2.3	33747	1.2	629	22.0	—	**GTN11 R4**	**BN132MB4**	—	—	—	123300	153600	49800
2.3	33640	1.2	627	11.0	**GTN11 L4**	—	**BN132MB4**	—	—	—	123200	153500	49700
2.3	33460	3.0	623	40.0	—	**GTN15 R4**	**BN132MB4**	—	—	—	162300	190500	68700
2.3	32946	1.7	614	22.0	—	**GTN14 R4**	**BN132MB4**	—	—	—	161500	189600	68400
2.4	31560	2.5	588	15.0	**GTN14 L4**	—	**BN132MB4**	—	—	—	159500	187200	67400
2.5	30473	1.4	568	11.0	**GTN11 L4**	—	**BN132MB4**	—	—	—	119600	149000	48100
2.6	30263	1.8	564	11.0	**GTN13 L4**	—	**BN132MB4**	—	—	—	147500	174500	59100
2.6	29841	1.1	556	11.0	**GTN10 L4**	—	**BN132MB4**	—	—	—	100600	126500	47800
2.6	29749	2.7	554	15.0	**GTN14 L4**	—	**BN132MB4**	—	—	—	156600	183900	66100
2.7	28695	1.7	535	22.0	—	**GTN13 R4**	**BN132MB4**	—	—	—	145100	171800	58000
2.7	28341	2.4	528	22.0	—	**GTN14 R4**	**BN132MB4**	—	—	—	154400	181300	65000
2.8	27898	1.4	520	22.0	—	**GTN11 R4**	**BN132MB4**	—	—	—	116500	145100	46700
2.8	27760	0.9	517	15.0	—	**GTN10 R4**	**BN132MB4**	—	—	—	98400	123800	46600
2.8	27573	1.8	514	11.0	**GTN13 L4**	—	**BN132MB4**	—	—	—	143400	169700	57300
2.8	27490	1.6	512	11.0	**GTN11 L4**	—	**BN132MB4**	—	—	—	116000	144500	46500
2.8	27233	0.9	507	11.0	**GTN10 L4**	—	**BN132MB4**	—	—	—	97900	123000	46300
2.9	26630	2.0	496	22.0	—	**GTN13 R4**	**BN132MB4**	—	—	—	141900	168000	56600

A

A

P_1 = 9.2 kW

n_2 min^{-1}	M_2 Nm	S	i	Pt kW					Rn_2 [N] LK	LS	HK/MK	HS/MS	LSH
2.9	26547	3.0	495	15.0	**GTN14L4**	—	**BN132MB4**	—	—	—	151400	177700	63600
2.9	26297	1.3	490	22.0	—	**GTN11 R4**	**BN132MB4**	—	—	—	114400	142500	45800
3.2	24249	2.2	452	11.0	**GTN13 L4**	—	**BN132MB4**	—	—	—	138000	163300	54900
3.2	24191	1.2	451	11.0	**GTN10 L4**	—	**BN132MB4**	—	—	—	94400	118700	44500
3.2	24178	2.0	450	22.0	—	**GTN13 R4**	**BN132MB4**	—	—	—	137900	163200	54800
3.2	23880	2.8	445	22.0	—	**GTN14 R4**	**BN132MB4**	—	—	—	146700	172200	61400
3.3	23506	1.6	438	22.0	—	**GTN11 R4**	**BN132MB4**	—	—	—	110600	137800	44100
3.4	22509	1.3	419	15.0	—	**GTN10 R4**	**BN132MB4**	—	—	—	92400	116200	43500
3.5	22157	1.8	413	22.0	—	**GTN11 R4**	**BN132MB4**	—	—	—	108700	135400	43300
3.5	22027	1.9	410	11.0	**GTN11 L4**	—	**BN132MB4**	—	—	—	108500	135200	43200
3.7	21154	2.6	394	11.0	**GTN13 L4**	—	**BN132MB4**	—	—	—	132500	156800	52400
3.7	21024	0.9	392	11.0	**GTN10 L4**	—	**BN132MB4**	—	—	—	90500	113900	42500
3.7	20798	2.2	387	22.0	—	**GTN13 R4**	**BN132MB4**	—	—	—	131800	156000	52100
4.0	19498	1.2	363	15.0	—	**GTN10 R4**	**BN132MB4**	—	—	—	88500	111300	41500
4.1	18895	2.8	352	11.0	**GTN13 L4**	—	**BN132MB4**	—	—	—	128000	151500	50500
4.1	19455	1.0	350	18.0	**GTN10 L3**	—	**BN132MB4**	—	—	—	87600	110100	41000
4.1	18738	1.1	349	7.5	**GTN09 L4**	—	**BN132MB4**	—	—	—	73800	95200	22700
4.1	18658	2.1	348	11.0	**GTN11 L4**	—	**BN132MB4**	—	—	—	103200	128600	40900
4.2	18549	2.9	346	22.0	—	**GTN13 R4**	**BN132MB4**	—	—	—	127300	150700	50200
4.2	18317	2.1	341	22.0	—	**GTN11 R4**	**BN132MB4**	—	—	—	102700	127900	40600
4.3	17937	1.5	334	15.0	—	**GTN10 R4**	**BN132MB4**	—	—	—	86300	108600	40300
4.3	17776	1.0	331	15.0	—	**GTN09 R4**	**BN132MB4**	—	—	—	72700	93700	22300
4.5	17265	2.3	322	22.0	—	**GTN11 R4**	**BN132MB4**	—	—	—	100900	125600	39800
4.7	16574	2.7	309	22.0	—	**GTN13 R4**	**BN132MB4**	—	—	—	123100	145700	48300
4.7	16369	1.4	305	15.0	—	**GTN10 R4**	**BN132MB4**	—	—	—	84000	105600	39100
4.7	16861	2.3	304	18.0	**GTN13 L3**	—	**BN132MB4**	—	—	—	122500	145000	48100
4.9	16393	1.4	295	18.0	**GTN10 L3**	—	**BN132MB4**	—	—	—	83200	104600	38700
4.9	15756	2.4	294	22.0	—	**GTN11 R4**	**BN132MB4**	—	—	—	98100	122200	38600
4.9	16163	1.7	291	18.0	**GTN11 L3**	—	**BN132MB4**	—	—	—	97900	121900	38500
5.1	15270	1.1	284	15.0	—	**GTN09 R4**	**BN132MB4**	—	—	—	69400	89500	21200
5.1	15737	1.0	284	11.0	**GTN09 L3**	—	**BN132MB4**	—	—	—	69400	89400	21100
5.1	15194	1.7	283	15.0	—	**GTN10 R4**	**BN132MB4**	—	—	—	82100	103300	38100
5.4	14273	2.6	266	22.0	—	**GTN11 R4**	**BN132MB4**	—	—	—	95300	118700	37400
5.6	13866	1.6	258	15.0	—	**GTN10 R4**	**BN132MB4**	—	—	—	79900	100500	37000
5.6	13852	1.1	258	15.0	—	**GTN07 R4**	**BN132MB4**	**M4LB4**	29500	37000	66400	87000	25600
5.6	13852	1.3	258	15.0	—	**GTN09 R4**	**BN132MB4**	—	—	—	67400	87000	20500
5.8	13835	1.3	249	18.0	**GTN10 L3**	—	**BN132MB4**	—	—	—	79100	99400	36600
5.9	13619	2.5	245	18.0	**GTN11 L3**	—	**BN132MB4**	—	—	—	93000	115800	36400
6.0	13281	1.0	239	11.0	**GTN09 L3**	—	**BN132MB4**	—	—	—	65900	85000	20000
6.2	12560	2.0	234	15.0	—	**GTN10 R4**	**BN132MB4**	—	—	—	77600	97600	35800
6.2	12465	1.3	232	15.0	—	**GTN09 R4**	**BN132MB4**	—	—	—	65300	84200	19800
6.3	12774	1.7	230	18.0	**GTN10 L3**	—	**BN132MB4**	—	—	—	77200	97100	35600
6.3	12278	2.9	229	22.0	—	**GTN11 R4**	**BN132MB4**	—	—	—	91100	113400	35500
6.5	12372	1.1	223	11.0	**GTN09 L3**	—	**BN132MB4**	—	—	—	64500	83200	19500
6.5	12263	1.0	221	11.0	**GTN07 L3**	—	**BN132MB4**	**M4LB4**	28000	35100	63300	83000	24300
7.0	11049	2.0	206	15.0	—	**GTN10 R4**	**BN132MB4**	—	—	—	74700	93900	34300
7.0	11038	1.3	206	15.0	—	**GTN07 R4**	**BN132MB4**	**M4LB4**	27300	34300	62000	81200	23700
7.0	11038	1.8	206	15.0	—	**GTN09 R4**	**BN132MB4**	—	—	—	63000	81200	19000
7.1	11258	3.0	203	18.0	**GTN11 L3**	—	**BN132MB4**	—	—	—	87800	109400	34100
7.1	11202	2.0	202	18.0	**GTN10 L3**	—	**BN132MB4**	—	—	—	74200	93300	34100
7.1	11191	1.0	202	11.0	**GTN07 L3**	—	**BN132MB4**	**M4LB4**	27100	34000	61600	80700	23600
7.1	11191	1.5	202	11.0	**GTN09 L3**	—	**BN132MB4**	—	—	—	62600	80700	18900
7.6	10236	1.4	191	15.0	—	**GTN07 R4**	**BN132MB4**	**M4LB4**	26600	33400	60600	79400	23200
7.6	10236	1.7	191	15.0	—	**GTN09 R4**	**BN132MB4**	—	—	—	61600	79400	18500
7.6	10164	2.3	189	15.0	—	**GTN10 R4**	**BN132MB4**	—	—	—	72800	91500	33400
7.9	10137	1.4	183	11.0	**GTN09 L3**	—	**BN132MB4**	—	—	—	60800	78400	18300
8.0	9713	1.0	181	12.0	—	**GTN06 R4**	**BN132MB4**	**M4LB4**	23000	26100	54300	63200	17300
8.1	9838	1.9	177	18.0	**GTN10 L3**	—	**BN132MB4**	—	—	—	71400	89800	32600
8.1	9826	1.3	177	11.0	**GTN07 L3**	—	**BN132MB4**	**M4LB4**	26000	32600	59300	77700	22600
8.7	8867	1.8	165	15.0	—	**GTN09 R4**	**BN132MB4**	—	—	—	59000	76100	17700
8.8	9083	2.4	164	18.0	**GTN10 L3**	—	**BN132MB4**	—	—	—	69700	87600	31800
8.9	8967	1.2	162	11.0	**GTN07 L3**	—	**BN132MB4**	**M4LB4**	25200	31600	57700	75600	21900
8.9	8967	1.8	162	11.0	**GTN09 L3**	—	**BN132MB4**	—	—	—	58600	75600	17500
9.0	8610	2.6	160	15.0	—	**GTN10 R4**	**BN132MB4**	—	—	—	69300	87100	31600
9.1	8474	1.1	158	12.0	—	**GTN06 R4**	**BN132MB4**	**M4LB4**	22500	25500	53200	62000	16900
9.5	8157	2.3	152	15.0	—	**GTN09 R4**	**BN132MB4**	—	—	—	57500	74200	17200
9.8	8123	1.6	146	11.0	**GTN07 L3**	—	**BN132MB4**	**M4LB4**	24400	30600	56000	73300	21200

P_1 = 9.2 kW

n_2 min^{-1}	M_2 Nm	S	i	Pt kW					Rn_2 [N] LK	LS	HK/MK	HS/MS	LSH
10.2	7869	2.6	142	18.0	GTN10 L3	—	BN132MB4	—	—	—	66700	83900	30300
10.2	7825	1.0	141	7.5	GTN06 L3	—	BN132MB4	M4LB4	21700	24600	51500	59900	16300
10.4	7703	1.4	139	11.0	GTN07 L3	—	BN132MB4	M4LB4	24000	30100	55100	72200	20800
10.4	7703	2.1	139	11.0	GTN09 L3	—	BN132MB4	—	—	—	56000	72200	16700
10.6	7293	2.9	136	15.0	—	GTN10 R4	BN132MB4	—	—	—	65900	82900	29900
11.0	7238	2.9	130	18.0	GTN10 L3	—	BN132MB4	—	—	—	65100	81900	29500
11.4	6987	1.9	126	11.0	GTN07 L3	—	BN132MB4	M4LB4	23200	29100	53500	70100	20200
11.4	6987	2.3	126	11.0	GTN09 L3	—	BN132MB4	—	—	—	54400	70100	16100
11.6	6658	1.6	124	15.0	—	GTN07 R4	BN132MB4	M4LB4	24800	31100	56900	74500	21600
11.9	6731	1.2	121	7.5	GTN06 L3	—	BN132MB4	M4LB4	20600	23400	49200	57300	15500
12.0	6647	1.3	120	22.0	—	GTN07 R3	BN132MB4	M4LB4	22800	28600	52700	69100	19800
12.0	6647	1.9	120	22.0	—	GTN09 R3	BN132MB4	—	—	—	53600	69100	15900
12.0	6647	2.6	120	22.0	—	GTN10 R3	BN132MB4	—	—	—	63500	79800	28600
12.1	6615	1.0	119	14.0	—	GTN06 R3	BN132MB4	M4LB4	20500	23200	48900	57000	15400
12.1	6606	3.0	119	18.0	GTN10 L3	—	BN132MB4	—	—	—	63300	79600	28600
12.7	6288	1.7	113	11.0	GTN07 L3	—	BN132MB4	M4LB4	22400	28100	51800	67900	19500
12.7	6288	2.5	113	11.0	GTN09 L3	—	BN132MB4	—	—	—	52700	67900	15600
12.8	6236	1.2	112	7.5	GTN06 L3	—	BN132MB4	M4LB4	20100	22800	48100	56000	15100
13.7	5640	2.4	105	15.0	—	GTN07R4	BN132MB4	M4LB4	24100	30300	55400	72700	21000
13.8	5785	1.5	104	7.5	GTN06L3	—	BN132MB4	M4LB4	19600	22200	47000	54700	14700
14.4	5568	2.2	100	11.0	GTN07 L3	—	BN132MB4	M4LB4	21500	27000	50000	65500	18700
14.4	5568	3.0	100	11.0	GTN09 L3	—	BN132MB4	—	—	—	50800	65500	15000
14.5	5495	1.6	99.0	22.0	—	GTN07 R3	BN132MB4	M4LB4	21400	26900	49800	65200	18600
14.5	5495	2.3	99.0	22.0	—	GTN09 R3	BN132MB4	—	—	—	50600	65200	14900
14.5	5495	3.0	99.0	22.0	—	GTN10 R3	BN132MB4	—	—	—	59900	75400	26900
14.6	5468	1.2	98.5	14.0	—	GTN06 R3	BN132MB4	M4LB4	19200	21800	46200	53800	14400
15.5	5163	2.4	93.0	11.0	GTN07 L3	—	BN132MB4	M4LB4	21000	26300	48900	64000	18200
15.5	5163	2.9	93.0	11.0	GTN09 L3	—	BN132MB4	—	—	—	49600	64000	14600
16.3	4900	1.7	88.3	7.5	GTN06 L3	—	BN132MB4	M4LB4	18500	21000	44700	52100	13900
17.0	4704	1.6	84.7	14.0	—	GTN06 R3	BN132MB4	M4LB4	18300	20700	44200	51400	13700
17.3	4630	2.2	83.4	22.0	—	GTN07 R3	BN132MB4	M4LB4	20200	25400	47300	62000	17600
17.6	4544	1.5	81.9	7.5	GTN06 L3	—	BN132MB4	M4LB4	18100	20500	43700	50900	13600
17.9	4473	2.3	80.6	11.0	GTN07 L3	—	BN132MB4	M4LB4	20000	25100	46800	61300	17400
18.3	4370	1.0	78.7	14.0	—	GTN05 R3	BN132MB4	M4LB4	14300	16500	26400	31800	9190
18.3	4364	2.5	78.6	22.0	—	GTN07 R3	BN132MB4	M4LB4	19800	24900	46500	60900	17200
18.6	4288	1.1	77.2	7.5	GTN05 L3	—	BN132MB4	M4LB4	14200	16400	26300	31600	9140
18.7	4274	2.0	77.0	7.5	GTN06 L3	—	BN132MB4	M4LB4	17700	20100	42900	50000	13300
19.4	4114	2.8	74.1	11.0	GTN07 L3	—	BN132MB4	M4LB4	19400	24400	45600	59800	16900
19.8	4046	1.8	72.9	14.0	—	GTN06 R3	BN132MB4	M4LB4	17400	19700	42200	49200	13100
19.9	4157	1.3	72.5	13.0	GTN06 L2	—	BN132MB4	M4LB4	17400	19700	42100	49100	13000
19.9	4012	1.0	72.3	7.5	GTN05 L3	—	BN132MB4	M4LB4	13900	16100	25700	31000	8940
20.1	3983	2.5	71.8	22.0	—	GTN07 R3	BN132MB4	M4LB4	19200	24100	45200	59200	16700
21.3	3748	1.9	67.5	14.0	—	GTN06 R3	BN132MB4	M4LB4	17000	19200	41300	48000	12700
22.1	3621	2.1	65.2	7.5	GTN06 L3	—	BN132MB4	M4LB4	16800	19000	40800	47500	12600
22.8	3501	1.2	63.1	14.0	—	GTN05 R3	BN132MB4	M4LB4	13300	15400	24700	29700	8540
22.8	3500	1.0	63.1	7.5	GTN04 L3	—	BN132MB4	M4LB4	13300	15400	24700	29700	8540
22.8	3500	1.3	63.1	7.5	GTN05 L3	—	BN132MB4	M4LB4	13300	15400	24700	29700	8540
24.8	3224	2.4	58.1	14.0	—	GTN06 R3	BN132MB4	M4LB4	16100	18300	39400	45900	12100
25.6	3225	1.6	56.3	13.0	GTN06 L2	—	BN132MB4	M4LB4	16000	18100	39100	45500	12000
25.8	3200	1.1	55.8	9.0	GTN05 L2	—	BN132MB4	M4LB4	12800	14800	23800	28700	8200
26.6	3008	1.2	54.2	14.0	—	GTN05 R3	BN132MB4	M4LB4	12700	14600	23600	28400	8120
27.0	2965	1.1	53.4	7.5	GTN04 L3	—	BN132MB4	M4LB4	12600	14500	23500	28300	8080
27.0	2965	1.3	53.4	7.5	GTN05 L3	—	BN132MB4	M4LB4	12600	14500	23500	28300	8080
27.0	2956	2.4	53.2	7.5	GTN06 L3	—	BN132MB4	M4LB4	15700	17800	38400	44700	11800
28.6	2790	1.2	50.3	14.0	—	GTN04 R3	BN132MB4	—	12300	14200	23100	27800	7920
28.6	2790	1.6	50.3	14.0	—	GTN05 R3	BN132MB4	M4LB4	12300	14200	23100	27800	7920
31	2587	1.1	46.6	14.0	—	GTN04 R3	BN132MB4	—	12000	13900	22600	27200	7720
31	2587	1.7	46.6	14.0	—	GTN05 R3	BN132MB4	M4LB4	12000	13900	22600	27200	7720
31	2666	2.4	46.5	13.0	GTN06 L2	—	BN132MB4	M4LB4	15000	17000	36900	43000	11300
31	2569	2.9	46.3	14.0	—	GTN06 R3	BN132MB4	M4LB4	15000	16900	36800	42900	11200
32	2560	1.4	44.6	9.0	GTN05 L2	—	BN132MB4	M4LB4	11900	13700	22300	26800	7610
33	2420	1.3	43.6	7.5	GTN04 L3	—	BN132MB4	M4LB4	11800	13600	22100	26600	7550
34	2363	1.3	42.6	14.0	—	GTN04 R3	BN132MB4	—	11700	13500	22000	26400	7490
34	2363	1.6	42.6	14.0	—	GTN05 R3	BN132MB4	M4LB4	11700	13500	22000	26400	7490
37	2204	2.9	38.4	13.0	GTN06 L2	—	BN132MB4	M4LB4	14100	15900	34800	40600	10600
38	2202	1.0	38.4	9.0	GTN03 L2	—	BN132MB4	M4LB4	11300	13000	21300	25600	7240
38	2202	1.3	38.4	9.0	GTN04 L2	—	BN132MB4	M4LB4	11300	13000	21300	25600	7240

A

A

P_1 = 9.2 kW

n_2 min^{-1}	M_2 Nm	S	i	Pt kW					Rn_2 [N] LK	LS	HK/MK	HS/MS	LSH
38	2202	2.0	38.4	9.0	**GTN05 L2**	—	**BN132MB4**	**M4LB4**	11300	13000	21300	25600	7240
39	2062	1.2	37.1	14.0	—	**GTN03 R3**	**BN132MB4**	—	11200	12900	21100	25400	7160
39	2062	1.7	37.1	14.0	—	**GTN04 R3**	**BN132MB4**	—	11200	12900	21100	25400	7160
39	2062	2.1	37.1	14.0	—	**GTN05 R3**	**BN132MB4**	**M4LB4**	11200	12900	21100	25400	7160
40	2051	1.7	35.8	9.0	**GTN05 L2**	—	**BN132MB4**	**M4LB4**	11000	12700	20800	25100	7070
46	1746	1.2	31.5	14.0	—	**GTN03 R3**	**BN132MB4**	—	10600	12200	20100	24100	6770
46	1746	1.8	31.5	14.0	—	**GTN04 R3**	**BN132MB4**	—	10600	12200	20100	24100	6770
46	1746	2.2	31.5	14.0	—	**GTN05 R3**	**BN132MB4**	**M4LB4**	10600	12200	20100	24100	6770
47	1764	1.2	30.8	9.0	**GTN03 L2**	—	**BN132MB4**	**M4LB4**	10500	12100	19900	24000	6720
47	1764	1.6	30.8	9.0	**GTN04 L2**	—	**BN132MB4**	**M4LB4**	10500	12100	19900	24000	6720
47	1764	2.4	30.8	9.0	**GTN05 L2**	—	**BN132MB4**	**M4LB4**	10500	12100	19900	24000	6720
47	1688	0.9	30.4	10.0	—	**GTN01 R3**	**BN132MB4**	—	3320	3320	9530	10900	2180
54	1516	1.2	26.4	9.0	**GTN03 L2**	—	**BN132MB4**	**M4LB4**	9960	11500	19000	22900	6390
54	1516	2.3	26.4	9.0	**GTN05 L2**	—	**BN132MB4**	**M4LB4**	9960	11500	19000	22900	6390
56	1426	1.4	25.7	14.0	—	**GTN03 R3**	**BN132MB4**	—	9870	11400	18900	22700	6330
56	1426	2.1	25.7	14.0	—	**GTN04 R3**	**BN132MB4**	—	9870	11400	18900	22700	6330
56	1426	2.5	25.7	14.0	—	**GTN05 R3**	**BN132MB4**	**M4LB4**	9870	11400	18900	22700	6330
58	1378	1.0	24.8	12.0	—	**GTN01 R3**	**BN132MB4**	—	3170	3170	9150	10500	2090
59	1410	1.1	24.6	7.5	**GTN01 L2**	—	**BN132MB4**	**M4LB4**	3160	3160	9130	10500	2080
59	1406	1.5	24.5	9.0	**GTN03 L2**	—	**BN132MB4**	**M4LB4**	9720	11200	18600	22400	6230
59	1406	2.3	24.5	9.0	**GTN04 L2**	—	**BN132MB4**	**M4LB4**	9720	11200	18600	22400	6230
59	1406	2.7	24.5	9.0	**GTN05 L2**	—	**BN132MB4**	**M4LB4**	9720	11200	18600	22400	6230
63	1304	1.6	22.7	9.0	**GTN03 L2**	—	**BN132MB4**	**M4LB4**	9470	10900	18200	21900	6080
63	1304	2.1	22.7	9.0	**GTN04 L2**	—	**BN132MB4**	**M4LB4**	9470	10900	18200	21900	6080
69	1191	1.5	20.8	9.0	**GTN03 L2**	—	**BN132MB4**	**M4LB4**	9470	10900	18200	21900	6080
69	1191	2.5	20.8	9.0	**GTN04 L2**	—	**BN132MB4**	**M4LB4**	9190	10600	17700	21300	5900
69	1191	2.7	20.8	9.0	**GTN05 L2**	—	**BN132MB4**	**M4LB4**	9190	10600	17700	21300	5900
72	1151	1.1	20.1	7.5	**GTN01 L2**	—	**BN132MB4**	**M4LB4**	2960	2960	8590	9870	1940
75	1102	1.4	19.2	18.0	—	**GTN03 R2**	**BN132MB4**	**M4LB4**	8960	10300	17300	20800	5750
75	1102	2.6	19.2	18.0	—	**GTN05 R2**	**BN132MB4**	**M4LB4**	8960	10300	17300	20800	5750
79	1042	1.3	18.2	7.5	**GTN01 L2**	—	**BN132MB4**	**M4LB4**	2860	2860	8330	9580	1880
79	1039	1.9	18.1	9.0	**GTN03 L2**	—	**BN132MB4**	**M4LB4**	8780	10100	17000	20400	5630
79	1039	2.8	18.1	9.0	**GTN04 L2**	—	**BN132MB4**	**M4LB4**	8780	10100	17000	20400	5630
86	966	2.5	16.8	18.0	—	**GTN04 R2**	**BN132MB4**	**M4LB4**	8570	9900	16600	20000	5500
91	911	2.0	15.9	18.0	—	**GTN03 R2**	**BN132MB4**	**M4LB4**	8410	9710	16300	19700	5390
94	880	1.9	15.3	9.0	**GTN03 L2**	—	**BN132MB4**	**M4LB4**	8310	9590	16200	19500	5330
97	851	1.5	14.8	7.5	**GTN01 L2**	—	**BN132MB4**	**M4LB4**	2670	2670	7840	9010	1760
98	846	1.1	14.8	12.0	—	**GTN01 R2**	**BN132MB4**	**M4LB4**	2670	2670	7830	9000	1750
105	784	2.5	13.7	18.0	—	**GTN03 R2**	**BN132MB4**	**M4LB4**	8000	9230	15600	18800	5130
115	718	2.3	12.5	9.0	**GTN03 L2**	—	**BN132MB4**	**M4LB4**	7770	8970	15200	18300	4980
119	694	1.0	12.1	7.5	**GTN00 L2**	—	**BN132MB4**	**M4LB4**	2440	2440	7230	8300	1600
119	694	1.8	12.1	7.5	**GTN01 L2**	—	**BN132MB4**	**M4LB4**	2500	2500	7380	8480	1640
122	678	1.7	11.8	12.0	—	**GTN01 R2**	**BN132MB4**	**M4LB4**	2480	2480	7330	8420	1630
149	572	1.3	9.67	11.0	**GTN03 L1**	—	**BN132MB4**	**M4LB4**	7120	8220	14100	16900	4570
160	533	1.2	9.00	7.5	**GTN01 L1**	—	**BN132MB4**	**M4LB4**	2260	2260	6750	7750	1490
165	501	1.2	8.74	12.0	—	**GTN00 R2**	**BN132MB4**	**M4LB4**	2240	2240	6690	7690	1470
165	501	2.2	8.74	12.0	—	**GTN01 R2**	**BN132MB4**	**M4LB4**	2240	2240	6690	7690	1470
192	444	2.7	7.50	11.0	**GTN03 L1**	—	**BN132MB4**	**M4LB4**	6550	7560	13000	15700	4200
200	426	1.0	7.20	7.5	**GTN00 L1**	—	**BN132MB4**	**M4LB4**	2100	2100	6310	7250	1380
200	426	1.8	7.20	7.5	**GTN01 L1**	—	**BN132MB4**	**M4LB4**	2100	2100	6310	7250	1380
202	409	1.4	7.13	12.0	—	**GTN00 R2**	**BN132MB4**	**M4LB4**	2090	2090	6300	7230	1380
202	409	2.5	7.13	12.0	—	**GTN01 R2**	**BN132MB4**	**M4LB4**	2090	2090	6300	7230	1380
250	341	1.4	5.77	7.5	**GTN00 L1**	—	**BN132MB4**	**M4LB4**	1950	1950	5910	6790	1280
250	341	2.7	5.77	7.5	**GTN01 L1**	—	**BN132MB4**	**M4LB4**	1950	1950	5910	6790	1280
338	252	1.9	4.26	7.5	**GTN00 L1**	—	**BN132MB4**	**M4LB4**	1760	1760	5390	6200	1160
414	206	2.3	3.48	7.5	**GTN00 L1**	—	**BN132MB4**	**M4LB4**	1610	1610	4970	5710	1060

P_1 = 11 kW

n_2 min^{-1}	M_2 Nm	S	i	Pt kW					Rn_2 [N] LK	LS	HK/MK	HS/MS	LSH
0.76	121580	1.3	1893	18.0	**GTN17 L4**	—	**BN160MR4**	—	—	—	442000	470000	150000
0.90	102443	1.7	1595	18.0	**GTN17 L4**	—	**BN160MR4**	—	—	—	442000	470000	150000
1.1	84686	2.0	1318	18.0	**GTN17 L4**	—	**BN160MR4**	—	—	—	434300	462400	147000

P_1 = 11 kW

n_2 min^{-1}	M_2 Nm	S	i	Pt kW					Rn_2 [N] LK	LS	HK/MK	HS/MS	LSH
1.1	82467	1.2	1284	18.0	GTN15 L4	—	BN160MR4	—	—	—	201500	236600	87400
1.1	82060	0.9	1277	15.0	GTN14 L4	—	BN160MR4	—	—	—	201200	236300	87300
1.2	79495	1.5	1237	18.0	GTN16 L4	—	BN160MR4	—	—	—	331400	368600	144000
1.3	72848	2.3	1134	18.0	GTN17 L4	—	BN160MR4	—	—	—	415100	442000	139800
1.3	70939	1.3	1104	18.0	GTN15 L4	—	BN160MR4	—	—	—	192600	226200	83200
1.3	70589	1.1	1099	15.0	GTN14 L4	—	BN160MR4	—	—	—	192400	225800	83000
1.4	66982	1.5	1043	18.0	GTN15 L4	—	BN160MR4	—	—	—	189400	222300	81600
1.4	66982	2.0	1043	18.0	GTN16 L4	—	BN160MR4	—	—	—	314800	350100	136000
1.4	66651	1.2	1038	15.0	GTN14 L4	—	BN160MR4	—	—	—	189100	222000	81400
1.4	66317	2.7	1032	18.0	GTN17 L4	—	BN160MR4	—	—	—	403600	429700	135500
1.5	61240	2.4	953	50.0	—	GTN17 R4	BN160MR4	—	—	—	394100	419600	132000
1.5	59735	1.6	930	18.0	GTN15 L4	—	BN160MR4	—	—	—	183000	214800	78500
1.6	59478	1.2	926	15.0	GTN14 L4	—	BN160MR4	—	—	—	182700	214500	78400
1.6	58414	1.3	909	40.0	—	GTN15 R4	BN160MR4	—	—	—	181700	213400	77900
1.6	58051	2.9	904	18.0	GTN17 L4	—	BN160MR4	—	—	—	387800	412900	129600
1.6	57130	0.9	889	11.0	GTN13 L4	—	BN160MR4	—	—	—	169100	200100	68800
1.7	55372	1.8	862	18.0	GTN15 L4	—	BN160MR4	—	—	—	178800	210000	76600
1.7	55372	2.3	862	18.0	GTN16 L4	—	BN160MR4	—	—	—	297400	330700	127600
1.7	55098	1.5	858	15.0	GTN14 L4	—	BN160MR4	—	—	—	178600	209700	76400
1.8	52194	2.5	812	18.0	GTN16 L4	—	BN160MR4	—	—	—	292100	324900	125100
1.8	50742	1.0	790	11.0	GTN13 L4	—	BN160MR4	—	—	—	163200	193100	66100
1.8	50249	1.8	782	40.0	—	GTN15 R4	BN160MR4	—	—	—	173700	203900	74100
1.9	47602	2.1	741	18.0	GTN15 L4	—	BN160MR4	—	—	—	170900	200700	72800
1.9	47602	2.7	741	18.0	GTN16 L4	—	BN160MR4	—	—	—	284200	316100	121400
2.0	47396	1.7	738	15.0	GTN14 L4	—	BN160MR4	—	—	—	170700	200400	72700
2.0	46656	2.8	726	18.0	GTN16 L4	—	BN160MR4	—	—	—	282500	314100	120500
2.0	46518	1.0	724	11.0	GTN11 L4	—	BN160MR4	—	—	—	128700	160300	52200
2.1	44655	1.1	695	11.0	GTN13 L4	—	BN160MR4	—	—	—	157000	185900	63300
2.1	43978	2.9	685	18.0	GTN16 L4	—	BN160MR4	—	—	—	277500	308600	118200
2.1	43147	2.3	672	18.0	GTN15 L4	—	BN160MR4	—	—	—	165900	194800	70500
2.2	42934	1.9	668	15.0	GTN14 L4	—	BN160MR4	—	—	—	165700	194500	70300
2.2	42339	2.1	659	40.0	—	GTN15 R4	BN160MR4	—	—	—	165000	193700	70000
2.2	41540	1.2	647	22.0	—	GTN13 R4	BN160MR4	—	—	—	153700	181900	61800
2.3	40659	1.3	633	11.0	GTN13 L4	—	BN160MR4	—	—	—	152700	180700	61400
2.3	40386	1.0	629	22.0	—	GTN11 R4	BN160MR4	—	—	—	123300	153600	49800
2.3	40258	1.0	627	11.0	GTN11 L4	—	BN160MR4	—	—	—	123200	153500	49700
2.3	40042	2.5	623	40.0	—	GTN15 R4	BN160MR4	—	—	—	162300	190500	68700
2.3	40042	2.9	623	45.0	—	GTN16 R4	BN160MR4	—	—	—	269800	300100	114500
2.3	39427	1.5	614	22.0	—	GTN14 R4	BN160MR4	—	—	—	161500	189600	68400
2.4	37956	2.6	591	18.0	GTN15 L4	—	BN160MR4	—	—	—	159700	187500	67500
2.4	37769	2.1	588	15.0	GTN14 L4	—	BN160MR4	—	—	—	159500	187200	67400
2.5	36468	1.2	568	11.0	GTN11 L4	—	BN160MR4	—	—	—	119600	149000	48100
2.6	36216	1.5	564	11.0	GTN13 L4	—	BN160MR4	—	—	—	147500	174500	59100
2.6	35601	2.2	554	15.0	GTN14 L4	—	BN160MR4	—	—	—	156600	183900	66100
2.7	34340	1.4	535	22.0	—	GTN13 R4	BN160MR4	—	—	—	145100	171800	58000
2.7	34269	2.9	533	18.0	GTN15 L4	—	BN160MR4	—	—	—	154900	181800	65200
2.7	33916	2.0	528	22.0	—	GTN14 R4	BN160MR4	—	—	—	154400	181300	65000
2.7	33739	2.9	525	40.0	—	GTN15 R4	BN160MR4	—	—	—	154100	181000	64900
2.8	33386	1.2	520	22.0	—	GTN11 R4	BN160MR4	—	—	—	116500	145100	46700
2.8	32997	1.5	514	11.0	GTN13 L4	—	BN160MR4	—	—	—	143400	169700	57300
2.8	32898	1.3	512	11.0	GTN11 L4	—	BN160MR4	—	—	—	116000	144500	46500
2.9	31869	1.6	496	22.0	—	GTN13 R4	BN160MR4	—	—	—	141900	168000	56600
2.9	31770	2.5	495	15.0	GTN14 L4	—	BN160MR4	—	—	—	151400	177700	63600
2.9	31470	1.1	490	22.0	—	GTN11 R4	BN160MR4	—	—	—	114400	142500	45800
3.1	29430	2.7	458	15.0	GTN14 L4	—	BN160MR4	—	—	—	148000	173700	62000
3.2	29019	1.9	452	11.0	GTN13 L4	—	BN160MR4	—	—	—	138000	163300	54900
3.2	28950	1.0	451	11.0	GTN10 L4	—	BN160MR4	—			92500	116300	43500
3.2	28934	1.6	450	22.0	—	GTN13 R4	BN160MR4	—	—	—	137900	163200	54800
3.2	28577	2.4	445	22.0	—	GTN14 R4	BN160MR4	—	—	—	146700	172200	61400
3.3	28131	1.3	438	22.0	—	GTN11 R4	BN160MR4	—	—	—	110600	137800	44100
3.4	27027	2.9	421	22.0	—	GTN14 R4	BN160MR4	—	—	—	144200	169300	60300
3.4	26937	1.1	419	15.0	—	GTN10 R4	BN160MR4	—	—	—	92400	116200	43500
3.5	26516	1.5	413	22.0	—	GTN11 R4	BN160MR4	—	—	—	108700	135400	43300
3.5	26360	1.6	410	11.0	GTN11 L4	—	BN160MR4	—	—	—	108500	135200	43200
3.7	25315	2.2	394	11.0	GTN13 L4	—	BN160MR4	—	—	—	132500	156800	52400
3.7	24890	1.9	387	22.0	—	GTN13 R4	BN160MR4	—	—	—	131800	156000	52100
4.0	23334	1.0	363	15.0	—	GTN10 R4	BN160MR4	—	—	—	88500	111300	41500

A

A

P_1 = 11 kW

n_2 min^{-1}	M_2 Nm	S	i	Pt kW					Rn_2 [N] LK	LS	HK/MK	HS/MS	LSH
4.1	22612	2.3	352	11.0	**GTN13 L4**	—	**BN160MR4**	—	—	—	128000	151500	50500
4.1	22424	0.9	349	7.5	**GTN09 L4**	—	**BN160MR4**	—	—	—	72300	93300	22100
4.1	22329	1.8	348	11.0	**GTN11 L4**	—	**BN160MR4**	—	—	—	103200	128600	40900
4.2	22198	2.4	346	22.0	—	**GTN13 R4**	**BN160MR4**	—	—	—	127300	150700	50200
4.2	21920	1.8	341	22.0	—	**GTN11 R4**	**BN160MR4**	—	—	—	102700	127900	40600
4.3	21465	1.3	334	15.0	—	**GTN10 R4**	**BN160MR4**	—	—	—	86300	108600	40300
4.5	20662	1.9	322	22.0	—	**GTN11 R4**	**BN160MR4**	—	—	—	100900	125600	39800
4.7	19834	2.2	309	22.0	—	**GTN13 R4**	**BN160MR4**	—	—	—	123100	145700	48300
4.7	19589	1.2	305	15.0	—	**GTN10 R4**	**BN160MR4**	—	—	—	84000	105600	39100
4.7	20178	1.9	304	18.0	**GTN13 L3**	—	**BN160MR4**	—	—	—	122500	145000	48100
4.9	19618	1.2	295	18.0	**GTN10 L3**	—	**BN160MR4**	—	—	—	83200	104600	38700
4.9	18856	2.0	294	22.0	—	**GTN11 R4**	**BN160MR4**	—	—	—	98100	122200	38600
4.9	19342	1.4	291	18.0	**GTN11 L3**	—	**BN160MR4**	—	—	—	97900	121900	38500
5.1	18274	0.9	284	15.0	—	**GTN09 R4**	**BN160MR4**	—	—	—	68000	87700	20700
5.1	18182	1.4	283	15.0	—	**GTN10 R4**	**BN160MR4**	—	—	—	82100	103300	38100
5.1	18059	2.7	281	22.0	—	**GTN13 R4**	**BN160MR4**	—	—	—	119700	141700	46800
5.4	17081	2.2	266	22.0	—	**GTN11 R4**	**BN160MR4**	—	—	—	95300	118700	37400
5.6	16593	1.4	258	15.0	—	**GTN10 R4**	**BN160MR4**	—	—	—	79900	100500	37000
5.6	16577	1.0	258	15.0	—	**GTN09 R4**	**BN160MR4**	—	—	—	67400	87000	20500
5.7	16763	2.7	252	18.0	**GTN13 L3**	—	**BN160MR4**	—	—	—	115900	137100	45200
5.8	16556	1.1	249	18.0	**GTN10 L3**	—	**BN160MR4**	—	—	—	79100	99400	36600
5.9	16298	2.1	245	18.0	**GTN11 L3**	—	**BN160MR4**	—	—	—	93000	115800	36400
6.1	15217	2.7	237	22.0	—	**GTN13 R4**	**BN160MR4**	—	—	—	113700	134600	44200
6.2	15031	1.6	234	15.0	—	**GTN10 R4**	**BN160MR4**	—	—	—	77600	97600	35800
6.2	14917	1.1	232	15.0	—	**GTN09 R4**	**BN160MR4**	—	—	—	65300	84200	19800
6.3	15286	1.4	230	18.0	**GTN10 L3**	—	**BN160MR4**	—	—	—	77200	97100	35600
6.3	14693	2.4	229	22.0	—	**GTN11 R4**	**BN160MR4**	—	—	—	91100	113400	35500
7.0	13223	1.7	206	15.0	—	**GTN10 R4**	**BN160MR4**	—	—	—	74700	93900	34300
7.0	13209	1.1	206	15.0	—	**GTN07 R4**	**BN160MR4**	**M4LC4**	27300	34300	62000	81200	23700
7.0	13209	1.5	206	15.0	—	**GTN09 R4**	**BN160MR4**	—	—	—	63000	81200	19000
7.1	13473	2.5	203	18.0	**GTN11 L3**	—	**BN160MR4**	—	—	—	87800	109400	34100
7.1	13406	1.6	202	18.0	**GTN10 L3**	—	**BN160MR4**	—	—	—	74200	93300	34100
7.1	13392	1.2	202	11.0	**GTN09 L3**	—	**BN160MR4**	—	—	—	62600	80700	18900
7.2	12889	2.7	201	22.0	—	**GTN13 R4**	**BN160MR4**	—	—	—	108200	128000	41900
7.3	12728	2.7	198	22.0	—	**GTN11 R4**	**BN160MR4**	—	—	—	87200	108600	33900
7.5	12700	2.5	191	18.0	**GTN11 L3**	—	**BN160MR4**	—	—	—	86300	107500	33500
7.6	12249	1.1	191	15.0	—	**GTN07 R4**	**BN160MR4**	**M4LC4**	26600	33400	60600	79400	23200
7.6	12249	1.4	191	15.0	—	**GTN09 R4**	**BN160MR4**	—	—	—	61600	79400	18500
7.6	12164	1.9	189	15.0	—	**GTN10 R4**	**BN160MR4**	—	—	—	72800	91500	33400
7.8	11857	2.7	185	22.0	—	**GTN13 R4**	**BN160MR4**	—	—	—	105500	124900	40700
7.9	12131	1.2	183	11.0	**GTN09 L3**	—	**BN160MR4**	—	—	—	60800	78400	18300
7.9	11708	2.7	182	22.0	—	**GTN11 R4**	**BN160MR4**	—	—	—	85100	106000	32900
8.1	11773	1.6	177	18.0	**GTN10 L3**	—	**BN160MR4**	—	—	—	71400	89800	32600
8.1	11759	1.0	177	11.0	**GTN07 L3**	—	**BN160MR4**	**M4LC4**	26000	32600	59300	77700	22600
8.4	11352	2.9	171	18.0	**GTN11 L3**	—	**BN160MR4**	—	—	—	83400	103900	32200
8.7	10611	1.5	165	15.0	—	**GTN09 R4**	**BN160MR4**	—	—	—	59000	76100	17700
8.8	10870	2.0	164	18.0	**GTN10 L3**	—	**BN160MR4**	—	—	—	69700	87600	31800
8.9	10731	1.0	162	11.0	**GTN07 L3**	—	**BN160MR4**	**M4LC4**	25200	31600	57700	75600	21900
8.9	10731	1.5	162	11.0	**GTN09 L3**	—	**BN160MR4**	—	—	—	58600	75600	17500
8.9	10701	3.0	161	18.0	**GTN11 L3**	—	**BN160MR4**	—	—	—	82000	102100	31600
9.0	10303	2.1	160	15.0	—	**GTN10 R4**	**BN160MR4**	—	—	—	69300	87100	31600
9.1	10141	0.9	158	12.0	—	**GTN06 R4**	**BN160MR4**	**M4LC4**	22000	24900	52100	60700	16500
9.3	9918	2.7	154	22.0	—	**GTN11 R4**	**BN160MR4**	—	—	—	80900	100800	31200
9.5	9761	1.9	152	15.0	—	**GTN09 R4**	**BN160MR4**	—	—	—	57500	74200	17200
9.8	9743	2.8	147	40.0	—	**GTN11 R3**	**BN160MR4**	—	—	—	79700	99300	30600
9.8	9721	1.4	146	11.0	**GTN07 L3**	—	**BN160MR4**	**M4LC4**	24400	30600	56000	73300	21200
10.2	9416	2.2	142	18.0	**GTN10 L3**	—	**BN160MR4**	—	—	—	66700	83900	30300
10.4	9218	1.2	139	11.0	**GTN07 L3**	—	**BN160MR4**	**M4LC4**	24000	30100	55100	72200	20800
10.4	9218	1.7	139	11.0	**GTN09 L3**	—	**BN160MR4**	—	—	—	56000	72200	16700
10.6	8728	2.4	136	15.0	—	**GTN10 R4**	**BN160MR4**	—	—	—	65900	82900	29900
11.0	8662	2.4	130	18.0	**GTN10 L3**	—	**BN160MR4**	—	—	—	65100	81900	29500
11.4	8362	1.6	126	11.0	**GTN07 L3**	—	**BN160MR4**	**M4LC4**	23200	29100	53500	70100	20200
11.4	8362	2.0	126	11.0	**GTN09 L3**	—	**BN160MR4**	—	—	—	54400	70100	16100
11.6	7968	1.4	124	15.0	—	**GTN07 R4**	**BN160MR4**	**M4LC4**	24800	31100	56900	74500	21600
11.9	8056	1.0	121	7.5	**GTN06 L3**	—	**BN160MR4**	**M4LC4**	20600	23400	49200	57300	15500
12.0	7955	1.1	120	22.0	—	**GTN07 R3**	**BN160MR4**	**M4LC4**	22800	28600	52700	69100	19800
12.0	7955	1.6	120	22.0	—	**GTN09 R3**	**BN160MR4**	—	—	—	53600	69100	15900

P_1 = 11 kW

n_2 min^{-1}	M_2 Nm	S	i	Pt kW					Rn_2 [N] LK	LS	HK/MK	HS/MS	LSH
12.0	7955	2.2	120	22.0	—	GTN10 R3	BN160MR4	—	—	—	63500	79800	28600
12.1	7905	2.5	119	18.0	GTN10 L3	—	BN160MR4	—	—	—	63300	79600	28600
12.7	7525	1.4	113	11.0	GTN07 L3	—	BN160MR4	M4LC4	22400	28100	51800	67900	19500
12.7	7525	2.1	113	11.0	GTN09 L3	—	BN160MR4	—	—	—	52700	67900	15600
12.8	7462	1.0	112	7.5	GTN06 L3	—	BN160MR4	M4LC4	20100	22800	48100	56000	15100
13.0	7337	2.7	110	18.0	GTN10 L3	—	BN160MR4	—	—	—	61900	77900	27900
13.7	6749	2.0	105	15.0	—	GTN07 R4	BN160MR4	M4LC4	24100	30300	55400	72700	21000
13.8	6922	1.3	104	7.5	GTN06 L3	—	BN160MR4	M4LC4	19600	22200	47000	54700	14700
14.3	6696	2.8	101	18.0	GTN10 L3	—	BN160MR4	—	—	—	60300	75800	27000
14.4	6663	1.9	100	11.0	GTN07 L3	—	BN160MR4	M4LC4	21500	27000	50000	65500	18700
14.4	6663	2.5	100	11.0	GTN09 L3	—	BN160MR4	—	—	—	50800	65500	15000
14.5	6576	1.3	99.0	22.0	—	GTN07 R3	BN160MR4	M4LC4	21400	26900	49800	65200	18600
14.5	6576	1.9	99.0	22.0	—	GTN09 R3	BN160MR4	—	—	—	50600	65200	14900
14.5	6576	2.5	99.0	22.0	—	GTN10 R3	BN160MR4	—	—	—	59900	75400	26900
14.6	6544	1.0	98.5	14.0	—	GTN06 R3	BN160MR4	M4LC4	19200	21800	46200	53800	14400
15.5	6179	2.0	93.0	11.0	GTN07 L3	—	BN160MR4	M4LC4	21000	26300	48900	64000	18200
15.5	6179	2.4	93.0	11.0	GTN09 L3	—	BN160MR4	—	—	—	49600	64000	14600
16.3	5864	1.5	88.3	7.5	GTN06 L3	—	BN160MR4	M4LC4	18500	21000	44700	52100	13900
17.0	5629	1.3	84.7	14.0	—	GTN06 R3	BN160MR4	M4LC4	18300	20700	44200	51400	13700
17.3	5541	1.8	83.4	22.0	—	GTN07 R3	BN160MR4	M4LC4	20200	25400	47300	62000	17600
17.3	5541	2.5	83.4	22.0	—	GTN09 R3	BN160MR4	—	—	—	48000	62000	14100
17.3	5541	2.7	83.4	22.0	—	GTN10 R3	BN160MR4	—	—	—	56900	71600	25400
17.6	5437	1.3	81.9	7.5	GTN06 L3	—	BN160MR4	M4LC4	18100	20500	43700	50900	13600
17.9	5353	1.9	80.6	11.0	GTN07 L3	—	BN160MR4	M4LC4	20000	25100	46800	61300	17400
17.9	5353	2.8	80.6	11.0	GTN09 L3	—	BN160MR4	—	—	—	47600	61300	13900
18.3	5223	2.7	78.6	22.0	—	GTN10 R3	BN160MR4	—	—	—	55900	70300	24900
18.3	5223	2.1	78.6	22.0	—	GTN07 R3	BN160MR4	M4LC4	19800	24900	46500	60900	17200
18.6	5131	0.9	77.2	7.5	GTN05 L3	—	BN160MR4	M4LC4	13900	16100	25700	30900	8930
18.7	5115	1.6	77.0	7.5	GTN06 L3	—	BN160MR4	M4LC4	17700	20100	42900	50000	13300
19.4	4924	2.4	74.1	11.0	GTN07 L3	—	BN160MR4	M4LC4	19400	24400	45600	59800	16900
19.8	4842	1.5	72.9	14.0	—	GTN06 R3	BN160MR4	M4LC4	17400	19700	42200	49200	13100
19.9	4975	1.1	72.5	13.0	GTN06 L2	—	BN160MR4	M4LC4	17400	19700	42100	49100	13000
20.1	4766	2.1	71.8	22.0	—	GTN07 R3	BN160MR4	M4LC4	19200	24100	45200	59200	16700
20.1	4766	2.7	71.8	22.0	—	GTN09 R3	BN160MR4	—	—	—	45900	59200	13400
20.1	4766	2.7	71.8	22.0	—	GTN10 R3	BN160MR4	—	—	—	54400	68400	24100
21.3	4486	1.6	67.5	14.0	—	GTN06 R3	BN160MR4	M4LC4	17000	19200	41300	48000	12700
22.1	4333	1.7	65.2	7.5	GTN06 L3	—	BN160MR4	M4LC4	16800	19000	40800	47500	12600
22.2	4318	2.7	65.0	22.0	—	GTN10 R3	BN160MR4	—	—	—	52800	66400	23400
22.2	4318	2.5	65.0	22.0	—	GTN07 R3	BN160MR4	M4LC4	18600	23300	43900	57500	16200
22.2	4318	2.6	65.0	22.0	—	GTN09 R3	BN160MR4	—	—	—	44600	57500	12900
22.8	4190	1.0	63.1	14.0	—	GTN05 R3	—	M4LC4	13300	15400	24700	29700	8540
22.8	4189	1.1	63.1	7.5	GTN05 L3	—	BN160MR4	M4LC4	13300	15400	24700	29700	8540
23.8	4019	2.8	60.5	11.0	GTN07 L3	—	BN160MR4	M4LC4	18200	22800	42900	56300	15800
24.8	3859	2.0	58.1	14.0	—	GTN06 R3	BN160MR4	M4LC4	16100	18300	39400	45900	12100
25.6	3860	1.3	56.3	13.0	GTN06 L2	—	BN160MR4	M4LC4	16000	18100	39100	45500	12000
25.8	3714	2.7	55.9	22.0	—	GTN10 R3	BN160MR4	—	—	—	50500	63500	22200
25.8	3714	2.7	55.9	22.0	—	GTN07 R3	BN160MR4	M4LC4	17700	22200	41900	55000	15400
25.8	3714	2.7	55.9	22.0	—	GTN09 R3	BN160MR4	—	—	—	42600	55000	12300
25.8	3829	0.9	55.8	9.0	GTN05 L2	—	BN160MR4	M4LC4	12500	14400	23300	28100	8010
26.6	3599	1.0	54.2	14.0	—	GTN05 R3	—	M4LC4	12700	14600	23600	28400	8120
27.0	3548	0.9	53.4	7.5	GTN04 L3	—	BN160MR4	M4LC4	12600	14500	23500	28300	8080
27.0	3548	1.1	53.4	7.5	GTN05 L3	—	BN160MR4	M4LC4	12600	14500	23500	28300	8080
27.0	3537	2.0	53.2	7.5	GTN06 L3	—	BN160MR4	M4LC4	15700	17800	38400	44700	11800
28.6	3339	1.3	50.3	14.0	—	GTN05 R3	—	M4LC4	12300	14200	23100	27800	7920
31	3207	2.6	46.7	18.0	GTN07 L2	—	BN160MR4	M4LC4	16700	20900	39700	52100	14500
31	3096	1.4	46.6	14.0	—	GTN05 R3	—	M4LC4	12000	13900	22600	27200	7720
31	3191	2.0	46.5	13.0	GTN06 L2	—	BN160MR4	M4LC4	15000	17000	36900	43000	11300
31	3075	2.4	46.3	14.0	—	GTN06 R3	BN160MR4	M4LC4	15000	16900	36800	42900	11200
32	3063	1.2	44.6	9.0	GTN05 L2	—	BN160MR4	M4LC4	11900	13700	22300	26800	7610
32	2960	2.7	44.6	22.0	—	GTN10 R3	BN160MR4	—	—	—	47200	59300	20600
32	2960	2.7	44.6	22.0	—	GTN07 R3	BN160MR4	M4LC4	16400	20600	39200	51300	14300
32	2960	2.7	44.6	22.0	—	GTN09 R3	BN160MR4	—	—	—	39800	51300	11400
33	2896	1.1	43.6	7.5	GTN04 L3	—	BN160MR4	M4LC4	11800	13600	22100	26600	7550
34	2828	1.3	42.6	14.0	—	GTN05 R3	—	M4LC4	11700	13500	22000	26400	7490
37	2605	2.5	39.2	14.0	—	GTN06 R3	BN160MR4	M4LC4	14100	16000	35000	40800	10600
37	2638	2.5	38.4	13.0	GTN06 L2	—	BN160MR4	M4LC4	14100	15900	34800	40600	10600
38	2635	1.1	38.4	9.0	GTN04 L2	—	BN160MR4	M4LC4	11300	13000	21300	25600	7240

A

A

P_1 = 11 kW

n_2 min^{-1}	M_2 Nm	S	i	Pt kW					Rn_2 [N] LK	LS	HK/MK	HS/MS	LSH
38	2635	1.6	38.4	9.0	**GTN05 L2**	—	**BN160MR4**	**M4LC4**	11300	13000	21300	25600	7240
38	2507	2.7	37.7	22.0	—	**GTN10 R3**	**BN160MR4**	—	—	—	44900	56400	19500
38	2507	2.7	37.7	22.0	—	**GTN07 R3**	**BN160MR4**	**M4LC4**	15500	19500	37300	48800	13500
38	2507	2.7	37.7	22.0	—	**GTN09 R3**	**BN160MR4**	—	—	—	37900	48800	10800
39	2467	1.8	37.1	14.0	—	**GTN05 R3**	—	**M4LC4**	11200	12900	21100	25400	7160
40	2454	1.5	35.8	9.0	**GTN05 L2**	—	**BN160MR4**	**M4LC4**	11000	12700	20800	25100	7070
43	2206	2.6	33.2	14.0	—	**GTN06 R3**	**BN160MR4**	**M4LC4**	13400	15200	33300	38800	10100
46	2101	2.7	31.6	22.0	—	**GTN07 R3**	**BN160MR4**	**M4LC4**	14600	18400	35400	46300	12700
46	2101	2.7	31.6	22.0	—	**GTN09 R3**	**BN160MR4**	—	—	—	35900	46300	10200
46	2090	1.8	31.5	14.0	—	**GTN05 R3**	—	**M4LC4**	10600	12200	20100	24100	6770
47	2111	1.0	30.8	9.0	**GTN03 L2**	—	**BN160MR4**	**M4LC4**	10500	12100	19900	24000	6720
47	2111	1.3	30.8	9.0	**GTN04 L2**	—	**BN160MR4**	**M4LC4**	10500	12100	19900	24000	6720
47	2111	2.0	30.8	9.0	**GTN05 L2**	—	**BN160MR4**	**M4LC4**	10500	12100	19900	24000	6720
54	1814	1.0	26.4	9.0	**GTN03 L2**	—	**BN160MR4**	**M4LC4**	9960	11500	19000	22900	6390
54	1814	1.9	26.4	9.0	**GTN05 L2**	—	**BN160MR4**	**M4LC4**	9960	11500	19000	22900	6390
56	1706	2.1	25.7	14.0	—	**GTN05 R3**	—	**M4LC4**	9870	11400	18900	22700	6330
59	1683	1.3	24.5	9.0	**GTN03 L2**	—	**BN160MR4**	**M4LC4**	9720	11200	18600	22400	6230
59	1683	1.9	24.5	9.0	**GTN04 L2**	—	**BN160MR4**	**M4LC4**	9720	11200	18600	22400	6230
59	1683	2.3	24.5	9.0	**GTN05 L2**	—	**BN160MR4**	**M4LC4**	9720	11200	18600	22400	6230
63	1560	1.3	22.7	9.0	**GTN03 L2**	—	**BN160MR4**	**M4LC4**	9470	10900	18200	21900	6080
63	1560	1.8	22.7	9.0	**GTN04 L2**	—	**BN160MR4**	**M4LC4**	9470	10900	18200	21900	6080
63	1560	2.5	22.7	9.0	**GTN05 L2**	—	**BN160MR4**	**M4LC4**	9470	10900	18200	21900	6080
69	1425	1.3	20.8	9.0	**GTN03 L2**	—	**BN160MR4**	**M4LC4**	9190	10600	17700	21300	5900
69	1425	2.1	20.8	9.0	**GTN04 L2**	—	**BN160MR4**	**M4LC4**	9190	10600	17700	21300	5900
69	1425	2.3	20.8	9.0	**GTN05 L2**	—	**BN160MR4**	**M4LC4**	9190	10600	17700	21300	5900
72	1378	0.9	20.1	7.5	**GTN01 L2**	—	—	**M4LC4**	2890	2890	8410	9660	1900
75	1319	2.6	19.2	18.0	—	**GTN06 R2**	**BN160MR4**	**M4LC4**	11200	12600	28300	33000	8380
75	1319	1.2	19.2	18.0	—	**GTN03 R2**	—	**M4LC4**	8960	10300	17300	20800	5750
75	1319	2.2	19.2	18.0	—	**GTN05 R2**	—	**M4LC4**	8960	10300	17300	20800	5750
79	1247	1.1	18.2	7.5	**GTN01 L2**	—	—	**M4LC4**	2860	2860	8330	9580	1880
79	1243	1.6	18.1	9.0	**GTN03 L2**	—	**BN160MR4**	**M4LC4**	8780	10100	17000	20400	5630
79	1243	2.4	18.1	9.0	**GTN04 L2**	—	**BN160MR4**	**M4LC4**	8780	10100	17000	20400	5630
79	1243	2.9	18.1	9.0	**GTN05 L2**	—	**BN160MR4**	**M4LC4**	8780	10100	17000	20400	5630
86	1156	2.1	16.8	18.0	—	**GTN04 R2**	—	**M4LC4**	8570	9900	16600	20000	5500
91	1090	2.7	15.9	18.0	—	**GTN06 R2**	**BN160MR4**	**M4LC4**	10500	11900	26700	31100	7870
91	1090	1.7	15.9	18.0	—	**GTN03 R2**	—	**M4LC4**	8410	9710	16300	19700	5390
91	1090	2.7	15.9	18.0	—	**GTN05 R2**	—	**M4LC4**	8410	9710	16300	19700	5390
94	1053	1.6	15.3	9.0	**GTN03 L2**	—	**BN160MR4**	**M4LC4**	8310	9590	16200	19500	5330
94	1053	2.7	15.3	9.0	**GTN04 L2**	—	**BN160MR4**	**M4LC4**	8310	9590	16200	19500	5330
94	1053	2.9	15.3	9.0	**GTN05 L2**	—	**BN160MR4**	**M4LC4**	8310	9590	16200	19500	5330
97	1018	1.3	14.8	7.5	**GTN01 L2**	—	—	**M4LC4**	2670	2670	7840	9010	1760
98	1013	0.9	14.8	12.0	—	**GTN01 R2**	—	**M4LC4**	2610	2610	7670	8810	1710
105	938	2.7	13.7	18.0	—	**GTN06 R2**	**BN160MR4**	**M4LC4**	9960	11300	25500	29700	7480
105	938	2.1	13.7	18.0	—	**GTN03 R2**	—	**M4LC4**	8000	9230	15600	18800	5130
105	938	2.7	13.7	18.0	—	**GTN04 R2**	—	**M4LC4**	8000	9230	15600	18800	5130
105	938	2.7	13.7	18.0	—	**GTN05 R2**	—	**M4LC4**	8000	9230	15600	18800	5130
115	860	1.9	12.5	9.0	**GTN03 L2**	—	**BN160MR4**	**M4LC4**	7770	8970	15200	18300	4980
119	831	1.5	12.1	7.5	**GTN01 L2**	—	—	**M4LC4**	2500	2500	7380	8480	1640
122	812	1.4	11.8	12.0	—	**GTN01 R2**	—	**M4LC4**	2420	2420	7180	8240	1590
132	747	2.6	10.9	18.0	—	**GTN06 R2**	**BN160MR4**	**M4LC4**	9230	10500	23900	27800	6930
132	747	2.5	10.9	18.0	—	**GTN03 R2**	—	**M4LC4**	7410	8560	14600	17600	4760
132	747	2.6	10.9	18.0	—	**GTN04 R2**	—	**M4LC4**	7410	8560	14600	17600	4760
132	747	2.6	10.9	18.0	—	**GTN05 R2**	—	**M4LC4**	7410	8560	14600	17600	4760
149	684	1.1	9.67	11.0	**GTN03 L1**	—	**BN160MR4**	**M4LC4**	7120	8220	14100	16900	4570
156	633	2.7	9.23	18.0	—	**GTN06 R2**	**BN160MR4**	**M4LC4**	8730	9900	22700	26400	6560
156	633	2.7	9.23	18.0	—	**GTN03 R2**	—	**M4LC4**	7010	8100	13900	16700	4500
156	633	2.7	9.23	18.0	—	**GTN04 R2**	—	**M4LC4**	7010	8100	13900	16700	4500
156	633	2.7	9.23	18.0	—	**GTN05 R2**	—	**M4LC4**	7010	8100	13900	16700	4500
160	637	1.0	9.00	7.5	**GTN01 L1**	—	—	**M4LC4**	2260	2260	6750	7750	1490
165	600	1.0	8.74	11.0	—	**GTN00 R2**	—	**M4LC4**	6550	7560	13000	15700	4200
165	600	1.8	8.74	7.5	—	**GTN01 R2**	—	**M4LC4**	2100	2100	6310	7250	1380
192	531	2.3	7.50	11.0	**GTN03 L1**	—	**BN160MR4**	**M4LC4**	6400	7390	12800	15400	4100
200	510	1.5	7.20	7.5	**GTN01 L1**	—	—	**M4LC4**	2050	2050	6180	7100	1350
202	490	1.2	7.13	12.0	—	**GTN00 R2**	—	**M4LC4**	2090	2090	6300	7230	1380
202	490	2.1	7.13	12.0	—	**GTN01 R2**	—	**M4LC4**	2050	2050	6170	7080	1350
250	409	1.2	5.77	7.5	**GTN00 L1**	—	—	**M4LC4**	1950	1950	5910	6790	1280
250	409	2.3	5.77	7.5	**GTN01 L1**	—	—	**M4LC4**	1950	1950	5910	6790	1280

P_1 = 11 kW

n_2 min^{-1}	M_2 Nm	S	i	Pt kW					Rn_2 [N] LK	LS	HK/MK	HS/MS	LSH
338	302	1.6	4.26	7.5	**GTN00 L1**	—	—	**M4LC4**	1760	1760	5390	6200	1160
338	302	2.9	4.26	7.5	**GTN01 L1**	—	—	**M4LC4**	1760	1760	5390	6200	1160
414	246	1.9	3.48	7.5	**GTN00 L1**	—	—	**M4LC4**	1610	1610	4970	5710	1060

P_1 = 15 kW

n_2 min^{-1}	M_2 Nm	S	i	Pt kW					Rn_2 [N] LK	LS	HK/MK	HS/MS	LSH
0.77	163217	1.0	1893	18.0	**GTN17 L4**	—	**BN160L4**	—	—	—	442000	470000	150000
0.92	137526	1.2	1595	18.0	**GTN17 L4**	—	**BN160L4**	—	—	—	442000	470000	150000
1.1	113688	1.5	1318	18.0	**GTN17 L4**	—	**BN160L4**	—	—	—	434300	462400	147000
1.2	106719	1.1	1237	18.0	**GTN16 L4**	—	**BN160L4**	—	—	—	331400	368600	144000
1.3	97796	1.7	1134	18.0	**GTN17 L4**	—	**BN160L4**	—	—	—	415100	442000	139800
1.3	95233	1.0	1104	18.0	**GTN15 L4**	—	**BN160L4**	—	—	—	192600	226200	83200
1.4	89921	1.1	1043	18.0	**GTN15 L4**	—	**BN160L4**	—	—	—	189400	222300	81600
1.4	89921	1.5	1043	18.0	**GTN16 L4**	—	**BN160L4**	—	—	—	314800	350100	136000
1.4	89477	0.9	1038	15.0	**GTN14 L4**	—	**BN160L4**	—	—	—	189100	222000	81400
1.4	89028	2.0	1032	18.0	**GTN17 L4**	—	**BN160L4**	—	—	—	403600	429700	135500
1.5	82213	1.8	953	50.0	—	**GTN17 R4**	**BN160L4**	—	—	—	394100	419600	132000
1.6	80193	1.2	930	18.0	**GTN15 L4**	—	**BN160L4**	—	—	—	183000	214800	78500
1.6	79847	0.9	926	15.0	**GTN14 L4**	—	**BN160L4**	—	—	—	182700	214500	78400
1.6	78419	1.0	909	40.0	—	**GTN15 R4**	**BN160L4**	—	—	—	181700	213400	77900
1.6	77931	2.1	904	18.0	**GTN17 L4**	—	**BN160L4**	—	—	—	387800	412900	129600
1.7	74334	1.4	862	18.0	**GTN15 L4**	—	**BN160L4**	—	—	—	178800	210000	76600
1.7	74334	1.7	862	18.0	**GTN16 L4**	—	**BN160L4**	—	—	—	297400	330700	127600
1.7	73967	1.1	858	15.0	**GTN14 L4**	—	**BN160L4**	—	—	—	178600	209700	76400
1.8	70068	1.9	812	18.0	**GTN16 L4**	—	**BN160L4**	—	—	—	292100	324900	125100
1.8	69272	2.4	803	50.0	—	**GTN17 R4**	**BN160L4**	—	—	—	374300	398500	124600
1.8	68302	2.7	792	18.0	**GTN17 L4**	—	**BN160L4**	—	—	—	372700	396900	124100
1.9	67457	1.3	782	40.0	—	**GTN15 R4**	**BN160L4**	—	—	—	173700	203900	74100
2.0	63904	1.6	741	18.0	**GTN15 L4**	—	**BN160L4**	—	—	—	170900	200700	72800
2.0	63904	2.0	741	18.0	**GTN16 L4**	—	**BN160L4**	—	—	—	284200	316100	121400
2.0	63628	1.3	738	15.0	**GTN14 L4**	—	**BN160L4**	—	—	—	170700	200400	72700
2.0	62634	2.1	726	18.0	**GTN16 L4**	—	**BN160L4**	—	—	—	282500	314100	120500
2.0	62012	2.9	719	18.0	**GTN17 L4**	—	**BN160L4**	—	—	—	362100	385500	120100
2.1	59039	2.2	685	18.0	**GTN16 L4**	—	**BN160L4**	—	—	—	277500	308600	118200
2.2	58368	2.8	677	50.0	—	**GTN17 R4**	**BN160L4**	—	—	—	355600	378600	117700
2.2	57923	1.7	672	18.0	**GTN15 L4**	—	**BN160L4**	—	—	—	165900	194800	70500
2.2	57637	1.4	668	15.0	**GTN14 L4**	—	**BN160L4**	—	—	—	165700	194500	70300
2.2	56839	1.6	659	40.0	—	**GTN15 R4**	**BN160L4**	—	—	—	165000	193700	70000
2.3	55766	0.9	647	22.0	—	**GTN13 R4**	**BN160L4**	—	—	—	150500	178100	60400
2.3	54583	1.0	633	11.0	**GTN13 L4**	—	**BN160L4**	—	—	—	152700	180700	61400
2.3	53978	2.9	626	50.0	—	**GTN17 R4**	**BN160L4**	—	—	—	347300	369800	114700
2.3	53845	2.3	624	18.0	**GTN16 L4**	—	**BN160L4**	—	—	—	270000	300300	114600
2.3	53755	1.9	623	40.0	—	**GTN15 R4**	**BN160L4**	—	—	—	162300	190500	68700
2.3	53755	2.1	623	45.0	—	**GTN16 R4**	**BN160L4**	—	—	—	269800	300100	114500
2.4	52929	1.1	614	22.0	—	**GTN14 R4**	**BN160L4**	—	—	—	161500	189600	68400
2.5	50955	2.0	591	18.0	**GTN15 L4**	—	**BN160L4**	—	—	—	159700	187500	67500
2.5	50955	2.4	591	18.0	**GTN16 L4**	—	**BN160L4**	—	—	—	265500	295300	112500
2.5	50703	1.6	588	15.0	**GTN14 L4**	—	**BN160L4**	—	—	—	159500	187200	67400
2.6	48805	2.5	566	18.0	**GTN16 L4**	—	**BN160L4**	—	—	—	262100	291500	110900
2.6	48619	1.1	564	11.0	**GTN13 L4**	—	**BN160L4**	—	—	—	147500	174500	59100
2.6	47793	1.7	554	15.0	**GTN14 L4**	—	**BN160L4**	—	—	—	156600	183900	66100
2.7	46100	1.1	535	22.0	—	**GTN13 R4**	**BN160L4**	—	—	—	145100	171800	58000
2.7	46004	2.2	533	18.0	**GTN15 L4**	—	**BN160L4**	—	—	—	154900	181800	65200
2.7	46004	2.6	533	18.0	**GTN16 L4**	—	**BN160L4**	—	—	—	257500	286400	108700
2.8	45531	1.5	528	22.0	—	**GTN14 R4**	**BN160L4**	—	—	—	154400	181300	65000
2.8	45293	2.2	525	40.0	—	**GTN15 R4**	**BN160L4**	—	—	—	154100	181000	64900
2.8	45293	2.6	525	45.0	—	**GTN16 R4**	**BN160L4**	—	—	—	256300	285000	108200
2.8	44298	1.1	514	11.0	**GTN13 L4**	—	**BN160L4**	—	—	—	143400	169700	57300
2.9	44164	1.0	512	11.0	**GTN11 L4**	—	**BN160L4**	—	—	—	116000	144500	46500
2.9	42783	1.2	496	22.0	—	**GTN13 R4**	**BN160L4**	—	—	—	141900	168000	56600
3.0	42650	1.9	495	15.0	**GTN14 L4**	—	**BN160L4**	—	—	—	151400	177700	63600
3.0	41983	2.4	487	18.0	**GTN15 L4**	—	**BN160L4**	—	—	—	150700	176900	63300

A

A

P_1 = 15 kW

n_2 min^{-1}	M_2 Nm	S	i	Pt kW					Rn_2 [N] LK	LS	HK/MK	HS/MS	LSH
3.0	41983	2.8	487	18.0	**GTN16 L4**	—	**BN160L4**	—	—	—	250500	278600	105500
3.2	39509	2.0	458	15.0	**GTN14 L4**	—	**BN160L4**	—	—	—	148000	173700	62000
3.2	38957	1.4	452	11.0	**GTN13 L4**	—	**BN160L4**	—	—	—	138000	163300	54900
3.2	38843	1.2	450	22.0	—	**GTN13 R4**	**BN160L4**	—	—	—	137900	163200	54800
3.3	38364	1.8	445	22.0	—	**GTN14 R4**	**BN160L4**	—	—	—	146700	172200	61400
3.3	38030	2.6	441	18.0	**GTN15L4**	—	**BN160L4**	—	—	—	146300	171700	61200
3.3	37764	1.0	438	22.0	—	**GTN11 R4**	**BN160L4**	—	—	—	110600	137800	44100
3.5	36282	2.2	421	22.0	—	**GTN14 R4**	**BN160L4**	—	—	—	144200	169300	60300
3.5	35597	1.1	413	22.0	—	**GTN11 R4**	**BN160L4**	—	—	—	108700	135400	43300
3.6	35388	1.2	410	11.0	**GTN11 L4**	—	**BN160L4**	—	—	—	108500	135200	43200
3.6	35294	2.8	409	40.0	—	**GTN15 R4**	**BN160L4**	—	—	—	143000	167900	59700
3.7	33985	1.6	394	11.0	**GTN13 L4**	—	**BN160L4**	—	—	—	132500	156800	52400
3.8	33467	2.3	388	15.0	**GTN14 L4**	—	**BN160L4**	—	—	—	140800	165300	58700
3.8	33414	1.4	387	22.0	—	**GTN13 R4**	**BN160L4**	—	—	—	131800	156000	52100
4.1	30571	2.6	354	22.0	—	**GTN14 R4**	**BN160L4**	—	—	—	137000	160800	56900
4.1	30356	1.7	352	11.0	**GTN13 L4**	—	**BN160L4**	—	—	—	128000	151500	50500
4.2	29976	1.3	348	11.0	**GTN11 L4**	—	**BN160L4**	—	—	—	103200	128600	40900
4.2	29801	1.8	346	22.0	—	**GTN13 R4**	**BN160L4**	—	—	—	127300	150700	50200
4.3	29427	1.3	341	22.0	—	**GTN11 R4**	**BN160L4**	—	—	—	102700	127900	40600
4.4	28817	1.0	334	15.0	—	**GTN10 R4**	**BN160L4**	—	—	—	84600	106300	39400
4.5	27738	1.4	322	22.0	—	**GTN11 R4**	**BN160L4**	—	—	—	100900	125600	39800
4.6	27083	2.9	314	15.0	**GTN14 L4**	—	**BN160L4**	—	—	—	132100	155100	54700
4.7	26627	1.7	309	22.0	—	**GTN13 R4**	**BN160L4**	—	—	—	123100	145700	48300
4.8	27088	1.4	304	18.0	**GTN13 L3**	—	**BN160L4**	—	—	—	122500	145000	48100
5.0	25313	1.5	294	22.0	—	**GTN11 R4**	**BN160L4**	—	—	—	98100	122200	38600
5.0	25966	1.0	291	18.0	**GTN11 L3**	—	**BN160L4**	—	—	—	97900	121900	38500
5.2	24409	1.1	283	15.0	—	**GTN10 R4**	**BN160L4**	—	—	—	82100	103300	38100
5.2	24244	2.0	281	22.0	—	**GTN13 R4**	**BN160L4**	—	—	—	119700	141700	46800
5.5	22930	1.6	266	22.0	—	**GTN11 R4**	**BN160L4**	—	—	—	95300	118700	37400
5.7	22276	1.0	258	15.0	—	**GTN10 R4**	**BN160L4**	—	—	—	79900	100500	37000
5.8	22504	2.0	252	18.0	**GTN13 L3**	—	**BN160L4**	—	—	—	115900	137100	45200
6.0	21879	1.6	245	18.0	**GTN11 L3**	—	**BN160L4**	—	—	—	93000	115800	36400
6.1	21360	2.4	240	25.0	**GTN14 L3**	—	**BN160L4**	—	—	—	119300	140100	48800
6.2	20428	2.0	237	22.0	—	**GTN13 R4**	**BN160L4**	—	—	—	113700	134600	44200
6.2	20178	1.2	234	15.0	—	**GTN10 R4**	**BN160L4**	—	—	—	77600	97600	35800
6.3	20522	1.0	230	18.0	**GTN10 L3**	—	**BN160L4**	—	—	—	77200	97100	35600
6.4	19725	1.8	229	22.0	—	**GTN11 R4**	**BN160L4**	—	—	—	91100	113400	35500
7.0	18603	2.4	209	18.0	**GTN13 L3**	—	**BN160L4**	—	—	—	109400	129500	42400
7.1	17751	1.2	206	15.0	—	**GTN10 R4**	**BN160L4**	—	—	—	74700	93900	34300
7.1	17733	1.1	206	15.0	—	**GTN09 R4**	**BN160L4**	—	—	—	63000	81200	19000
7.2	18087	1.8	203	18.0	**GTN11 L3**	—	**BN160L4**	—	—	—	87800	109400	34100
7.2	17997	1.2	202	18.0	**GTN10 L3**	—	**BN160L4**	—	—	—	74200	93300	34100
7.2	17979	0.9	202	11.0	**GTN09 L3**	—	**BN160L4**	—	—	—	61300	79100	18400
7.3	17304	2.0	201	22.0	—	**GTN13 R4**	**BN160L4**	—	—	—	108200	128000	41900
7.4	17087	2.0	198	22.0	—	**GTN11 R4**	**BN160L4**	—	—	—	87200	108600	33900
7.5	17265	2.8	194	18.0	**GTN13 L3**	—	**BN160L4**	—	—	—	107000	126700	41400
7.6	17049	1.9	191	18.0	**GTN11 L3**	—	**BN160L4**	—	—	—	86300	107500	33500
7.7	16444	1.1	191	15.0	—	**GTN09 R4**	**BN160L4**	—	—	—	61600	79400	18500
7.7	16329	1.4	189	15.0	—	**GTN10 R4**	**BN160L4**	—	—	—	72800	91500	33400
7.9	15918	2.0	185	22.0	—	**GTN13 R4**	**BN160L4**	—	—	—	105500	124900	40700
8.0	15718	2.0	182	22.0	—	**GTN11 R4**	**BN160L4**	—	—	—	85100	106000	32900
8.0	16231	2.4	182	18.0	**GTN13 L3**	—	**BN160L4**	—	—	—	105100	124300	40500
8.2	15805	1.2	177	18.0	**GTN10 L3**	—	**BN160L4**	—	—	—	71400	89800	32600
8.3	15675	2.9	176	18.0	**GTN13 L3**	—	**BN160L4**	—	—	—	104000	123000	40100
8.5	15240	2.1	171	18.0	**GTN11 L3**	—	**BN160L4**	—	—	—	83400	103900	32200
8.8	14245	1.1	165	15.0	—	**GTN09 R4**	**BN160L4**	—	—	—	59000	76100	17700
8.9	14593	1.5	164	18.0	**GTN10 L3**	—	**BN160L4**	—	—	—	69700	87600	31800
9.0	14406	1.1	162	11.0	**GTN09 L3**	—	**BN160L4**	—	—	—	58600	75600	17500
9.1	14365	2.2	161	18.0	**GTN11 L3**	—	**BN160L4**	—	—	—	82000	102100	31600
9.1	13832	1.6	160	15.0	—	**GTN10 R4**	**BN160L4**	—	—	—	69300	87100	31600
9.5	13314	2.0	154	22.0	—	**GTN11 R4**	**BN160L4**	—	—	—	80900	100800	31200
9.5	13645	2.9	153	40.0	—	**GTN13 R3**	**BN160L4**	—	—	—	99700	118000	38200
9.6	13104	1.4	152	15.0	—	**GTN09 R4**	**BN160L4**	—	—	—	57500	74200	17200
9.9	13109	2.4	147	18.0	**GTN11 L3**	—	**BN160L4**	—	—	—	79700	99300	30700
10.0	13079	2.1	147	40.0	—	**GTN11 R3**	**BN160L4**	—	—	—	79700	99300	30600
10.0	13050	1.0	146	11.0	**GTN07 L3**	—	**BN160L4**	—	24400	30600	56000	73300	21200
10.3	12641	1.6	142	18.0	**GTN10 L3**	—	**BN160L4**	—	—	—	66700	83900	30300

P_1 = 15 kW

n_2 min^{-1}	M_2 Nm	S	i	Pt kW					Rn_2 [N] LK	LS	HK/MK	HS/MS	LSH
10.5	12375	1.3	139	11.0	**GTN09 L3**	—	**BN160L4**	—	—	—	56000	72200	16700
10.7	11716	1.8	136	15.0	—	**GTN10 R4**	**BN160L4**	—	—	—	65900	82900	29900
11.0	11875	2.5	133	18.0	**GTN11 L3**	—	**BN160L4**	—	—	—	77400	96400	29700
11.2	11629	1.8	130	18.0	**GTN10 L3**	—	**BN160L4**	—	—	—	65100	81900	29500
11.6	11225	1.2	126	11.0	**GTN07 L3**	—	**BN160L4**	—	23200	29100	53500	70100	20200
11.6	11225	1.5	126	11.0	**GTN09 L3**	—	**BN160L4**	—	—	—	54400	70100	16100
11.6	11194	2.6	126	18.0	**GTN11 L3**	—	**BN160L4**	—	—	—	76100	94700	29100
11.8	10697	1.0	124	15.0	—	**GTN07 R4**	**BN160L4**	—	24800	31100	56900	74500	21600
11.8	11021	2.7	124	40.0	—	**GTN11 R3**	**BN160L4**	—	—	—	75700	94300	28900
12.2	10679	1.2	120	22.0	—	**GTN09 R3**	**BN160L4**	—	—	—	53600	69100	15900
12.2	10679	1.6	120	22.0	—	**GTN10 R3**	**BN160L4**	—	—	—	63500	79800	28600
12.3	10612	1.9	119	18.0	**GTN10 L3**	—	**BN160L4**	—	—	—	63300	79600	28600
12.7	10215	2.8	115	18.0	**GTN11 L3**	—	**BN160L4**	—	—	—	74000	92200	28200
12.9	10102	1.0	113	11.0	**GTN07 L3**	—	**BN160L4**	—	22400	28100	51800	67900	19500
12.9	10102	1.5	113	11.0	**GTN09 L3**	—	**BN160L4**	—	—	—	52700	67900	15600
13.2	9850	2.0	110	18.0	**GTN10 L3**	—	**BN160L4**	—	—	—	61900	77900	27900
13.9	9061	1.5	105	15.0	—	**GTN07 R4**	**BN160L4**	—	24100	30300	55400	72700	21000
14.0	9293	1.0	104	7.5	**GTN06 L3**	—	**BN160L4**	—	19200	21700	46000	53600	14400
14.5	8989	2.1	101	18.0	**GTN10 L3**	—	**BN160L4**	—	—	—	60300	75800	27000
14.6	8945	1.4	100	11.0	**GTN07 L3**	—	**BN160L4**	—	21500	27000	50000	65500	18700
14.6	8945	1.8	100	11.0	**GTN09 L3**	—	**BN160L4**	—	—	—	50800	65500	15000
14.7	8828	1.0	99.0	22.0	—	**GTN07 R3**	**BN160L4**	—	21400	26900	49800	65200	18600
14.7	8828	1.4	99.0	22.0	—	**GTN09 R3**	**BN160L4**	—	—	—	50600	65200	14900
14.7	8828	1.9	99.0	22.0	—	**GTN10 R3**	**BN160L4**	—	—	—	59900	75400	26900
15.7	8295	1.5	93.0	11.0	**GTN07 L3**	—	**BN160L4**	—	21000	26300	48900	64000	18200
15.7	8295	1.8	93.0	11.0	**GTN09 L3**	—	**BN160L4**	—	—	—	49600	64000	14600
16.0	8143	2.3	91.3	18.0	**GTN10 L3**	—	**BN160L4**	—	—	—	58500	73600	26200
16.5	7872	1.1	88.3	7.5	**GTN06 L3**	—	**BN160L4**	—	18100	20500	43800	51000	13600
17.2	7557	1.0	84.7	14.0	—	**GTN06 R3**	**BN160L4**	—	18300	20700	44200	51400	13700
17.5	7438	1.4	83.4	22.0	—	**GTN07 R3**	**BN160L4**	—	20200	25400	47300	62000	17600
17.5	7438	1.9	83.4	22.0	—	**GTN09 R3**	**BN160L4**	—	—	—	48000	62000	14100
17.5	7438	2.0	83.4	22.0	—	**GTN10 R3**	**BN160L4**	—	—	—	56900	71600	25400
17.8	7300	0.9	81.9	7.5	**GTN06L3**	—	**BN160L4**	—	17700	20000	42800	49900	13300
18.1	7186	1.4	80.6	11.0	**GTN07 L3**	—	**BN160L4**	—	20000	25100	46800	61300	17400
18.1	7186	2.1	80.6	11.0	**GTN09 L3**	—	**BN160L4**	—	—	—	47600	61300	13900
18.2	7163	2.4	80.3	18.0	**GTN10 L3**	—	**BN160L4**	—	—	—	56300	70800	25100
18.6	7012	2.0	78.6	22.0	—	**GTN10 R3**	**BN160L4**	—	—	—	55900	70300	24900
18.6	7012	1.6	78.6	22.0	—	**GTN07 R3**	**BN160L4**	—	19800	24900	46500	60900	17200
19.0	6867	1.2	77.0	7.5	**GTN06 L3**	—	**BN160L4**	—	17700	20100	42900	50000	13300
19.7	6610	1.8	74.1	11.0	**GTN07 L3**	—	**BN160L4**	—	19400	24400	45600	59800	16900
19.7	6610	2.3	74.1	11.0	**GTN09 L3**	—	**BN160L4**	—	—	—	46400	59800	13500
19.8	6590	2.7	73.9	18.0	**GTN10 L3**	—	**BN160L4**	—	—	—	54900	69000	24400
20.0	6500	1.1	72.9	14.0	—	**GTN06 R3**	**BN160L4**	—	17400	19700	42200	49200	13100
20.3	6399	1.6	71.8	22.0	—	**GTN07 R3**	**BN160L4**	—	19200	24100	45200	59200	16700
20.3	6399	2.0	71.8	22.0	—	**GTN09 R3**	**BN160L4**	—	—	—	45900	59200	13400
20.3	6399	2.0	71.8	22.0	—	**GTN10 R3**	**BN160L4**	—	—	—	54400	68400	24100
21.6	6022	1.2	67.5	14.0	—	**GTN06 R3**	**BN160L4**	—	17000	19200	41300	48000	12700
22.4	5817	1.3	65.2	7.5	**GTN06 L3**	—	**BN160L4**	—	16800	19000	40800	47500	12600
22.5	5796	2.0	65.0	22.0	—	**GTN10 R3**	**BN160L4**	—	—	—	52800	66400	23400
22.5	5796	1.9	65.0	22.0	—	**GTN07 R3**	**BN160L4**	—	18600	23300	43900	57500	16200
22.5	5796	1.9	65.0	22.0	—	**GTN09 R3**	**BN160L4**	—	—	—	44600	57500	12900
23.3	5582	3.0	62.6	18.0	**GTN10 L3**	—	**BN160L4**	—	—	—	52200	65700	23100
24.1	5396	2.1	60.5	11.0	**GTN07 L3**	—	**BN160L4**	—	18200	22800	42900	56300	15800
24.1	5396	2.6	60.5	11.0	**GTN09 L3**	—	**BN160L4**	—	—	—	43600	56300	12600
25.1	5180	1.5	58.1	14.0	—	**GTN06 R3**	**BN160L4**	—	16100	18300	39400	45900	12100
26.0	5182	1.0	56.3	13.0	**GTN06 L2**	—	**BN160L4**	**M5SB4**	16000	18100	39100	45500	12000
26.1	4986	2.0	55.9	22.0	—	**GTN10 R3**	**BN160L4**	—	—	—	50500	63500	22200
26.1	4986	2.0	55.9	22.0	—	**GTN07 R3**	**BN160L4**	—	17700	22200	41900	55000	15400
26.1	4986	2.0	55.9	22.0	—	**GTN09 R3**	**BN160L4**	—	—	—	42600	55000	12300
27.4	4748	1.5	53.2	7.5	**GTN06 L3**	—	**BN160L4**	—	15700	17800	38400	44700	11800
28.5	4571	2.3	51.3	11.0	**GTN07 L3**	—	**BN160L4**	—	17200	21600	40900	53500	14900
28.5	4571	2.9	51.3	11.0	**GTN09 L3**	—	**BN160L4**	—	—	—	41500	53500	12000
31	4305	1.9	46.7	18.0	**GTN07 L2**	—	**BN160L4**	**M5SB4**	16700	20900	39700	52100	14500
31	4305	2.9	46.7	18.0	**GTN09 L2**	—	**BN160L4**	—	—	—	40400	52100	11600
31	4284	1.5	46.5	13.0	**GTN06 L2**	—	**BN160L4**	**M5SB4**	15000	17000	36900	43000	11300
32	4128	1.8	46.3	14.0	—	**GTN06 R3**	**BN160L4**	—	15000	16900	36800	42900	11200
33	3973	2.0	44.6	22.0	—	**GTN10 R3**	**BN160L4**	—	—	—	47200	59300	20600

A

A

P_1 = 15 kW

n_2 min^{-1}	M_2 Nm	S	i	Pt kW					Rn_2 [N] LK	LS	HK/MK	HS/MS	LSH
33	3973	2.0	44.6	22.0	—	**GTN07 R3**	**BN160L4**	—	16400	20600	39200	51300	14300
33	3973	2.0	44.6	22.0	—	**GTN09 R3**	**BN160L4**	—	—	—	39800	51300	11400
37	3497	1.9	39.2	14.0	—	**GTN06 R3**	**BN160L4**	—	14100	16000	35000	40800	10600
38	3559	2.3	38.6	18.0	**GTN07 L2**	—	**BN160L4**	**M5SB4**	15600	19600	37500	49200	13600
38	3541	1.8	38.4	13.0	**GTN06 L2**	—	**BN160L4**	**M5SB4**	14100	15900	34800	40600	10600
38	3537	1.2	38.4	9.0	**GTN05 L2**	—	**BN160L4**	—	11300	13000	21300	25600	7240
39	3366	2.0	37.7	22.0	—	**GTN10 R3**	**BN160L4**	—	—	—	44900	56400	19500
39	3366	2.0	37.7	22.0	—	**GTN07 R3**	**BN160L4**	—	—	—	37900	48800	10800
39	3366	2.0	37.7	22.0	—	**GTN09 R3**	**BN160L4**	—	15500	19500	37300	48800	13500
41	3295	1.1	35.8	9.0	**GTN05 L2**	—	**BN160L4**	—	11000	12700	20800	25100	7070
44	2962	2.0	33.2	14.0	—	**GTN06 R3**	**BN160L4**	—	13400	15200	33300	38800	10100
44	3046	2.3	33.1	13.0	**GTN06 L2**	—	**BN160L4**	**M5SB4**	13400	15100	33300	38800	10000
46	2821	2.0	31.6	22.0	—	**GTN07 R3**	**BN160L4**	—	14600	18400	35400	46300	12700
46	2821	2.0	31.6	22.0	—	**GTN09 R3**	**BN160L4**	—	—	—	35900	46300	10200
47	2834	1.0	30.8	9.0	**GTN04 L2**	—	**BN160L4**	—	10500	12100	19900	24000	6720
47	2834	1.5	30.8	9.0	**GTN05 L2**	—	**BN160L4**	—	10500	12100	19900	24000	6720
51	2620	2.6	28.4	13.0	**GTN06 L2**	—	**BN160L4**	**M5SB4**	12700	14400	31800	37100	9550
55	2435	1.4	26.4	9.0	**GTN05 L2**	—	**BN160L4**	—	9960	11500	19000	22900	6390
55	2427	2.6	26.4	13.0	**GTN06 L2**	—	**BN160L4**	**M5SB4**	12400	14000	31100	36200	9310
60	2259	1.0	24.5	9.0	**GTN03 L2**	—	**BN160L4**	—	9490	11000	18200	21900	6090
60	2259	1.4	24.5	9.0	**GTN04 L2**	—	**BN160L4**	—	9720	11200	18600	22400	6230
60	2259	1.7	24.5	9.0	**GTN05 L2**	—	**BN160L4**	—	9720	11200	18600	22400	6230
64	2095	1.0	22.7	9.0	**GTN03 L2**	—	**BN160L4**	—	9470	10900	18200	21900	6080
64	2095	1.3	22.7	9.0	**GTN04L2**	—	**BN160L4**	—	9470	10900	18200	21900	6080
64	2095	1.9	22.7	9.0	**GTN05 L2**	—	**BN160L4**	—	9470	10900	18200	21900	6080
64	2088	2.9	22.7	13.0	**GTN06 L2**	—	**BN160L4**	**M5SB4**	11800	13400	29700	34600	8850
70	1913	1.0	20.8	9.0	**GTN03 L2**	—	**BN160L4**	—	8980	10400	17300	20900	5760
70	1913	1.5	20.8	9.0	**GTN04 L2**	—	**BN160L4**	—	9190	10600	17700	21300	5900
70	1913	1.7	20.8	9.0	**GTN05 L2**	—	**BN160L4**	—	9190	10600	17700	21300	5900
76	1771	2.0	19.2	18.0	—	**GTN06 R2**	**BN160L4**	—	11200	12600	28300	33000	8380
81	1669	1.2	18.1	9.0	**GTN03 L2**	—	**BN160L4**	—	8780	10100	17000	20400	5630
81	1669	1.8	18.1	9.0	**GTN04 L2**	—	**BN160L4**	—	8780	10100	17000	20400	5630
81	1669	2.2	18.1	9.0	**GTN05 L2**	—	**BN160L4**	—	8780	10100	17000	20400	5630
92	1464	2.0	15.9	18.0	—	**GTN06 R2**	**BN160L4**	—	10500	11900	26700	31100	7870
95	1414	1.2	15.3	9.0	**GTN03 L2**	—	**BN160L4**	—	8310	9590	16200	19500	5330
95	1414	2.0	15.3	9.0	**GTN04 L2**	—	**BN160L4**	—	8310	9590	16200	19500	5330
95	1414	2.2	15.3	9.0	**GTN05 L2**	—	**BN160L4**	—	8310	9590	16200	19500	5330
107	1259	2.0	13.7	18.0	—	**GTN06 R2**	**BN160L4**	—	9960	11300	25500	29700	7480
117	1154	1.4	12.5	9.0	**GTN03 L2**	—	**BN160L4**	—	7770	8970	15200	18300	4980
117	1154	2.3	12.5	9.0	**GTN04 L2**	—	**BN160L4**	—	7770	8970	15200	18300	4980
117	1154	2.5	12.5	9.0	**GTN05 L2**	—	**BN160L4**	—	7770	8970	15200	18300	4980
134	1003	2.0	10.9	18.0	—	**GTN06 R2**	**BN160L4**	—	9230	10500	23900	27800	6930
158	850	2.0	9.23	18.0	—	**GTN06 R2**	**BN160L4**	—	8730	9900	22700	26400	6560
195	713	1.7	7.50	11.0	**GTN03 L1**	—	**BN160L4**	**M5SB4**	6550	7560	13000	15700	4200
222	625	3.0	6.57	12.0	**GTN04 L1**	—	**BN160L4**	**M5SB4**	6260	7230	12500	15100	4020
235	589	2.4	6.20	11.0	**GTN03 L1**	—	**BN160L4**	**M5SB4**	6140	7090	12300	14800	3940
274	507	2.9	5.33	11.0	**GTN03 L1**	—	**BN160L4**	**M5SB4**	5840	6750	11800	14200	3750

P_1 = 18.5 kW

n_2 min^{-1}	M_2 Nm	S	i	Pt kW					Rn_2 [N] LK	LS	HK/MK	HS/MS	LSH
0.92	169802	1.0	1595	18.0	**GTN17 L4**	—	**BN180M4**	—	—	—	442000	470000	150000
1.1	147863	2.4	1389	30.0	**GTN19 L4**	—	**BN180M4**	—	—	—	636100	700800	199500
1.1	140370	1.2	1318	18.0	**GTN17 L4**	—	**BN180M4**	—	—	—	434300	462400	147000
1.2	131765	0.9	1237	18.0	**GTN16 L4**	—	**BN180M4**	—	—	—	331400	368600	144000
1.2	127194	2.8	1195	30.0	**GTN19 L4**	—	**BN180M4**	—	—	—	608000	669900	189700
1.3	120748	1.4	1134	18.0	**GTN17 L4**	—	**BN180M4**	—	—	—	415100	442000	139800
1.4	112771	2.4	1059	22.0	**GTN18 L4**	—	**BN180M4**	—	—	—	503000	520700	182200
1.4	111025	0.9	1043	18.0	**GTN15 L4**	—	**BN180M4**	—	—	—	189400	222300	81600
1.4	111025	1.2	1043	18.0	**GTN16 L4**	—	**BN180M4**	—	—	—	314800	350100	136000
1.4	109922	1.6	1032	18.0	**GTN17 L4**	—	**BN180M4**	—	—	—	403600	429700	135500
1.5	101508	1.4	953	50.0	—	**GTN17 R4**	**BN180M4**	—	—	—	394100	419600	132000
1.6	99014	0.9	930	18.0	**GTN15 L4**	—	**BN180M4**	—	—	—	183000	214800	78500

P_1 = 18.5 kW

n_2 min^{-1}	M_2 Nm	S	i	Pt kW					Rn_2 [N] LK	LS	HK/MK	HS/MS	LSH
1.6	97007	2.8	911	22.0	GTN18 L4	—	BN180M4	—	—	—	487700	497700	173300
1.6	96221	1.7	904	18.0	GTN17 L4	—	BN180M4	—	—	—	387800	412900	129600
1.7	91780	1.1	862	18.0	GTN15 L4	—	BN180M4	—	—	—	178800	210000	76600
1.7	91780	1.4	862	18.0	GTN16 L4	—	BN180M4	—	—	—	297400	330700	127600
1.8	86513	1.5	812	18.0	GTN16 L4	—	BN180M4	—	—	—	292100	324900	125100
1.8	85530	1.9	803	50.0	—	GTN17 R4	BN180M4	—	—	—	374300	398500	124600
1.8	84332	2.2	792	18.0	GTN17 L4	—	BN180M4	—	—	—	372700	396900	124100
1.9	83289	1.1	782	40.0	—	GTN15 R4	BN180M4	—	—	—	173700	203900	74100
2.0	78901	1.3	741	18.0	GTN15 L4	—	BN180M4	—	—	—	170900	200700	72800
2.0	78901	1.6	741	18.0	GTN16 L4	—	BN180M4	—	—	—	284200	316100	121400
2.0	78561	1.0	738	15.0	GTN14 L4	—	BN180M4	—	—	—	170700	200400	72700
2.0	77333	1.7	726	18.0	GTN16 L4	—	BN180M4	—	—	—	282500	314100	120500
2.0	76565	2.3	719	18.0	GTN17 L4	—	BN180M4	—	—	—	362100	385500	120100
2.1	72895	1.8	685	18.0	GTN16 L4	—	BN180M4	—	—	—	277500	308600	118200
2.2	72067	2.3	677	50.0	—	GTN17 R4	BN180M4	—	—	—	355600	378600	117700
2.2	71517	1.4	672	18.0	GTN15 L4	—	BN180M4	—	—	—	165900	194800	70500
2.2	71164	1.1	668	15.0	GTN14 L4	—	BN180M4	—	—	—	165700	194500	70300
2.2	70179	1.3	659	40.0	—	GTN15 R4	BN180M4	—	—	—	165000	193700	70000
2.3	66647	2.3	626	50.0	—	GTN17 R4	BN180M4	—	—	—	347300	369800	114700
2.3	66482	1.9	624	18.0	GTN16 L4	—	BN180M4	—	—	—	270000	300300	114600
2.3	66371	1.5	623	40.0	—	GTN15 R4	BN180M4	—	—	—	162300	190500	68700
2.3	66371	1.7	623	45.0	—	GTN16 R4	BN180M4	—	—	—	269800	300100	114500
2.4	65863	2.7	619	18.0	GTN17 L4	—	BN180M4	—	—	—	346100	368500	114200
2.5	62914	1.6	591	18.0	GTN15 L4	—	BN180M4	—	—	—	159700	187500	67500
2.5	62914	1.9	591	18.0	GTN16 L4	—	BN180M4	—	—	—	265500	295300	112500
2.5	62603	1.3	588	15.0	GTN14 L4	—	BN180M4	—	—	—	159500	187200	67400
2.6	60260	2.1	566	18.0	GTN16 L4	—	BN180M4	—	—	—	262100	291500	110900
2.6	59010	1.4	554	15.0	GTN14 L4	—	BN180M4	—	—	—	156600	183900	66100
2.6	58741	3.0	552	18.0	GTN17 L4	—	BN180M4	—	—	—	334400	356100	110000
2.7	56801	1.8	533	18.0	GTN15 L4	—	BN180M4	—	—	—	154900	181800	65200
2.7	56801	2.1	533	18.0	GTN16 L4	—	BN180M4	—	—	—	257500	286400	108700
2.8	55924	1.8	525	40.0	—	GTN15 R4	BN180M4	—	—	—	154100	181000	64900
2.8	55924	2.1	525	45.0	—	GTN16 R4	BN180M4	—	—	—	256300	285000	108200
2.8	55368	3.0	520	50.0	—	GTN17 R4	BN180M4	—	—	—	328500	349800	107800
3.0	52659	1.5	495	15.0	GTN14 L4	—	BN180M4	—	—	—	151400	177700	63600
3.0	51836	1.9	487	18.0	GTN15 L4	—	BN180M4	—	—	—	150700	176900	63300
3.0	51836	2.3	487	18.0	GTN16 L4	—	BN180M4	—	—	—	250500	278600	105500
3.2	48782	1.6	458	15.0	GTN14 L4	—	BN180M4	—	—	—	148000	173700	62000
3.3	47121	2.5	443	45.0	—	GTN16 R4	BN180M4	—	—	—	243500	270800	102200
3.3	46956	2.1	441	18.0	GTN15 L4	—	BN180M4	—	—	—	146300	171700	61200
3.3	46956	2.5	441	18.0	GTN16 L4	—	BN180M4	—	—	—	243200	270500	102100
3.6	43577	2.3	409	40.0	—	GTN15 R4	BN180M4	—	—	—	143000	167900	59700
3.6	43577	2.6	409	45.0	—	GTN16 R4	BN180M4	—	—	—	237800	264500	99600
3.8	41321	1.9	388	15.0	GTN14 L4	—	BN180M4	—	—	—	140800	165300	58700
4.0	39353	2.5	370	18.0	GTN15 L4	—	BN180M4	—	—	—	138700	162900	57700
4.0	39353	2.8	370	18.0	GTN16 L4	—	BN180M4	—	—	—	230600	256500	96200
4.2	36717	2.6	345	40.0	—	GTN15 R4	BN180M4	—	—	—	135900	159500	56400
4.2	36717	2.9	345	45.0	—	GTN16 R4	BN180M4	—	—	—	225900	251200	94000
4.6	33439	2.3	314	15.0	GTN14 L4	—	BN180M4	—	—	—	132100	155100	54700
4.8	33446	1.2	304	18.0	GTN13 L3	—	BN180M4	—	—	—	122500	145000	48100
5.4	28611	2.9	269	40.0	—	GTN15 R4	BN180M4	—	—	—	126100	148000	51900
5.8	27786	1.6	252	50.0	GTN13 L3	—	BN180M4	—	—	—	267500	284800	85800
6.0	27014	1.3	245	18.0	GTN11 L3	—	BN180M4	—	—	—	93000	115800	36400
6.1	26503	2.5	241	30.0	GTN15 L3	—	BN180M4	—	—	—	122000	143200	50000
6.1	26373	2.0	240	25.0	GTN14 L3	—	BN180M4	—	—	—	121800	143000	50000
7.0	22970	2.0	209	18.0	GTN13 L3	—	BN180M4	—	—	—	109400	129500	42400
7.1	22686	2.8	206	25.0	GTN14 L3	—	BN180M4	—	—	—	116400	136700	47500
7.2	22332	1.5	203	18.0	GTN11 L3	—	BN180M4	—	—	—	87800	109400	34100
7.2	22221	1.0	202	18.0	GTN10 L3	—	BN180M4	—	—	—	74200	93300	34100
7.5	21317	2.2	194	18.0	GTN13 L3	—	BN180M4	—	—	—	107000	126700	41400
7.6	21050	1.5	191	18.0	GTN11 L3	—	BN180M4	—	—	—	86300	107500	33500
8.0	20040	1.9	182	18.0	GTN13 L3	—	BN180M4	—	—	—	105100	124300	40500
8.2	19515	0.9	177	18.0	GTN10 L3	—	BN180M4	—	—	—	71400	89800	32600
8.3	19354	2.3	176	18.0	GTN13 L3	—	BN180M4	—	—	—	104000	123000	40100
8.5	18816	1.7	171	18.0	GTN11 L3	—	BN180M4	—	—	—	83400	103900	32200
8.9	18018	1.2	164	18.0	GTN10 L3	—	BN180M4	—	—	—	69700	87600	31800
9.0	17962	2.6	163	18.0	GTN13 L3	—	BN180M4	—	—	—	101700	120300	39100

A

B GEARBOX SELECTION BY APPLICATION TORQUE

B 根据应用扭矩选择齿轮箱

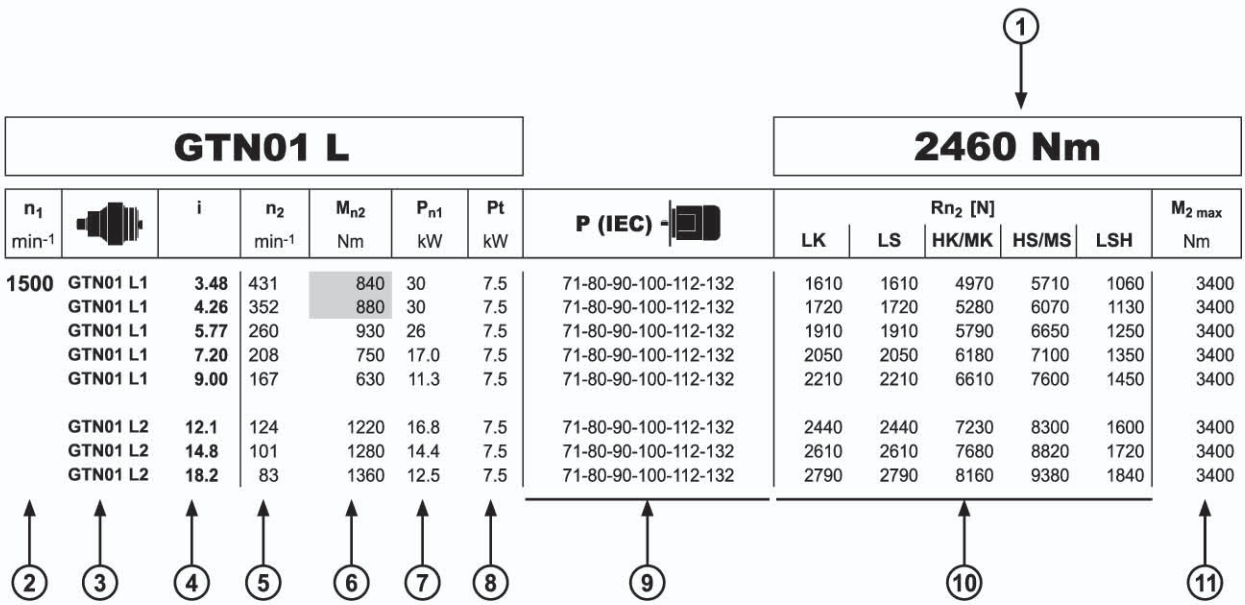

n_1 min^{-1}		i	n_2 min^{-1}	M_{n2} Nm	P_{n1} kW	Pt kW	P (IEC)	Rn_2 [N] LK	LS	HK/MK	HS/MS	LSH	$M_{2\,max}$ Nm
1500	GTN01 L1	3.48	431	840	30	7.5	71-80-90-100-112-132	1610	1610	4970	5710	1060	3400
	GTN01 L1	4.26	352	880	30	7.5	71-80-90-100-112-132	1720	1720	5280	6070	1130	3400
	GTN01 L1	5.77	260	930	26	7.5	71-80-90-100-112-132	1910	1910	5790	6650	1250	3400
	GTN01 L1	7.20	208	750	17.0	7.5	71-80-90-100-112-132	2050	2050	6180	7100	1350	3400
	GTN01 L1	9.00	167	630	11.3	7.5	71-80-90-100-112-132	2210	2210	6610	7600	1450	3400
	GTN01 L2	12.1	124	1220	16.8	7.5	71-80-90-100-112-132	2440	2440	7230	8300	1600	3400
	GTN01 L2	14.8	101	1280	14.4	7.5	71-80-90-100-112-132	2610	2610	7680	8820	1720	3400
	GTN01 L2	18.2	83	1360	12.5	7.5	71-80-90-100-112-132	2790	2790	8160	9380	1840	3400

1	参考扭矩	*Reference torque*
2	输入转速	*Gearbox drive speed*
3	同轴齿轮箱机座号	*Frame size of the in-line gear unit*
4	传动比	*Gear ratio*
5	齿轮箱输出转速	*Gearbox output speed*
6	齿轮箱额定输出扭矩基于： –安全系数S=1–10000小时的理论寿命	*Gearbox rated output torque based on:* *- safety factor S=1* *- 10000 h theoretical lifetime*
7	齿轮箱额定输入功率，基于： –安全系数S=1–10000小时的理论寿命	*Gearbox rated input power, based on:* *- safety factor S=1* *- 10000 h theoretical lifetime*
8	齿轮箱热功率	*Gearbox thermal capacity*
9	可安装IEC电机机座号	*Frame size of available IEC motor*
10	输出轴允许悬挑载荷，基于：安全系数S=1对于不作用于轴中点的力，请参见特定齿轮箱尺寸后面的页面中提供的图表	*Permitted overhung loading on output shaft, based on:* *- safety factor S=1* *- 10000 h theoretical lifetime.* *For forces applying off mid-point of the shaft, see diagrams provided in the pages following dimensions of the specific gearbox*
11	最大扭矩	*Maximum torque*

GTN00 L — 1250 Nm

n_1 min^{-1}		i	n_2 min^{-1}	M_{n2} Nm	P_{n1} kW	Pt kW	P (IEC)	Rn_2 [N] LK/MK	LS/MS	HK	HS	LSH	$M_{2\,max}$ Nm
1500	GTN00 L1	3.48	431	470	20	7.5	71-80-90-100-112-132	1610	1610	4970	5710	1060	2000
	GTN00 L1	4.26	352	490	18.8	7.5	71-80-90-100-112-132	1720	1720	5280	6070	1130	2400
	GTN00 L1	5.77	260	470	13.3	7.5	71-80-90-100-112-132	1910	1910	5790	6650	1250	2400
	GTN00 L1	7.20	208	410	9.2	7.5	71-80-90-100-112-132	2050	2050	6180	7100	1350	2400
	GTN00 L1	9.00	167	320	5.7	7.5	71-80-90-100-112-132	2210	2210	6610	7600	1450	2400
	GTN00 L2	12.1	124	680	9.4	7.5	71-80-90-100-112-132	2440	2440	7230	8300	1600	2000
	GTN00 L2	14.8	101	720	8.1	7.5	71-80-90-100-112-132	2610	2610	7680	8820	1720	2000
	GTN00 L2	18.2	83	750	6.9	7.5	71-80-90-100-112-132	2790	2790	8160	9380	1840	2400
	GTN00 L2	20.1	75	640	5.3	7.5	71-80-90-100-112-132	2890	2890	8410	9660	1900	2000
	GTN00 L2	24.6	61	800	5.5	7.5	71-80-90-100-112-132	3090	3090	8940	10300	2030	2400
	GTN00 L2	30.7	49	840	4.6	7.5	71-80-90-100-112-132	3330	3330	9550	11000	2190	2400
	GTN00 L2	33.3	45	650	3.3	7.5	71-80-90-100-112-132	3420	3420	9790	11200	2250	2400
	GTN00 L2	38.4	39	840	3.7	7.5	71-80-90-100-112-132	3590	3590	10200	11700	2360	2400
	GTN00 L2	41.5	36	650	2.6	7.5	71-80-90-100-112-132	3680	3680	10500	12000	2420	2400
	GTN00 L2	51.9	28.9	650	2.1	7.5	71-80-90-100-112-132	3970	3970	11200	12900	2610	2400
	GTN00 L2	64.8	23.1	550	1.4	7.5	71-80-90-100-112-132	4270	4270	12000	13700	2810	2400
	GTN00 L3	51.6	29.1	850	2.8	7.5	71-80-90-100-112-132	3960	3960	11200	12800	2600	2000
	GTN00 L3	63.2	23.7	850	2.3	7.5	71-80-90-100-112-132	4240	4240	11900	13600	2780	2400
	GTN00 L3	69.9	21.5	650	1.6	7.5	71-80-90-100-112-132	4380	4380	12200	14000	2880	2000
	GTN00 L3	77.5	19.4	850	1.9	7.5	71-80-90-100-112-132	4530	4530	12600	14500	2980	2400
	GTN00 L3	85.6	17.5	850	1.7	7.5	71-80-90-100-112-132	4680	4680	13000	14900	3080	2400
	GTN00 L3	105	14.3	860	1.4	7.5	71-80-90-100-112-132	5010	5010	13800	15900	3300	2400
	GTN00 L3	116	13.0	650	0.97	7.5	71-80-90-100-112-132	5180	5180	14200	16300	3410	2400
	GTN00 L3	131	11.5	860	1.1	7.5	71-80-90-100-112-132	5400	5400	14800	17000	3550	2400
	GTN00 L3	142	10.6	860	1.0	7.5	71-80-90-100-112-132	5540	5540	15100	17400	3650	2400
	GTN00 L3	177	8.5	880	0.86	7.5	71-80-90-100-112-132	5970	5970	16200	18600	3920	2400
	GTN00 L3	192	7.8	650	0.58	7.5	71-80-90-100-112-132	6130	6130	16600	19000	4030	2400
	GTN00 L3	221	6.8	910	0.71	7.5	71-80-90-100-112-132	6430	6430	17300	19800	4230	2400
	GTN00 L3	240	6.3	650	0.47	7.5	71-80-90-100-112-132	6600	6600	17700	20300	4340	2400
	GTN00 L3	299	5.0	650	0.37	7.5	71-80-90-100-112-132	7110	7110	18900	21700	4670	2400
	GTN00 L3	374	4.0	670	0.31	7.5	71-80-90-100-112-132	7660	7660	20200	23200	5030	2400
	GTN00 L4	330	4.5	970	0.52	6.0	71-80-90-100-112-132	7350	7350	19500	22400	4830	2400
	GTN00 L4	403	3.7	680	0.30	6.0	71-80-90-100-112-132	7850	7850	20700	23800	5160	2400
	GTN00 L4	447	3.4	1020	0.40	6.0	71-80-90-100-112-132	8130	8130	21300	24500	5340	2400
	GTN00 L4	494	3.0	1030	0.37	6.0	71-80-90-100-112-132	8400	8400	22000	25300	5520	2400
	GTN00 L4	558	2.7	1060	0.34	6.0	71-80-90-100-112-132	8750	8750	22800	26200	5750	2400
	GTN00 L4	616	2.4	1070	0.31	6.0	71-80-90-100-112-132	9050	9050	23500	27000	5950	2400
	GTN00 L4	755	2.0	1110	0.26	6.0	71-80-90-100-112-132	9680	9680	25000	28700	6360	2400
	GTN00 L4	819	1.8	1130	0.24	6.0	71-80-90-100-112-132	9940	9940	25600	29400	6540	2400
	GTN00 L4	942	1.6	1160	0.22	6.0	71-80-90-100-112-132	10400	10400	26700	30700	6850	2400
	GTN00 L4	1022	1.5	1170	0.20	6.0	71-80-90-100-112-132	10700	10700	27300	31400	7040	2400
	GTN00 L4	1108	1.4	810	0.13	6.0	71-80-90-100-112-132	11000	11000	28000	32200	7230	2400
	GTN00 L4	1275	1.2	1220	0.17	6.0	71-80-90-100-112-132	11500	11500	29200	33600	7580	2400
	GTN00 L4	1383	1.1	850	0.11	6.0	71-80-90-100-112-132	11800	11800	29900	34000	7790	2400
	GTN00 L4	1591	0.94	1250	0.14	6.0	71-80-90-100-112-132	12000	12400	31000	34000	8000	2400
	GTN00 L4	1725	0.87	860	0.09	6.0	71-80-90-100-112-132	12000	12500	31000	34000	8000	2400
	GTN00 L4	2153	0.70	860	0.07	6.0	71-80-90-100-112-132	12000	12500	31000	34000	8000	2400
	GTN00 L4	2692	0.56	1000	0.07	6.0	71-80-90-100-112-132	12000	12500	31000	34000	8000	2400
1000	GTN00 L1	3.48	287	530	16.5	9.0	71-80-90-100-112-132	1840	1840	5610	6450	1210	2000
	GTN00 L1	4.26	235	560	14.1	9.0	71-80-90-100-112-132	1970	1970	5970	6860	1300	2400
	GTN00 L1	5.77	173	530	10.0	9.0	71-80-90-100-112-132	2180	2180	6530	7510	1430	2400
	GTN00 L1	7.20	139	460	6.9	9.0	71-80-90-100-112-132	2350	2350	6980	8020	1540	2400
	GTN00 L1	9.00	111	360	4.3	9.0	71-80-90-100-112-132	2530	2530	7470	8580	1660	2400
	GTN00 L2	12.1	83	730	6.7	9.0	71-80-90-100-112-132	2790	2790	8160	9380	1840	2000
	GTN00 L2	14.8	67	790	5.9	9.0	71-80-90-100-112-132	2990	2990	8670	9970	1970	2000
	GTN00 L2	18.2	55	820	5.0	9.0	71-80-90-100-112-132	3200	3200	9220	10600	2100	2400
	GTN00 L2	20.1	50	650	3.6	9.0	71-80-90-100-112-132	3310	3310	9500	10900	2170	2000
	GTN00 L2	24.6	41	840	3.8	9.0	71-80-90-100-112-132	3540	3540	10100	11600	2330	2400
	GTN00 L2	30.7	33	850	3.1	9.0	71-80-90-100-112-132	3810	3810	10800	12400	2500	2400
	GTN00 L2	33.3	30	650	2.2	9.0	71-80-90-100-112-132	3910	3910	11100	12700	2570	2400
	GTN00 L2	38.4	26.1	850	2.5	9.0	71-80-90-100-112-132	4100	4100	11500	13300	2700	2400
	GTN00 L2	41.5	24.1	650	1.7	9.0	71-80-90-100-112-132	4210	4210	11800	13600	2770	2400
	GTN00 L2	51.9	19.3	650	1.4	9.0	71-80-90-100-112-132	4540	4540	12600	14500	2980	2400

B

GTN00 L — 1250 Nm

n_1 min^{-1}		i	n_2 min^{-1}	M_{n2} Nm	P_{n1} kW	Pt kW	P (IEC)	Rn_2 [N] LK/MK	LS/MS	HK	HS	LSH	$M_{2\,max}$ Nm
1000	GTN00 L2	64.8	15.4	550	0.94	9.0	71-80-90-100-112-132	4890	4890	13500	15500	3210	2400
	GTN00 L3	51.6	19.4	850	1.9	9.0	71-80-90-100-112-132	4530	4530	12600	14500	2980	2000
	GTN00 L3	63.2	15.8	850	1.5	9.0	71-80-90-100-112-132	4850	4850	13400	15400	3190	2400
	GTN00 L3	69.9	14.3	650	1.1	9.0	71-80-90-100-112-132	5010	5010	13800	15900	3290	2000
	GTN00 L3	77.5	12.9	860	1.3	9.0	71-80-90-100-112-132	5190	5190	14200	16400	3410	2400
	GTN00 L3	85.6	11.7	860	1.2	9.0	71-80-90-100-112-132	5360	5360	14700	16900	3530	2400
	GTN00 L3	105	9.5	870	0.95	9.0	71-80-90-100-112-132	5740	5740	15600	17900	3770	2400
	GTN00 L3	116	8.6	650	0.64	9.0	71-80-90-100-112-132	5930	5930	16100	18500	3900	2400
	GTN00 L3	131	7.6	890	0.78	9.0	71-80-90-100-112-132	6180	6180	16700	19200	4060	2400
	GTN00 L3	142	7.0	900	0.73	9.0	71-80-90-100-112-132	6350	6350	17100	19600	4170	2400
	GTN00 L3	177	5.6	930	0.60	9.0	71-80-90-100-112-132	6830	6830	18300	21000	4490	2400
	GTN00 L3	192	5.2	650	0.39	9.0	71-80-90-100-112-132	7020	7020	18700	21500	4620	2400
	GTN00 L3	221	4.5	970	0.50	9.0	71-80-90-100-112-132	7360	7360	19500	22400	4840	2400
	GTN00 L3	240	4.2	670	0.32	9.0	71-80-90-100-112-132	7560	7560	20000	23000	4970	2400
	GTN00 L3	299	3.3	700	0.27	9.0	71-80-90-100-112-132	8140	8140	21400	24500	5350	2400
	GTN00 L3	374	2.7	720	0.22	9.0	71-80-90-100-112-132	8770	8770	22800	26200	5760	2400
	GTN00 L4	330	3.0	1040	0.37	7.2	71-80-90-100-112-132	8410	8410	22000	25300	5530	2400
	GTN00 L4	403	2.5	730	0.21	7.2	71-80-90-100-112-132	8990	8990	23400	26800	5910	2400
	GTN00 L4	447	2.2	1090	0.29	7.2	71-80-90-100-112-132	9300	9300	24100	27700	6120	2400
	GTN00 L4	494	2.0	1110	0.27	7.2	71-80-90-100-112-132	9620	9620	24800	28500	6320	2400
	GTN00 L4	558	1.8	1130	0.24	7.2	71-80-90-100-112-132	10000	10000	25800	29600	6590	2400
	GTN00 L4	616	1.6	1150	0.22	7.2	71-80-90-100-112-132	10400	10400	26500	30500	6810	2400
	GTN00 L4	755	1.3	1190	0.19	7.2	71-80-90-100-112-132	11100	11100	28200	32400	7280	2400
	GTN00 L4	819	1.2	1210	0.17	7.2	71-80-90-100-112-132	11400	11400	28900	33200	7480	2400
	GTN00 L4	942	1.1	1240	0.16	7.2	71-80-90-100-112-132	11900	11900	30100	34000	7840	2400
	GTN00 L4	1022	0.98	1250	0.14	7.2	71-80-90-100-112-132	12000	12300	30900	34000	8000	2400
	GTN00 L4	1108	0.90	860	0.09	7.2	71-80-90-100-112-132	12000	12500	31000	34000	8000	2400
	GTN00 L4	1275	0.78	1250	0.12	7.2	71-80-90-100-112-132	12000	12500	31000	34000	8000	2400
	GTN00 L4	1383	0.72	860	0.07	7.2	71-80-90-100-112-132	12000	12500	31000	34000	8000	2400
	GTN00 L4	1591	0.63	1250	0.09	7.2	71-80-90-100-112-132	12000	12500	31000	34000	8000	2400
	GTN00 L4	1725	0.58	860	0.06	7.2	71-80-90-100-112-132	12000	12500	31000	34000	8000	2400
	GTN00 L4	2153	0.46	860	0.05	7.2	71-80-90-100-112-132	12000	12500	31000	34000	8000	2400
	GTN00 L4	2692	0.37	1000	0.04	7.2	71-80-90-100-112-132	12000	12500	31000	34000	8000	2400
500	GTN00 L1	3.48	144	650	10.2	15.0	71-80-90-100-112-132	2320	2320	6910	7940	1530	2000
	GTN00 L1	4.26	117	690	8.7	15.0	71-80-90-100-112-132	2490	2490	7350	8440	1630	2400
	GTN00 L1	5.77	87	630	5.9	15.0	71-80-90-100-112-132	2750	2750	8040	9240	1810	2400
	GTN00 L1	7.20	69	530	4.0	15.0	71-80-90-100-112-132	2960	2960	8600	9880	1950	2400
	GTN00 L1	9.00	56	370	2.2	15.0	71-80-90-100-112-132	3190	3190	9190	10600	2100	2400
	GTN00 L2	12.1	41	730	3.4	15.0	71-80-90-100-112-132	3520	3520	10000	11500	2310	2000
	GTN00 L2	14.8	34	840	3.2	15.0	71-80-90-100-112-132	3770	3770	10700	12300	2480	2000
	GTN00 L2	18.2	27.5	850	2.6	15.0	71-80-90-100-112-132	4030	4030	11300	13000	2650	2400
	GTN00 L2	20.1	24.9	650	1.8	15.0	71-80-90-100-112-132	4170	4170	11700	13400	2740	2000
	GTN00 L2	24.6	20.3	850	1.9	15.0	71-80-90-100-112-132	4460	4460	12400	14300	2930	2400
	GTN00 L2	30.7	16.3	850	1.5	15.0	71-80-90-100-112-132	4800	4800	13300	15300	3160	2400
	GTN00 L2	33.3	15.0	650	1.1	15.0	71-80-90-100-112-132	4930	4930	13600	15600	3240	2400
	GTN00 L2	38.4	13.0	860	1.2	15.0	71-80-90-100-112-132	5170	5170	14200	16300	3400	2400
	GTN00 L2	41.5	12.0	650	0.87	15.0	71-80-90-100-112-132	5310	5310	14500	16700	3490	2400
	GTN00 L2	51.9	9.6	650	0.70	15.0	71-80-90-100-112-132	5720	5720	15600	17900	3760	2400
	GTN00 L2	64.8	7.7	550	0.47	15.0	71-80-90-100-112-132	6160	6160	16600	19100	4050	2400
	GTN00 L3	51.6	9.7	860	0.96	15.0	71-80-90-100-112-132	5710	5710	15500	17800	3750	2000
	GTN00 L3	63.2	7.9	890	0.81	15.0	71-80-90-100-112-132	6110	6110	16500	19000	4020	2400
	GTN00 L3	69.9	7.2	650	0.53	15.0	71-80-90-100-112-132	6310	6310	17000	19500	4150	2000
	GTN00 L3	77.5	6.5	920	0.68	15.0	71-80-90-100-112-132	6540	6540	17500	20100	4300	2400
	GTN00 L3	85.6	5.8	930	0.62	15.0	71-80-90-100-112-132	6760	6760	18100	20800	4440	2400
	GTN00 L3	105	4.8	960	0.52	15.0	71-80-90-100-112-132	7230	7230	19200	22100	4750	2400
	GTN00 L3	116	4.3	670	0.33	15.0	71-80-90-100-112-132	7470	7470	19800	22700	4910	2400
	GTN00 L3	131	3.8	990	0.44	15.0	71-80-90-100-112-132	7780	7780	20500	23600	5120	2400
	GTN00 L3	142	3.5	1010	0.41	15.0	71-80-90-100-112-132	8000	8000	21000	24200	5260	2400
	GTN00 L3	177	2.8	1050	0.34	15.0	71-80-90-100-112-132	8610	8610	22500	25800	5660	2400
	GTN00 L3	192	2.6	730	0.22	15.0	71-80-90-100-112-132	8850	8850	23000	26500	5820	2400
	GTN00 L3	221	2.3	1090	0.28	15.0	71-80-90-100-112-132	9270	9270	24000	27600	6090	2400
	GTN00 L3	240	2.1	750	0.18	15.0	71-80-90-100-112-132	9520	9520	24600	28300	6260	2400

B

GTN00 L — 1250 Nm

n_1 min^{-1}		i	n_2 min^{-1}	M_{n2} Nm	P_{n1} kW	Pt kW	P (IEC)	Rn_2 [N] LK/MK	LS/MS	HK	HS	LSH	$M_{2\,max}$ Nm
500	GTN00 L3	299	1.7	780	0.15	15.0	71-80-90-100-112-132	10300	10300	26300	30200	6740	2400
	GTN00 L3	374	1.3	820	0.13	15.0	71-80-90-100-112-132	11000	11000	28100	32300	7260	2400
	GTN00 L4	330	1.5	1170	0.21	12.0	71-80-90-100-112-132	10600	10600	27100	31100	6970	2400
	GTN00 L4	403	1.2	830	0.12	12.0	71-80-90-100-112-132	11300	11300	28800	33000	7450	2400
	GTN00 L4	447	1.1	1230	0.16	12.0	71-80-90-100-112-132	11700	11700	29700	34000	7710	2400
	GTN00 L4	494	1.0	1250	0.15	12.0	71-80-90-100-112-132	12000	12100	30600	34000	7970	2400
	GTN00 L4	558	0.90	1250	0.13	12.0	71-80-90-100-112-132	12000	12500	31000	34000	8000	2400
	GTN00 L4	616	0.81	1250	0.12	12.0	71-80-90-100-112-132	12000	12500	31000	34000	8000	2400
	GTN00 L4	755	0.66	1250	0.10	12.0	71-80-90-100-112-132	12000	12500	31000	34000	8000	2400
	GTN00 L4	819	0.61	1250	0.09	12.0	71-80-90-100-112-132	12000	12500	31000	34000	8000	2400
	GTN00 L4	942	0.53	1250	0.08	12.0	71-80-90-100-112-132	12000	12500	31000	34000	8000	2400
	GTN00 L4	1022	0.49	1250	0.07	12.0	71-80-90-100-112-132	12000	12500	31000	34000	8000	2400
	GTN00 L4	1108	0.45	860	0.05	12.0	71-80-90-100-112-132	12000	12500	31000	34000	8000	2400
	GTN00 L4	1275	0.39	1250	0.06	12.0	71-80-90-100-112-132	12000	12500	31000	34000	8000	2400
	GTN00 L4	1383	0.36	860	0.04	12.0	71-80-90-100-112-132	12000	12500	31000	34000	8000	2400
	GTN00 L4	1591	0.31	1250	0.05	12.0	71-80-90-100-112-132	12000	12500	31000	34000	8000	2400
	GTN00 L4	1725	0.29	860	0.03	12.0	71-80-90-100-112-132	12000	12500	31000	34000	8000	2400
	GTN00 L4	2153	0.23	860	0.02	12.0	71-80-90-100-112-132	12000	12500	31000	34000	8000	2400
	GTN00 L4	2692	0.19	1000	0.02	12.0	71-80-90-100-112-132	12000	12500	31000	34000	8000	2400

B

GTN01 L — 2460 Nm

n_1 min^{-1}		i	n_2 min^{-1}	M_{n2} Nm	P_{n1} kW	Pt kW	P (IEC)	Rn_2 [N] LK	LS	HK/MK	HS/MS	LSH	$M_{2\,max}$ Nm
1500	GTN01 L1	3.48	431	840	30	7.5	71-80-90-100-112-132	1610	1610	4970	5710	1060	3400
	GTN01 L1	4.26	352	880	30	7.5	71-80-90-100-112-132	1720	1720	5280	6070	1130	3400
	GTN01 L1	5.77	260	930	26	7.5	71-80-90-100-112-132	1910	1910	5790	6650	1250	3400
	GTN01 L1	7.20	208	750	17.0	7.5	71-80-90-100-112-132	2050	2050	6180	7100	1350	3400
	GTN01 L1	9.00	167	630	11.3	7.5	71-80-90-100-112-132	2210	2210	6610	7600	1450	3400
	GTN01 L2	12.1	124	1220	16.8	7.5	71-80-90-100-112-132	2440	2440	7230	8300	1600	3400
	GTN01 L2	14.8	101	1280	14.4	7.5	71-80-90-100-112-132	2610	2610	7680	8820	1720	3400
	GTN01 L2	18.2	83	1360	12.5	7.5	71-80-90-100-112-132	2790	2790	8160	9380	1840	3400
	GTN01 L2	20.1	75	1260	10.5	7.5	71-80-90-100-112-132	2890	2890	8410	9660	1900	3400
	GTN01 L2	24.6	61	1490	10.1	7.5	71-80-90-100-112-132	3090	3090	8940	10300	2030	3400
	GTN01 L2	30.7	49	1580	8.6	7.5	71-80-90-100-112-132	3330	3330	9550	11000	2190	3400
	GTN01 L2	33.3	45	1300	6.5	7.5	71-80-90-100-112-132	3420	3420	9790	11200	2250	3400
	GTN01 L2	38.4	39	1540	6.7	7.5	71-80-90-100-112-132	3590	3590	10200	11700	2360	3400
	GTN01 L2	41.5	36	1300	5.2	7.5	71-80-90-100-112-132	3680	3680	10500	12000	2420	3400
	GTN01 L2	51.9	28.9	1300	4.2	7.5	71-80-90-100-112-132	3970	3970	11200	12900	2610	3400
	GTN01 L2	64.8	23.1	1150	3.0	7.5	71-80-90-100-112-132	4270	4270	12000	13700	2810	3400
	GTN01 L3	51.6	29.1	1630	5.4	7.5	71-80-90-100-112-132	3960	3960	11200	12800	2600	3400
	GTN01 L3	63.2	23.7	1650	4.5	7.5	71-80-90-100-112-132	4240	4240	11900	13600	2780	3400
	GTN01 L3	69.9	21.5	1300	3.2	7.5	71-80-90-100-112-132	4380	4380	12200	14000	2880	3400
	GTN01 L3	77.5	19.4	1670	3.7	7.5	71-80-90-100-112-132	4530	4530	12600	14500	2980	3400
	GTN01 L3	85.6	17.5	1680	3.4	7.5	71-80-90-100-112-132	4680	4680	13000	14900	3080	3400
	GTN01 L3	105	14.3	1700	2.8	7.5	71-80-90-100-112-132	5010	5010	13800	15900	3300	3400
	GTN01 L3	116	13.0	1300	1.9	7.5	71-80-90-100-112-132	5180	5180	14200	16300	3410	3400
	GTN01 L3	131	11.5	1720	2.3	7.5	71-80-90-100-112-132	5400	5400	14800	17000	3550	3400
	GTN01 L3	142	10.6	1720	2.1	7.5	71-80-90-100-112-132	5540	5540	15100	17400	3650	3400
	GTN01 L3	177	8.5	1770	1.7	7.5	71-80-90-100-112-132	5970	5970	16200	18600	3920	3400
	GTN01 L3	192	7.8	1300	1.2	7.5	71-80-90-100-112-132	6130	6130	16600	19000	4030	3400
	GTN01 L3	221	6.8	1790	1.4	7.5	71-80-90-100-112-132	6430	6430	17300	19800	4230	3400
	GTN01 L3	240	6.3	1300	0.93	7.5	71-80-90-100-112-132	6600	6600	17700	20300	4340	3400
	GTN01 L3	299	5.0	1300	0.75	7.5	71-80-90-100-112-132	7110	7110	18900	21700	4670	3400
	GTN01 L3	374	4.0	1350	0.62	7.5	71-80-90-100-112-132	7660	7660	20200	23200	5030	3400
	GTN01 L4	330	4.5	1920	1.0	6.0	71-80-90-100-112-132	7350	7350	19500	22400	4830	3400
	GTN01 L4	403	3.7	1370	0.60	6.0	71-80-90-100-112-132	7850	7850	20700	23800	5160	3400
	GTN01 L4	447	3.4	2030	0.81	6.0	71-80-90-100-112-132	8130	8130	21300	24500	5340	3400
	GTN01 L4	494	3.0	2070	0.74	6.0	71-80-90-100-112-132	8400	8400	22000	25300	5520	3400

GTN01 L — 2460 Nm

n_1 min^{-1}		i	n_2 min^{-1}	M_{n2} Nm	P_{n1} kW	Pt kW	P (IEC)	Rn_2 [N] LK	LS	HK/MK	HS/MS	LSH	$M_{2\,max}$ Nm
1500	GTN01 L4	558	2.7	2110	0.67	6.0	71-80-90-100-112-132	8750	8750	22800	26200	5750	3400
	GTN01 L4	616	2.4	2150	0.62	6.0	71-80-90-100-112-132	9050	9050	23500	27000	5950	3400
	GTN01 L4	755	2.0	2220	0.52	6.0	71-80-90-100-112-132	9680	9680	25000	28700	6360	3400
	GTN01 L4	819	1.8	2240	0.49	6.0	71-80-90-100-112-132	9940	9940	25600	29400	6540	3400
	GTN01 L4	942	1.6	2290	0.43	6.0	71-80-90-100-112-132	10400	10400	26700	30700	6850	3400
	GTN01 L4	1022	1.5	2320	0.40	6.0	71-80-90-100-112-132	10700	10700	27300	31400	7040	3400
	GTN01 L4	1108	1.4	1630	0.26	6.0	71-80-90-100-112-132	11000	11000	28000	32200	7230	3400
	GTN01 L4	1275	1.2	2400	0.33	6.0	71-80-90-100-112-132	11500	11500	29200	33600	7580	3400
	GTN01 L4	1383	1.1	1700	0.22	6.0	71-80-90-100-112-132	11800	11800	29900	34000	7790	3400
	GTN01 L4	1591	0.94	2000	0.22	6.0	71-80-90-100-112-132	12000	12400	31000	34000	8000	3400
	GTN01 L4	1725	0.87	1720	0.18	6.0	71-80-90-100-112-132	12000	12500	31000	34000	8000	3400
	GTN01 L4	2153	0.70	1720	0.14	6.0	71-80-90-100-112-132	12000	12500	31000	34000	8000	3400
	GTN01 L4	2692	0.56	1720	0.11	6.0	71-80-90-100-112-132	12000	12500	31000	34000	8000	3400
1000	GTN01 L1	3.48	287	950	29	9.0	71-80-90-100-112-132	1840	1840	5610	6450	1210	3400
	GTN01 L1	4.26	235	990	25	9.0	71-80-90-100-112-132	1970	1970	5970	6860	1300	3400
	GTN01 L1	5.77	173	1050	19.7	9.0	71-80-90-100-112-132	2180	2180	6530	7510	1430	3400
	GTN01 L1	7.20	139	850	12.8	9.0	71-80-90-100-112-132	2350	2350	6980	8020	1540	3400
	GTN01 L1	9.00	111	710	8.5	9.0	71-80-90-100-112-132	2530	2530	7470	8580	1660	3400
	GTN01 L2	12.1	83	1330	12.3	9.0	71-80-90-100-112-132	2790	2790	8160	9380	1840	3400
	GTN01 L2	14.8	67	1440	10.8	9.0	71-80-90-100-112-132	2990	2990	8670	9970	1970	3400
	GTN01 L2	18.2	55	1530	9.4	9.0	71-80-90-100-112-132	3200	3200	9220	10600	2100	3400
	GTN01 L2	20.1	50	1300	7.2	9.0	71-80-90-100-112-132	3310	3310	9500	10900	2170	3400
	GTN01 L2	24.6	41	1600	7.2	9.0	71-80-90-100-112-132	3540	3540	10100	11600	2330	3400
	GTN01 L2	30.7	33	1620	5.9	9.0	71-80-90-100-112-132	3810	3810	10800	12400	2500	3400
	GTN01 L2	33.3	30	1300	4.3	9.0	71-80-90-100-112-132	3910	3910	11100	12700	2570	3400
	GTN01 L2	38.4	26.1	1550	4.5	9.0	71-80-90-100-112-132	4100	4100	11500	13300	2700	3400
	GTN01 L2	41.5	24.1	1300	3.5	9.0	71-80-90-100-112-132	4210	4210	11800	13600	2770	3400
	GTN01 L2	51.9	19.3	1300	2.8	9.0	71-80-90-100-112-132	4540	4540	12600	14500	2980	3400
	GTN01 L2	64.8	15.4	1150	2.0	9.0	71-80-90-100-112-132	4890	4890	13500	15500	3210	3400
	GTN01 L3	51.6	19.4	1670	3.7	9.0	71-80-90-100-112-132	4530	4530	12600	14500	2980	3400
	GTN01 L3	63.2	15.8	1690	3.1	9.0	71-80-90-100-112-132	4850	4850	13400	15400	3190	3400
	GTN01 L3	69.9	14.3	1300	2.1	9.0	71-80-90-100-112-132	5010	5010	13800	15900	3290	3400
	GTN01 L3	77.5	12.9	1710	2.5	9.0	71-80-90-100-112-132	5190	5190	14200	16400	3410	3400
	GTN01 L3	85.6	11.7	1710	2.3	9.0	71-80-90-100-112-132	5360	5360	14700	16900	3530	3400
	GTN01 L3	105	9.5	1740	1.9	9.0	71-80-90-100-112-132	5740	5740	15600	17900	3770	3400
	GTN01 L3	116	8.6	1300	1.3	9.0	71-80-90-100-112-132	5930	5930	16100	18500	3900	3400
	GTN01 L3	131	7.6	1790	1.6	9.0	71-80-90-100-112-132	6180	6180	16700	19200	4060	3400
	GTN01 L3	142	7.0	1810	1.5	9.0	71-80-90-100-112-132	6350	6350	17100	19600	4170	3400
	GTN01 L3	177	5.6	1860	1.2	9.0	71-80-90-100-112-132	6830	6830	18300	21000	4490	3400
	GTN01 L3	192	5.2	1300	0.78	9.0	71-80-90-100-112-132	7020	7020	18700	21500	4620	3400
	GTN01 L3	221	4.5	1850	0.96	9.0	71-80-90-100-112-132	7360	7360	19500	22400	4840	3400
	GTN01 L3	240	4.2	1340	0.64	9.0	71-80-90-100-112-132	7560	7560	20000	23000	4970	3400
	GTN01 L3	299	3.3	1390	0.53	9.0	71-80-90-100-112-132	8140	8140	21400	24500	5350	3400
	GTN01 L3	374	2.7	1440	0.44	9.0	71-80-90-100-112-132	8770	8770	22800	26200	5760	3400
	GTN01 L4	330	3.0	2070	0.74	7.2	71-80-90-100-112-132	8410	8410	22000	25300	5530	3400
	GTN01 L4	403	2.5	1460	0.43	7.2	71-80-90-100-112-132	8990	8990	23400	26800	5910	3400
	GTN01 L4	447	2.2	2180	0.58	7.2	71-80-90-100-112-132	9300	9300	24100	27700	6120	3400
	GTN01 L4	494	2.0	2210	0.53	7.2	71-80-90-100-112-132	9620	9620	24800	28500	6320	3400
	GTN01 L4	558	1.8	2250	0.48	7.2	71-80-90-100-112-132	10000	10000	25800	29600	6590	3400
	GTN01 L4	616	1.6	2290	0.44	7.2	71-80-90-100-112-132	10400	10400	26500	30500	6810	3400
	GTN01 L4	755	1.3	2360	0.37	7.2	71-80-90-100-112-132	11100	11100	28200	32400	7280	3400
	GTN01 L4	819	1.2	2390	0.34	7.2	71-80-90-100-112-132	11400	11400	28900	33200	7480	3400
	GTN01 L4	942	1.1	2440	0.31	7.2	71-80-90-100-112-132	11900	11900	30100	34000	7840	3400
	GTN01 L4	1022	0.98	2460	0.28	7.2	71-80-90-100-112-132	12000	12300	30900	34000	8000	3400
	GTN01 L4	1108	0.90	1720	0.18	7.2	71-80-90-100-112-132	12000	12500	31000	34000	8000	3400
	GTN01 L4	1275	0.78	2460	0.23	7.2	71-80-90-100-112-132	12000	12500	31000	34000	8000	3400
	GTN01 L4	1383	0.72	1720	0.15	7.2	71-80-90-100-112-132	12000	12500	31000	34000	8000	3400
	GTN01 L4	1591	0.63	2000	0.15	7.2	71-80-90-100-112-132	12000	12500	31000	34000	8000	3400
	GTN01 L4	1725	0.58	1720	0.12	7.2	71-80-90-100-112-132	12000	12500	31000	34000	8000	3400
	GTN01 L4	2153	0.46	1720	0.09	7.2	71-80-90-100-112-132	12000	12500	31000	34000	8000	3400
	GTN01 L4	2692	0.37	1720	0.08	7.2	71-80-90-100-112-132	12000	12500	31000	34000	8000	3400
500	GTN01 L1	3.48	144	1170	18.1	15.0	71-80-90-100-112-132	2320	2320	6910	7940	1530	3400

B

GTN01 L — 2460 Nm

n_1 min^{-1}		i	n_2 min^{-1}	M_{n2} Nm	P_{n1} kW	Pt kW	P (IEC)	Rn_2 [N] LK	LS	HK/MK	HS/MS	LSH	$M_{2\,max}$ Nm
500	GTN01 L1	4.26	117	1220	15.4	15.0	71-80-90-100-112-132	2490	2490	7350	8440	1630	3400
	GTN01 L1	5.77	87	1250	11.7	15.0	71-80-90-100-112-132	2750	2750	8040	9240	1810	3400
	GTN01 L1	7.20	69	1050	7.8	15.0	71-80-90-100-112-132	2960	2960	8600	9880	1950	3400
	GTN01 L1	9.00	56	730	4.4	15.0	71-80-90-100-112-132	3190	3190	9190	10600	2100	3400
	GTN01 L2	12.1	41	1430	6.6	15.0	71-80-90-100-112-132	3520	3520	10000	11500	2310	3400
	GTN01 L2	14.8	34	1620	6.1	15.0	71-80-90-100-112-132	3770	3770	10700	12300	2480	3400
	GTN01 L2	18.2	27.5	1630	5.0	15.0	71-80-90-100-112-132	4030	4030	11300	13000	2650	3400
	GTN01 L2	20.1	24.9	1300	3.6	15.0	71-80-90-100-112-132	4170	4170	11700	13400	2740	3400
	GTN01 L2	24.6	20.3	1660	3.8	15.0	71-80-90-100-112-132	4460	4460	12400	14300	2930	3400
	GTN01 L2	30.7	16.3	1680	3.1	15.0	71-80-90-100-112-132	4800	4800	13300	15300	3160	3400
	GTN01 L2	33.3	15.0	1300	2.2	15.0	71-80-90-100-112-132	4930	4930	13600	15600	3240	3400
	GTN01 L2	38.4	13.0	1560	2.3	15.0	71-80-90-100-112-132	5170	5170	14200	16300	3400	3400
	GTN01 L2	41.5	12.0	1300	1.7	15.0	71-80-90-100-112-132	5310	5310	14500	16700	3490	3400
	GTN01 L2	51.9	9.6	1300	1.4	15.0	71-80-90-100-112-132	5720	5720	15600	17900	3760	3400
	GTN01 L2	64.8	7.7	1150	0.99	15.0	71-80-90-100-112-132	6160	6160	16600	19100	4050	3400
	GTN01 L3	51.6	9.7	1740	1.9	15.0	71-80-90-100-112-132	5710	5710	15500	17800	3750	3400
	GTN01 L3	63.2	7.9	1780	1.6	15.0	71-80-90-100-112-132	6110	6110	16500	19000	4020	3400
	GTN01 L3	69.9	7.2	1300	1.1	15.0	71-80-90-100-112-132	6310	6310	17000	19500	4150	3400
	GTN01 L3	77.5	6.5	1830	1.4	15.0	71-80-90-100-112-132	6540	6540	17500	20100	4300	3400
	GTN01 L3	85.6	5.8	1850	1.2	15.0	71-80-90-100-112-132	6760	6760	18100	20800	4440	3400
	GTN01 L3	105	4.8	1910	1.0	15.0	71-80-90-100-112-132	7230	7230	19200	22100	4750	3400
	GTN01 L3	116	4.3	1330	0.66	15.0	71-80-90-100-112-132	7470	7470	19800	22700	4910	3400
	GTN01 L3	131	3.8	1980	0.87	15.0	71-80-90-100-112-132	7780	7780	20500	23600	5120	3400
	GTN01 L3	142	3.5	2010	0.81	15.0	71-80-90-100-112-132	8000	8000	21000	24200	5260	3400
	GTN01 L3	177	2.8	2090	0.68	15.0	71-80-90-100-112-132	8610	8610	22500	25800	5660	3400
	GTN01 L3	192	2.6	1450	0.43	15.0	71-80-90-100-112-132	8850	8850	23000	26500	5820	3400
	GTN01 L3	221	2.3	2000	0.52	15.0	71-80-90-100-112-132	9270	9270	24000	27600	6090	3400
	GTN01 L3	240	2.1	1510	0.36	15.0	71-80-90-100-112-132	9520	9520	24600	28300	6260	3400
	GTN01 L3	299	1.7	1570	0.30	15.0	71-80-90-100-112-132	10300	10300	26300	30200	6740	3400
	GTN01 L3	374	1.3	1630	0.25	15.0	71-80-90-100-112-132	11000	11000	28100	32300	7260	3400
	GTN01 L4	330	1.5	2310	0.41	12.0	71-80-90-100-112-132	10600	10600	27100	31100	6970	3400
	GTN01 L4	403	1.2	1650	0.24	12.0	71-80-90-100-112-132	11300	11300	28800	33000	7450	3400
	GTN01 L4	447	1.1	2420	0.32	12.0	71-80-90-100-112-132	11700	11700	29700	34000	7710	3400
	GTN01 L4	494	1.0	2460	0.29	12.0	71-80-90-100-112-132	12000	12100	30600	34000	7970	3400
	GTN01 L4	558	0.90	2460	0.26	12.0	71-80-90-100-112-132	12000	12500	31000	34000	8000	3400
	GTN01 L4	616	0.81	2460	0.24	12.0	71-80-90-100-112-132	12000	12500	31000	34000	8000	3400
	GTN01 L4	755	0.66	2460	0.19	12.0	71-80-90-100-112-132	12000	12500	31000	34000	8000	3400
	GTN01 L4	819	0.61	2460	0.18	12.0	71-80-90-100-112-132	12000	12500	31000	34000	8000	3400
	GTN01 L4	942	0.53	2460	0.15	12.0	71-80-90-100-112-132	12000	12500	31000	34000	8000	3400
	GTN01 L4	1022	0.49	2460	0.14	12.0	71-80-90-100-112-132	12000	12500	31000	34000	8000	3400
	GTN01 L4	1108	0.45	1720	0.09	12.0	71-80-90-100-112-132	12000	12500	31000	34000	8000	3400
	GTN01 L4	1275	0.39	2460	0.11	12.0	71-80-90-100-112-132	12000	12500	31000	34000	8000	3400
	GTN01 L4	1383	0.36	1720	0.07	12.0	71-80-90-100-112-132	12000	12500	31000	34000	8000	3400
	GTN01 L4	1591	0.31	2000	0.07	12.0	71-80-90-100-112-132	12000	12500	31000	34000	8000	3400
	GTN01 L4	1725	0.29	1720	0.06	12.0	71-80-90-100-112-132	12000	12500	31000	34000	8000	3400
	GTN01 L4	2153	0.23	1720	0.05	12.0	71-80-90-100-112-132	12000	12500	31000	34000	8000	3400
	GTN01 L4	2692	0.19	1720	0.04	12.0	71-80-90-100-112-132	12000	12500	31000	34000	8000	3400

GTN03 L — 2970 Nm

n_1 min^{-1}		i	n_2 min^{-1}	M_{n2} Nm	P_{n1} kW	Pt kW	P (IEC)	Rn_2 [N] LK	LS	HK/MK	HS/MS	LSH	$M_{2\,max}$ Nm
1500	GTN03 L1	3.60	417	1380	40	11.0	132-160-180-200	5010	5780	10300	12300	3210	5200
	GTN03 L1	4.25	353	1430	40	11.0	132-160-180-200	5290	6110	10800	13000	3400	5200
	GTN03 L1	5.33	281	1490	40	11.0	132-160-180-200	5710	6590	11500	13900	3660	5200
	GTN03 L1	6.20	242	1400	36	11.0	132-160-180-200	6000	6930	12100	14500	3850	5200
	GTN03 L1	7.50	200	1220	26	11.0	132-160-180-200	6400	7390	12800	15400	4100	5200
	GTN03 L1	9.67	155	750	12.6	11.0	132-160-180-200	6960	8040	13800	16600	4470	5200
	GTN03 L2	12.5	120	1640	20.0	9.0	71-80-90-100-112-132-160	7590	8760	14900	17900	4870	5200

GTN03 L — 2970 Nm

n_1 min^{-1}		i	n_2 min^{-1}	M_{n2} Nm	P_{n1} kW	Pt kW	P (IEC)	Rn_2 [N] LK	LS	HK/MK	HS/MS	LSH	$M_{2\,max}$ Nm
1500	GTN03 L2	15.3	98	1710	18.6	9.0	71-80-90-100-112-132-160	8120	9380	15800	19100	5210	5200
	GTN03 L2	18.1	83	2020	18.6	9.0	71-80-90-100-112-132-160	8580	9910	16600	20000	5510	5200
	GTN03 L2	20.8	72	1820	14.6	9.0	71-80-90-100-112-132-160	8980	10400	17300	20900	5760	5200
	GTN03 L2	22.7	66	2100	15.4	9.0	71-80-90-100-112-132-160	9260	10700	17800	21400	5940	5200
	GTN03 L2	24.5	61	2150	14.6	9.0	71-80-90-100-112-132-160	9490	11000	18200	21900	6090	5200
	GTN03 L2	26.4	57	1820	11.5	9.0	71-80-90-100-112-132-160	9740	11200	18600	22400	6250	5200
	GTN03 L2	30.8	49	2140	11.6	9.0	71-80-90-100-112-132-160	10200	11800	19500	23500	6570	5200
	GTN03 L2	35.8	42	1820	8.5	9.0	71-80-90-100-112-132-160	10800	12400	20400	24600	6910	5200
	GTN03 L2	38.4	39	2150	9.3	9.0	71-80-90-100-112-132-160	11000	12700	20900	25100	7070	5200
	GTN03 L3	44.6	34	1820	6.8	9.0	71-80-90-100-112-132-160	11600	13400	21800	26300	7440	5200
	GTN03 L3	55.8	26.9	1820	5.4	9.0	71-80-90-100-112-132-160	12500	14400	23300	28100	8010	5200
	GTN03 L3	53.4	28.1	2170	7.0	7.5	71-80-90-100-112-132-160	12300	14200	23000	27700	7900	5200
	GTN03 L3	63.1	23.8	2510	6.8	7.5	71-80-90-100-112-132-160	13000	15000	24200	29100	8340	5200
	GTN03 L3	72.3	20.8	2230	5.3	7.5	71-80-90-100-112-132-160	13600	15700	25200	30300	8730	5200
	GTN03 L3	77.2	19.4	2520	5.6	7.5	71-80-90-100-112-132-160	13900	16100	25700	30900	8930	5200
	GTN03 L3	90.2	16.6	2250	4.3	7.5	71-80-90-100-112-132-160	14700	16900	26900	32400	9400	5200
	GTN03 L3	105	14.4	2580	4.2	7.5	71-80-90-100-112-132-160	15400	17800	28200	33900	9880	5200
	GTN03 L3	113	13.3	1820	2.8	7.5	71-80-90-100-112-132-160	15800	18200	28800	34700	10100	5200
	GTN03 L3	124	12.1	1820	2.5	7.5	71-80-90-100-112-132-160	16300	18800	29700	35700	10500	5200
	GTN03 L3	141	10.6	2610	3.2	7.5	71-80-90-100-112-132-160	17000	19700	30800	37100	10900	5200
	GTN03 L3	152	9.8	1820	2.1	7.5	71-80-90-100-112-132-160	17500	20200	31500	37900	11200	5200
	GTN03 L3	164	9.2	2200	2.3	7.5	71-80-90-100-112-132-160	17900	20600	32200	38800	11500	5200
	GTN03 L3	178	8.5	2210	2.1	7.5	71-80-90-100-112-132-160	18400	21200	33000	39700	11800	5200
	GTN03 L3	190	7.9	1830	1.7	7.5	71-80-90-100-112-132-160	18800	21700	33700	40600	12100	5200
	GTN03 L3	220	6.8	2250	1.8	7.5	71-80-90-100-112-132-160	19700	22800	35200	42400	12700	5200
	GTN03 L3	258	5.8	1840	1.2	7.5	71-80-90-100-112-132-160	20800	24000	36900	44400	13300	5200
	GTN03 L3	276	5.4	2230	1.4	7.5	71-80-90-100-112-132-160	21300	24600	37700	45400	13700	5200
	GTN03 L3	321	4.7	1860	1.00	7.5	71-80-90-100-112-132-160	22400	25800	39400	47500	14400	5200
	GTN03 L3	389	3.9	1690	0.75	7.5	71-80-90-100-112-132-160	23900	27500	41800	50300	15300	5200
	GTN03 L3	402	3.7	1940	0.83	7.5	71-80-90-100-112-132-160	24100	27800	42200	50700	15500	5200
	GTN03 L4	413	3.6	2360	1.0	6.0	71-80-90-100-112-132-160	24300	28100	42500	51200	15600	5200
	GTN03 L4	446	3.4	2810	1.1	6.0	71-80-90-100-112-132-160	25000	28800	43500	52400	16000	5200
	GTN03 L4	492	3.0	2690	0.97	6.0	71-80-90-100-112-132-160	25800	29800	44800	53900	16600	5200
	GTN03 L4	556	2.7	2810	0.90	6.0	71-80-90-100-112-132-160	26900	31000	46500	55900	17200	5200
	GTN03 L4	649	2.3	2320	0.63	6.0	71-80-90-100-112-132-160	28300	32700	48700	58600	18200	5200
	GTN03 L4	718	2.1	2150	0.53	6.0	71-80-90-100-112-132-160	29300	33800	50200	60400	18800	5200
	GTN03 L4	816	1.8	2720	0.59	6.0	71-80-90-100-112-132-160	30500	35300	52200	62800	19600	5200
	GTN03 L4	896	1.7	2230	0.44	6.0	71-80-90-100-112-132-160	31500	36400	53700	64600	20200	5200
	GTN03 L4	1018	1.5	2740	0.48	6.0	71-80-90-100-112-132-160	32900	38000	55800	67100	21100	5200
	GTN03 L4	1098	1.4	2310	0.37	6.0	71-80-90-100-112-132-160	33700	38900	57000	68600	21600	5200
	GTN03 L4	1278	1.2	2790	0.39	6.0	71-80-90-100-112-132-160	35500	40900	59700	71800	22800	5200
	GTN03 L4	1370	1.1	2400	0.31	6.0	71-80-90-100-112-132-160	36000	41900	60900	73300	23300	5200
	GTN03 L4	1586	0.95	2250	0.25	6.0	71-80-90-100-112-132-160	36000	42000	63700	74000	24000	5200
	GTN03 L4	1854	0.81	2440	0.23	6.0	71-80-90-100-112-132-160	36000	42000	64000	74000	24000	5200
	GTN03 L4	1991	0.75	2850	0.25	6.0	71-80-90-100-112-132-160	36000	42000	64000	74000	24000	5200
	GTN03 L4	2243	0.67	2000	0.16	6.0	71-80-90-100-112-132-160	36000	42000	64000	74000	24000	5200
	GTN03 L4	2799	0.54	2000	0.13	6.0	71-80-90-100-112-132-160	36000	42000	64000	74000	24000	5200
1000	GTN03 L1	3.60	278	1560	40	13.2	132-160-180-200	5730	6620	11600	13900	3680	5200
	GTN03 L1	4.25	235	1620	40	13.2	132-160-180-200	6060	7000	12200	14600	3890	5200
	GTN03 L1	5.33	188	1680	34	13.2	132-160-180-200	6540	7550	13000	15700	4190	5200
	GTN03 L1	6.20	161	1580	27	13.2	132-160-180-200	6870	7930	13600	16400	4410	5200
	GTN03 L1	7.50	133	1380	19.8	13.2	132-160-180-200	7320	8450	14400	17400	4700	5200
	GTN03 L1	9.67	103	850	9.5	13.2	132-160-180-200	7970	9200	15600	18700	5110	5200
	GTN03 L2	12.5	80	1850	16.4	10.8	71-80-90-100-112-132-160	8690	10000	16800	20300	5570	5200
	GTN03 L2	15.3	65	1940	14.0	10.8	71-80-90-100-112-132-160	9300	10700	17900	21500	5960	5200
	GTN03 L2	18.1	55	2280	14.0	10.8	71-80-90-100-112-132-160	9830	11300	18800	22600	6300	5200
	GTN03 L2	20.8	48	2030	10.9	10.8	71-80-90-100-112-132-160	10300	11900	19600	23600	6600	5200
	GTN03 L2	22.7	44	2140	10.5	10.8	71-80-90-100-112-132-160	10600	12200	20100	24200	6800	5200
	GTN03 L2	24.5	41	2320	10.5	10.8	71-80-90-100-112-132-160	10900	12500	20600	24800	6970	5200
	GTN03 L2	26.4	38	1820	7.7	10.8	71-80-90-100-112-132-160	11100	12900	21100	25300	7150	5200
	GTN03 L2	30.8	33	2160	7.8	10.8	71-80-90-100-112-132-160	11700	13500	22000	26500	7520	5200
	GTN03 L2	35.8	28.0	1820	5.7	10.8	71-80-90-100-112-132-160	12300	14200	23100	27700	7910	5200
	GTN03 L2	38.4	26.0	2160	6.3	10.8	71-80-90-100-112-132-160	12600	14600	23600	28300	8100	5200

B

GTN03 L — 2970 Nm

n_1 min^{-1}		i	n_2 min^{-1}	M_{n2} Nm	P_{n1} kW	Pt kW	P (IEC)	Rn_2 [N] LK	LS	HK/MK	HS/MS	LSH	$M_{2\,max}$ Nm
1000	GTN03 L2	44.6	22.4	1820	4.5	10.8	71-80-90-100-112-132-160	13300	15300	24600	29600	8510	5200
	GTN03 L2	55.8	17.9	1820	3.6	10.8	71-80-90-100-112-132-160	14300	16500	26300	31700	9170	5200
	GTN03 L3	53.4	18.7	2230	4.8	9.0	71-80-90-100-112-132-160	14100	16300	26000	31300	9040	5200
	GTN03 L3	63.1	15.9	2570	4.7	9.0	71-80-90-100-112-132-160	14900	17200	27300	32900	9550	5200
	GTN03 L3	72.3	13.8	2270	3.6	9.0	71-80-90-100-112-132-160	15600	18000	28500	34300	10000	5200
	GTN03 L3	77.2	12.9	2600	3.9	9.0	71-80-90-100-112-132-160	15900	18400	29000	34900	10200	5200
	GTN03 L3	90.2	11.1	2300	2.9	9.0	71-80-90-100-112-132-160	16800	19400	30400	36600	10800	5200
	GTN03 L3	105	9.6	2660	2.9	9.0	71-80-90-100-112-132-160	17600	20300	31800	38300	11300	5200
	GTN03 L3	113	8.9	1820	1.9	9.0	71-80-90-100-112-132-160	18100	20900	32500	39100	11600	5200
	GTN03 L3	124	8.0	1830	1.7	9.0	71-80-90-100-112-132-160	18700	21600	33500	40300	12000	5200
	GTN03 L3	141	7.1	2630	2.1	9.0	71-80-90-100-112-132-160	19500	22500	34800	41900	12500	5200
	GTN03 L3	152	6.6	1830	1.4	9.0	71-80-90-100-112-132-160	20000	23100	35600	42900	12800	5200
	GTN03 L3	164	6.1	2220	1.6	9.0	71-80-90-100-112-132-160	20500	23600	36400	43800	13100	5200
	GTN03 L3	178	5.6	2220	1.4	9.0	71-80-90-100-112-132-160	21000	24300	37300	44900	13500	5200
	GTN03 L3	190	5.3	1840	1.1	9.0	71-80-90-100-112-132-160	21500	24800	38100	45800	13800	5200
	GTN03 L3	220	4.5	2240	1.2	9.0	71-80-90-100-112-132-160	22600	26100	39800	47900	14500	5200
	GTN03 L3	258	3.9	1920	0.86	9.0	71-80-90-100-112-132-160	23800	27500	41700	50200	15300	5200
	GTN03 L3	276	3.6	2330	0.97	9.0	71-80-90-100-112-132-160	24400	28100	42600	51200	15600	5200
	GTN03 L3	321	3.1	2000	0.71	9.0	71-80-90-100-112-132-160	25600	29600	44600	53600	16400	5200
	GTN03 L3	389	2.6	1750	0.52	9.0	71-80-90-100-112-132-160	27300	31500	47200	56800	17500	5200
	GTN03 L3	402	2.5	2080	0.59	9.0	71-80-90-100-112-132-160	27600	31900	47600	57300	17700	5200
	GTN03 L4	413	2.4	2530	0.72	7.2	71-80-90-100-112-132-160	27900	32200	48000	57800	17900	5200
	GTN03 L4	446	2.2	2830	0.75	7.2	71-80-90-100-112-132-160	28600	33000	49100	59100	18300	5200
	GTN03 L4	492	2.0	2720	0.65	7.2	71-80-90-100-112-132-160	29500	34100	50600	60900	19000	5200
	GTN03 L4	556	1.8	2870	0.61	7.2	71-80-90-100-112-132-160	30800	35500	52500	63200	19700	5200
	GTN03 L4	649	1.5	2360	0.43	7.2	71-80-90-100-112-132-160	32400	37400	55000	66200	20800	5200
	GTN03 L4	718	1.4	2300	0.38	7.2	71-80-90-100-112-132-160	33500	38700	56700	68200	21500	5200
	GTN03 L4	816	1.2	2750	0.40	7.2	71-80-90-100-112-132-160	35000	40400	58900	70900	22400	5200
	GTN03 L4	896	1.1	2390	0.32	7.2	71-80-90-100-112-132-160	36000	41600	60600	72900	23100	5200
	GTN03 L4	1018	0.98	2770	0.32	7.2	71-80-90-100-112-132-160	36000	42000	63000	74000	24000	5200
	GTN03 L4	1098	0.91	2440	0.26	7.2	71-80-90-100-112-132-160	36000	42000	64000	74000	24000	5200
	GTN03 L4	1278	0.78	2850	0.26	7.2	71-80-90-100-112-132-160	36000	42000	64000	74000	24000	5200
	GTN03 L4	1370	0.73	2440	0.21	7.2	71-80-90-100-112-132-160	36000	42000	64000	74000	24000	5200
	GTN03 L4	1586	0.63	2250	0.17	7.2	71-80-90-100-112-132-160	36000	42000	64000	74000	24000	5200
	GTN03 L4	1854	0.54	2440	0.16	7.2	71-80-90-100-112-132-160	36000	42000	64000	74000	24000	5200
	GTN03 L4	1991	0.50	2850	0.17	7.2	71-80-90-100-112-132-160	36000	42000	64000	74000	24000	5200
	GTN03 L4	2243	0.45	2000	0.11	7.2	71-80-90-100-112-132-160	36000	42000	64000	74000	24000	5200
	GTN03 L4	2799	0.36	2000	0.08	7.2	71-80-90-100-112-132-160	36000	42000	64000	74000	24000	5200
500	GTN03 L1	3.60	139	1920	29	22	132-160-180-200	7220	8340	14300	17200	4630	5200
	GTN03 L1	4.25	118	1990	25	22	132-160-180-200	7630	8810	15000	18000	4900	5200
	GTN03 L1	5.33	94	2040	21	22	132-160-180-200	8240	9510	16000	19300	5280	5200
	GTN03 L1	6.20	81	1820	15.8	22	132-160-180-200	8660	10000	16800	20200	5560	5200
	GTN03 L1	7.50	67	1590	11.4	22	132-160-180-200	9230	10700	17800	21400	5920	5200
	GTN03 L1	9.67	52	860	4.8	22	132-160-180-200	10000	11600	19200	23100	6440	5200
	GTN03 L2	12.5	40	2150	9.6	18.0	71-80-90-100-112-132-160	10900	12600	20700	24900	7020	5200
	GTN03 L2	15.3	33	2150	7.8	18.0	71-80-90-100-112-132-160	11700	13500	22000	26500	7510	5200
	GTN03 L2	18.1	27.6	2460	7.5	18.0	71-80-90-100-112-132-160	12400	14300	23100	27800	7940	5200
	GTN03 L2	20.8	24.1	2110	5.7	18.0	71-80-90-100-112-132-160	13000	15000	24100	29000	8310	5200
	GTN03 L2	22.7	22.0	2170	5.3	18.0	71-80-90-100-112-132-160	13400	15400	24800	29800	8570	5200
	GTN03 L2	24.5	20.4	2460	5.6	18.0	71-80-90-100-112-132-160	13700	15800	25300	30500	8780	5200
	GTN03 L2	26.4	18.9	1820	3.8	18.0	71-80-90-100-112-132-160	14000	16200	25900	31200	9010	5200
	GTN03 L2	30.8	16.3	2180	3.9	18.0	71-80-90-100-112-132-160	14800	17100	27100	32600	9480	5200
	GTN03 L2	35.8	14.0	1820	2.8	18.0	71-80-90-100-112-132-160	15500	17900	28400	34200	9960	5200
	GTN03 L2	38.4	13.0	2190	3.2	18.0	71-80-90-100-112-132-160	15900	18400	29000	34900	10200	5200
	GTN03 L2	44.6	11.2	1820	2.3	18.0	71-80-90-100-112-132-160	16700	19300	30300	36500	10700	5200
	GTN03 L2	55.8	9.0	1820	1.8	18.0	71-80-90-100-112-132-160	18000	20800	32400	39000	11600	5200
	GTN03 L3	53.4	9.4	2310	2.5	15.0	71-80-90-100-112-132-160	17800	20500	32000	38500	11400	5200
	GTN03 L3	63.1	7.9	2700	2.5	15.0	71-80-90-100-112-132-160	18800	21700	33600	40500	12000	5200
	GTN03 L3	72.3	6.9	2310	1.8	15.0	71-80-90-100-112-132-160	19600	22700	35100	42200	12600	5200
	GTN03 L3	77.2	6.5	2750	2.0	15.0	71-80-90-100-112-132-160	20100	23200	35800	43000	12900	5200
	GTN03 L3	90.2	5.5	2310	1.5	15.0	71-80-90-100-112-132-160	21100	24400	37500	45100	13600	5200
	GTN03 L3	105	4.8	2810	1.5	15.0	71-80-90-100-112-132-160	22200	25600	39200	47100	14200	5200

B

GTN03 L — 2970 Nm

n_1 min^{-1}		i	n_2 min^{-1}	M_{n2} Nm	P_{n1} kW	Pt kW	P (IEC)	Rn_2 [N] LK	LS	HK/MK	HS/MS	LSH	$M_{2\,max}$ Nm
500	GTN03 L3	113	4.4	1880	0.96	15.0	71-80-90-100-112-132-160	22800	26300	40100	48200	14600	5200
	GTN03 L3	124	4.0	1910	0.88	15.0	71-80-90-100-112-132-160	23500	27200	41300	49600	15100	5200
	GTN03 L3	141	3.5	2670	1.1	15.0	71-80-90-100-112-132-160	24600	28400	42900	51600	15800	5200
	GTN03 L3	152	3.3	1980	0.75	15.0	71-80-90-100-112-132-160	25200	29100	43900	52800	16200	5200
	GTN03 L3	164	3.1	2430	0.85	15.0	71-80-90-100-112-132-160	25800	29800	44800	53900	16500	5200
	GTN03 L3	178	2.8	2470	0.80	15.0	71-80-90-100-112-132-160	26500	30600	45900	55200	17000	5200
	GTN03 L3	190	2.6	2060	0.62	15.0	71-80-90-100-112-132-160	27100	31300	46900	56400	17400	5200
	GTN03 L3	220	2.3	2210	0.57	15.0	71-80-90-100-112-132-160	28500	32900	49000	58900	18300	5200
	GTN03 L3	258	1.9	2170	0.48	15.0	71-80-90-100-112-132-160	30000	34600	51300	61700	19200	5200
	GTN03 L3	276	1.8	2580	0.54	15.0	71-80-90-100-112-132-160	30700	35400	52400	63100	19700	5200
	GTN03 L3	321	1.6	2260	0.40	15.0	71-80-90-100-112-132-160	32300	37300	54900	66000	20700	5200
	GTN03 L3	389	1.3	1930	0.28	15.0	71-80-90-100-112-132-160	34400	39700	58100	69900	22100	5200
	GTN03 L3	402	1.2	2350	0.34	15.0	71-80-90-100-112-132-160	34800	40200	58600	70600	22300	5200
	GTN03 L4	413	1.2	2780	0.40	12.0	71-80-90-100-112-132-160	35100	40500	59100	71200	22500	5200
	GTN03 L4	446	1.1	2950	0.39	12.0	71-80-90-100-112-132-160	36000	41600	60500	72800	23100	5200
	GTN03 L4	492	1.0	2770	0.33	12.0	71-80-90-100-112-132-160	36000	42000	62300	74000	23900	5200
	GTN03 L4	556	0.90	2970	0.32	12.0	71-80-90-100-112-132-160	36000	42000	64000	74000	24000	5200
	GTN03 L4	649	0.77	2410	0.22	12.0	71-80-90-100-112-132-160	36000	42000	64000	74000	24000	5200
	GTN03 L4	718	0.70	2440	0.20	12.0	71-80-90-100-112-132-160	36000	42000	64000	74000	24000	5200
	GTN03 L4	816	0.61	2770	0.20	12.0	71-80-90-100-112-132-160	36000	42000	64000	74000	24000	5200
	GTN03 L4	896	0.56	2440	0.16	12.0	71-80-90-100-112-132-160	36000	42000	64000	74000	24000	5200
	GTN03 L4	1018	0.49	2770	0.16	12.0	71-80-90-100-112-132-160	36000	42000	64000	74000	24000	5200
	GTN03 L4	1098	0.46	2440	0.13	12.0	71-80-90-100-112-132-160	36000	42000	64000	74000	24000	5200
	GTN03 L4	1278	0.39	2850	0.13	12.0	71-80-90-100-112-132-160	36000	42000	64000	74000	24000	5200
	GTN03 L4	1370	0.36	2440	0.11	12.0	71-80-90-100-112-132-160	36000	42000	64000	74000	24000	5200
	GTN03 L4	1586	0.32	2250	0.08	12.0	71-80-90-100-112-132-160	36000	42000	64000	74000	24000	5200
	GTN03 L4	1854	0.27	2440	0.08	12.0	71-80-90-100-112-132-160	36000	42000	64000	74000	24000	5200
	GTN03 L4	1991	0.25	2850	0.08	12.0	71-80-90-100-112-132-160	36000	42000	64000	74000	24000	5200
	GTN03 L4	2243	0.22	2000	0.05	12.0	71-80-90-100-112-132-160	36000	42000	64000	74000	24000	5200
	GTN03 L4	2799	0.18	2000	0.04	12.0	71-80-90-100-112-132-160	36000	42000	64000	74000	24000	5200

GTN04 L — 3960 Nm

n_1 min^{-1}		i	n_2 min^{-1}	M_{n2} Nm	P_{n1} kW	Pt kW	P (IEC)	Rn_2 [N] LK	LS	HK/MK	HS/MS	LSH	$M_{2\,max}$ Nm
1500	GTN04 L1	3.60	417	1840	50	12.0	132-160-180-200	5010	5780	10300	12300	3210	7300
	GTN04 L1	4.25	353	1900	50	12.0	132-160-180-200	5290	6110	10800	13000	3400	7300
	GTN04 L1	5.33	281	1990	50	12.0	132-160-180-200	5710	6590	11500	13900	3660	7300
	GTN04 L1	6.57	228	1870	46	12.0	132-160-180-200	6120	7070	12300	14800	3930	7300
	GTN04 L2	12.5	120	2680	30	9.0	71-80-90-100-112-132-160	7590	8760	14900	17900	4870	7300
	GTN04 L2	15.3	98	2840	30	9.0	71-80-90-100-112-132-160	8120	9380	15800	19100	5210	7300
	GTN04 L2	18.1	83	2940	27	9.0	71-80-90-100-112-132-160	8580	9910	16600	20000	5510	7300
	GTN04 L2	20.8	72	2960	24	9.0	71-80-90-100-112-132-160	8980	10400	17300	20900	5760	7300
	GTN04 L2	22.7	66	2790	21	9.0	71-80-90-100-112-132-160	9260	10700	17800	21400	5940	7300
	GTN04 L2	24.5	61	3230	22	9.0	71-80-90-100-112-132-160	9490	11000	18200	21900	6090	7300
	GTN04 L2	30.8	49	2850	15.5	9.0	71-80-90-100-112-132-160	10200	11800	19500	23500	6570	7300
	GTN04 L2	38.4	39	2850	12.4	9.0	71-80-90-100-112-132-160	11000	12700	20900	25100	7070	7300
	GTN04 L2	47.3	32	2390	8.4	9.0	71-80-90-100-112-132-160	11800	13600	22200	26700	7580	7300
	GTN04 L2	59.1	25.4	2390	6.7	9.0	71-80-90-100-112-132-160	12700	14700	23700	28600	8170	7300
	GTN04 L3	43.6	34	3190	12.6	7.5	71-80-90-100-112-132-160	11500	13300	21700	26100	7380	7300
	GTN04 L3	53.4	28.1	3230	10.4	7.5	71-80-90-100-112-132-160	12300	14200	23000	27700	7900	7300
	GTN04 L3	63.1	23.8	3480	9.5	7.5	71-80-90-100-112-132-160	13000	15000	24200	29100	8340	7300
	GTN04 L3	72.3	20.8	3290	7.8	7.5	71-80-90-100-112-132-160	13600	15700	25200	30300	8730	7300
	GTN04 L3	77.2	19.4	3490	7.8	7.5	71-80-90-100-112-132-160	13900	16100	25700	30900	8930	7300
	GTN04 L3	90.2	16.6	3320	6.3	7.5	71-80-90-100-112-132-160	14700	16900	26900	32400	9400	7300
	GTN04 L3	105	14.4	3520	5.8	7.5	71-80-90-100-112-132-160	15400	17800	28200	33900	9880	7300
	GTN04 L3	111	13.6	3380	5.3	7.5	71-80-90-100-112-132-160	15700	18100	28600	34500	10100	7300
	GTN04 L3	130	11.5	3530	4.7	7.5	71-80-90-100-112-132-160	16600	19100	30100	36200	10600	7300
	GTN04 L3	141	10.6	3540	4.3	7.5	71-80-90-100-112-132-160	17000	19700	30800	37100	10900	7300
	GTN04 L3	150	10.0	3440	4.0	7.5	71-80-90-100-112-132-160	17300	20000	31400	37700	11100	7300

B

GTN04 L — 3960 Nm

n_1 min^{-1}		i	n_2 min^{-1}	M_{n2} Nm	P_{n1} kW	Pt kW	P (IEC)	Rn_2 [N] LK	LS	HK/MK	HS/MS	LSH	$M_{2\,max}$ Nm
1500	GTN04 L3	165	9.1	2390	2.5	7.5	71-80-90-100-112-132-160	17900	20700	32300	38800	11500	7300
	GTN04 L3	178	8.5	2850	2.8	7.5	71-80-90-100-112-132-160	18400	21200	33000	39700	11800	7300
	GTN04 L3	202	7.4	2390	2.0	7.5	71-80-90-100-112-132-160	19200	22100	34300	41300	12300	7300
	GTN04 L3	220	6.8	3610	2.8	7.5	71-80-90-100-112-132-160	19700	22800	35200	42400	12700	7300
	GTN04 L3	273	5.5	2390	1.5	7.5	71-80-90-100-112-132-160	21200	24500	37600	45200	13600	7300
	GTN04 L3	341	4.4	2420	1.2	7.5	71-80-90-100-112-132-160	22800	26400	40200	48300	14700	7300
	GTN04 L3	426	3.5	2470	1.0	7.5	71-80-90-100-112-132-160	24600	28400	42900	51600	15800	7300
	GTN04 L4	413	3.6	3000	1.3	6.0	71-80-90-100-112-132-160	24300	28100	42500	51200	15600	7300
	GTN04 L4	446	3.4	3720	1.5	6.0	71-80-90-100-112-132-160	25000	28800	43500	52400	16000	7300
	GTN04 L4	492	3.0	3730	1.3	6.0	71-80-90-100-112-132-160	25800	29800	44800	53900	16600	7300
	GTN04 L4	556	2.7	3740	1.2	6.0	71-80-90-100-112-132-160	26900	31000	46500	55900	17200	7300
	GTN04 L4	649	2.3	3540	0.97	6.0	71-80-90-100-112-132-160	28300	32700	48700	58600	18200	7300
	GTN04 L4	702	2.1	2630	0.66	6.0	71-80-90-100-112-132-160	29000	33500	49900	60000	18600	7300
	GTN04 L4	816	1.8	3820	0.83	6.0	71-80-90-100-112-132-160	30500	35300	52200	62800	19600	7300
	GTN04 L4	1018	1.5	3870	0.67	6.0	71-80-90-100-112-132-160	32900	38000	55800	67100	21100	7300
	GTN04 L4	1164	1.3	2870	0.44	6.0	71-80-90-100-112-132-160	34400	39700	58000	69800	22100	7300
	GTN04 L4	1271	1.2	3920	0.55	6.0	71-80-90-100-112-132-160	35400	40900	59600	71700	22700	7300
	GTN04 L4	1344	1.1	3690	0.49	6.0	71-80-90-100-112-132-160	36000	41600	60600	72900	23100	7300
	GTN04 L4	1586	0.95	3960	0.44	6.0	71-80-90-100-112-132-160	36000	42000	63700	74000	24000	7300
	GTN04 L4	1815	0.83	3000	0.29	6.0	71-80-90-100-112-132-160	36000	42000	64000	74000	24000	7300
	GTN04 L4	1991	0.75	3740	0.33	6.0	71-80-90-100-112-132-160	36000	42000	64000	74000	24000	7300
	GTN04 L4	2269	0.66	3000	0.23	6.0	71-80-90-100-112-132-160	36000	42000	64000	74000	24000	7300
	GTN04 L4	2453	0.61	3000	0.22	6.0	71-80-90-100-112-132-160	36000	42000	64000	74000	24000	7300
1000	GTN04 L1	3.60	278	2080	50	14.4	132-160-180-200	5730	6620	11600	13900	3680	7300
	GTN04 L1	4.25	235	2150	50	14.4	132-160-180-200	6060	7000	12200	14600	3890	7300
	GTN04 L1	5.33	188	2240	45	14.4	132-160-180-200	6540	7550	13000	15700	4190	7300
	GTN04 L1	6.57	152	2110	35	14.4	132-160-180-200	7010	8090	13900	16700	4500	7300
	GTN04 L2	12.5	80	2920	26	10.8	71-80-90-100-112-132-160	8690	10000	16800	20300	5570	7300
	GTN04 L2	15.3	65	3010	22	10.8	71-80-90-100-112-132-160	9300	10700	17900	21500	5960	7300
	GTN04 L2	18.1	55	3330	20	10.8	71-80-90-100-112-132-160	9830	11300	18800	22600	6300	7300
	GTN04 L2	20.8	48	3130	16.8	10.8	71-80-90-100-112-132-160	10300	11900	19600	23600	6600	7300
	GTN04 L2	22.7	44	2850	13.9	10.8	71-80-90-100-112-132-160	10600	12200	20100	24200	6800	7300
	GTN04 L2	24.5	41	3440	15.6	10.8	71-80-90-100-112-132-160	10900	12500	20600	24800	6970	7300
	GTN04 L2	30.8	33	2850	10.3	10.8	71-80-90-100-112-132-160	11700	13500	22000	26500	7520	7300
	GTN04 L2	38.4	26.0	2850	8.3	10.8	71-80-90-100-112-132-160	12600	14600	23600	28300	8100	7300
	GTN04 L2	47.3	21.1	2390	5.6	10.8	71-80-90-100-112-132-160	13500	15600	25100	30200	8680	7300
	GTN04 L2	59.1	16.9	2390	4.5	10.8	71-80-90-100-112-132-160	14600	16800	26800	32300	9350	7300
	GTN04 L3	43.6	22.9	3270	8.6	9.0	71-80-90-100-112-132-160	13200	15200	24500	29400	8450	7300
	GTN04 L3	53.4	18.7	3310	7.1	9.0	71-80-90-100-112-132-160	14100	16300	26000	31300	9040	7300
	GTN04 L3	63.1	15.9	3510	6.4	9.0	71-80-90-100-112-132-160	14900	17200	27300	32900	9550	7300
	GTN04 L3	72.3	13.8	3370	5.4	9.0	71-80-90-100-112-132-160	15600	18000	28500	34300	10000	7300
	GTN04 L3	77.2	12.9	3520	5.2	9.0	71-80-90-100-112-132-160	15900	18400	29000	34900	10200	7300
	GTN04 L3	90.2	11.1	3420	4.3	9.0	71-80-90-100-112-132-160	16800	19400	30400	36600	10800	7300
	GTN04 L3	105	9.6	3550	3.9	9.0	71-80-90-100-112-132-160	17600	20300	31800	38300	11300	7300
	GTN04 L3	111	9.0	3450	3.6	9.0	71-80-90-100-112-132-160	18000	20700	32300	38900	11500	7300
	GTN04 L3	130	7.7	3600	3.2	9.0	71-80-90-100-112-132-160	19000	21900	34000	40900	12200	7300
	GTN04 L3	141	7.1	3610	2.9	9.0	71-80-90-100-112-132-160	19500	22500	34800	41900	12500	7300
	GTN04 L3	150	6.7	3470	2.7	9.0	71-80-90-100-112-132-160	19900	22900	35400	42600	12700	7300
	GTN04 L3	165	6.1	2390	1.7	9.0	71-80-90-100-112-132-160	20500	23700	36500	43900	13200	7300
	GTN04 L3	178	5.6	2850	1.8	9.0	71-80-90-100-112-132-160	21000	24300	37300	44900	13500	7300
	GTN04 L3	202	5.0	2390	1.4	9.0	71-80-90-100-112-132-160	21900	25300	38700	46600	14100	7300
	GTN04 L3	220	4.5	3670	1.9	9.0	71-80-90-100-112-132-160	22600	26100	39800	47900	14500	7300
	GTN04 L3	273	3.7	2460	1.0	9.0	71-80-90-100-112-132-160	24300	28000	42400	51000	15600	7300
	GTN04 L3	341	2.9	2520	0.85	9.0	71-80-90-100-112-132-160	26100	30200	45400	54600	16800	7300
	GTN04 L3	426	2.3	2590	0.70	9.0	71-80-90-100-112-132-160	28100	32500	48500	58300	18100	7300
	GTN04 L4	413	2.4	3210	0.92	7.2	71-80-90-100-112-132-160	27900	32200	48000	57800	17900	7300
	GTN04 L4	446	2.2	3770	1.0	7.2	71-80-90-100-112-132-160	28600	33000	49100	59100	18300	7300
	GTN04 L4	492	2.0	3800	0.91	7.2	71-80-90-100-112-132-160	29500	34100	50600	60900	19000	7300
	GTN04 L4	556	1.8	3820	0.81	7.2	71-80-90-100-112-132-160	30800	35500	52500	63200	19700	7300
	GTN04 L4	649	1.5	3620	0.66	7.2	71-80-90-100-112-132-160	32400	37400	55000	66200	20800	7300
	GTN04 L4	702	1.4	2820	0.48	7.2	71-80-90-100-112-132-160	33200	38400	56300	67800	21300	7300
	GTN04 L4	816	1.2	3910	0.57	7.2	71-80-90-100-112-132-160	35000	40400	58900	70900	22400	7300

B

GTN04 L — 3960 Nm

n_1 min^{-1}		i	n_2 min^{-1}	M_{n2} Nm	P_{n1} kW	Pt kW	P (IEC)	Rn_2 [N] LK	LS	HK/MK	HS/MS	LSH	$M_{2\,max}$ Nm
1000	GTN04 L4	1018	0.98	3960	0.46	7.2	71-80-90-100-112-132-160	36000	42000	63000	74000	24000	7300
	GTN04 L4	1164	0.86	3000	0.30	7.2	71-80-90-100-112-132-160	36000	42000	64000	74000	24000	7300
	GTN04 L4	1271	0.79	3960	0.37	7.2	71-80-90-100-112-132-160	36000	42000	64000	74000	24000	7300
	GTN04 L4	1344	0.74	3710	0.33	7.2	71-80-90-100-112-132-160	36000	42000	64000	74000	24000	7300
	GTN04 L4	1586	0.63	3960	0.30	7.2	71-80-90-100-112-132-160	36000	42000	64000	74000	24000	7300
	GTN04 L4	1815	0.55	3000	0.20	7.2	71-80-90-100-112-132-160	36000	42000	64000	74000	24000	7300
	GTN04 L4	1991	0.50	3740	0.22	7.2	71-80-90-100-112-132-160	36000	42000	64000	74000	24000	7300
	GTN04 L4	2269	0.44	3000	0.16	7.2	71-80-90-100-112-132-160	36000	42000	64000	74000	24000	7300
	GTN04 L4	2453	0.41	3000	0.14	7.2	71-80-90-100-112-132-160	36000	42000	64000	74000	24000	7300
500	GTN04 L1	3.60	139	2560	38	24	132-160-180-200	7220	8340	14300	17200	4630	7300
	GTN04 L1	4.25	118	2650	34	24	132-160-180-200	7630	8810	15000	18000	4900	7300
	GTN04 L1	5.33	94	2720	28	24	132-160-180-200	8240	9510	16000	19300	5280	7300
	GTN04 L1	6.57	76	2390	19.6	24	132-160-180-200	8830	10200	17100	20500	5660	7300
	GTN04 L2	12.5	40	3160	14.0	18.0	71-80-90-100-112-132-160	10900	12600	20700	24900	7020	7300
	GTN04 L2	15.3	33	3200	11.6	18.0	71-80-90-100-112-132-160	11700	13500	22000	26500	7510	7300
	GTN04 L2	18.1	27.6	3470	10.7	18.0	71-80-90-100-112-132-160	12400	14300	23100	27800	7940	7300
	GTN04 L2	20.8	24.1	3260	8.7	18.0	71-80-90-100-112-132-160	13000	15000	24100	29000	8310	7300
	GTN04 L2	22.7	22.0	2850	7.0	18.0	71-80-90-100-112-132-160	13400	15400	24800	29800	8570	7300
	GTN04 L2	24.5	20.4	3490	7.9	18.0	71-80-90-100-112-132-160	13700	15800	25300	30500	8780	7300
	GTN04 L2	30.8	16.3	2850	5.2	18.0	71-80-90-100-112-132-160	14800	17100	27100	32600	9480	7300
	GTN04 L2	38.4	13.0	2850	4.1	18.0	71-80-90-100-112-132-160	15900	18400	29000	34900	10200	7300
	GTN04 L2	47.3	10.6	2390	2.8	18.0	71-80-90-100-112-132-160	17000	19700	30900	37100	10900	7300
	GTN04 L2	59.1	8.5	2390	2.2	18.0	71-80-90-100-112-132-160	18400	21200	33000	39700	11800	7300
	GTN04 L3	43.6	11.5	3410	4.5	15.0	71-80-90-100-112-132-160	16600	19200	30100	36200	10600	7300
	GTN04 L3	53.4	9.4	3450	3.7	15.0	71-80-90-100-112-132-160	17800	20500	32000	38500	11400	7300
	GTN04 L3	63.1	7.9	3590	3.3	15.0	71-80-90-100-112-132-160	18800	21700	33600	40500	12000	7300
	GTN04 L3	72.3	6.9	3470	2.8	15.0	71-80-90-100-112-132-160	19600	22700	35100	42200	12600	7300
	GTN04 L3	77.2	6.5	3630	2.7	15.0	71-80-90-100-112-132-160	20100	23200	35800	43000	12900	7300
	GTN04 L3	90.2	5.5	3490	2.2	15.0	71-80-90-100-112-132-160	21100	24400	37500	45100	13600	7300
	GTN04 L3	105	4.8	3690	2.0	15.0	71-80-90-100-112-132-160	22200	25600	39200	47100	14200	7300
	GTN04 L3	111	4.5	3500	1.8	15.0	71-80-90-100-112-132-160	22600	26100	39800	47900	14500	7300
	GTN04 L3	130	3.8	3710	1.6	15.0	71-80-90-100-112-132-160	23900	27600	41900	50400	15300	7300
	GTN04 L3	141	3.5	3720	1.5	15.0	71-80-90-100-112-132-160	24600	28400	42900	51600	15800	7300
	GTN04 L3	150	3.3	3510	1.3	15.0	71-80-90-100-112-132-160	25000	28900	43600	52500	16000	7300
	GTN04 L3	165	3.0	2510	0.87	15.0	71-80-90-100-112-132-160	25800	29800	44900	54000	16600	7300
	GTN04 L3	178	2.8	3130	1.0	15.0	71-80-90-100-112-132-160	26500	30600	45900	55200	17000	7300
	GTN04 L3	202	2.5	2560	0.73	15.0	71-80-90-100-112-132-160	27600	31900	47700	57400	17700	7300
	GTN04 L3	220	2.3	3740	0.97	15.0	71-80-90-100-112-132-160	28500	32900	49000	58900	18300	7300
	GTN04 L3	273	1.8	2700	0.57	15.0	71-80-90-100-112-132-160	30600	35300	52200	62800	19600	7300
	GTN04 L3	341	1.5	2810	0.47	15.0	71-80-90-100-112-132-160	32900	38000	55800	67200	21100	7300
	GTN04 L3	426	1.2	2920	0.39	15.0	71-80-90-100-112-132-160	35500	40900	59700	71800	22700	7300
	GTN04 L4	413	1.2	3620	0.52	12.0	71-80-90-100-112-132-160	35100	40500	59100	71200	22500	7300
	GTN04 L4	446	1.1	3930	0.52	12.0	71-80-90-100-112-132-160	36000	41600	60500	72800	23100	7300
	GTN04 L4	492	1.0	3960	0.48	12.0	71-80-90-100-112-132-160	36000	42000	62300	74000	23900	7300
	GTN04 L4	556	0.90	3960	0.42	12.0	71-80-90-100-112-132-160	36000	42000	64000	74000	24000	7300
	GTN04 L4	649	0.77	3710	0.34	12.0	71-80-90-100-112-132-160	36000	42000	64000	74000	24000	7300
	GTN04 L4	702	0.71	3000	0.25	12.0	71-80-90-100-112-132-160	36000	42000	64000	74000	24000	7300
	GTN04 L 4	816	0.61	3960	0.29	12.0	71-80-90-100-112-132-160	36000	42000	64000	74000	24000	7300
	GTN04 L4	1018	0.49	3960	0.23	12.0	71-80-90-100-112-132-160	36000	42000	64000	74000	24000	7300
	GTN04 L4	1164	0.43	3000	0.15	12.0	71-80-90-100-112-132-160	36000	42000	64000	74000	24000	7300
	GTN04 L4	1271	0.39	3960	0.18	12.0	71-80-90-100-112-132-160	36000	42000	64000	74000	24000	7300
	GTN04 L4	1344	0.37	3710	0.16	12.0	71-80-90-100-112-132-160	36000	42000	64000	74000	24000	7300
	GTN04 L4	1586	0.32	3960	0.15	12.0	71-80-90-100-112-132-160	36000	42000	64000	74000	24000	7300
	GTN04 L4	1815	0.28	3000	0.10	12.0	71-80-90-100-112-132-160	36000	42000	64000	74000	24000	7300
	GTN04 L4	1991	0.25	3740	0.11	12.0	71-80-90-100-112-132-160	36000	42000	64000	74000	24000	7300
	GTN04 L4	2269	0.22	3000	0.08	12.0	71-80-90-100-112-132-160	36000	42000	64000	74000	24000	7300
	GTN04 L4	2453	0.20	3000	0.07	12.0	71-80-90-100-112-132-160	36000	42000	64000	74000	24000	7300

B

GTN05 L

5800 Nm

n_1 min^{-1}		i	n_2 min^{-1}	M_{n2} Nm	P_{n1} kW	Pt kW	P (IEC)	Rn_2 [N] LK	LS	HK/MK	HS/MS	LSH	$M_{2\,max}$ Nm
1500	GTN05 L1	3.60	417	2370	60	13.0	132-160-180-200	5010	5780	10300	12300	3210	8800
	GTN05 L1	4.25	353	2450	60	13.0	132-160-180-200	5290	6110	10800	13000	3400	8800
	GTN05 L1	5.33	281	2560	60	13.0	132-160-180-200	5710	6590	11500	13900	3660	8800
	GTN05 L1	6.20	242	2650	60	13.0	132-160-180-200	6000	6930	12100	14500	3850	8800
	GTN05 L1	7.50	200	2270	49	13.0	132-160-180-200	6400	7390	12800	15400	4100	8800
	GTN05 L2	12.5	120	2930	30	9.0	71-80-90-100-112-132-160	7590	8760	14900	17900	4870	8800
	GTN05 L2	15.3	98	3060	30	9.0	71-80-90-100-112-132-160	8120	9380	15800	19100	5210	8800
	GTN05 L2	18.1	83	3620	30	9.0	71-80-90-100-112-132-160	8580	9910	16600	20000	5510	8800
	GTN05 L2	20.8	72	3250	26	9.0	71-80-90-100-112-132-160	8980	10400	17300	20900	5760	8800
	GTN05 L2	22.7	66	3940	29	9.0	71-80-90-100-112-132-160	9260	10700	17800	21400	5940	8800
	GTN05 L2	24.5	61	3830	26	9.0	71-80-90-100-112-132-160	9490	11000	18200	21900	6090	8800
	GTN05 L2	26.4	57	3530	22	9.0	71-80-90-100-112-132-160	9740	11200	18600	22400	6250	8800
	GTN05 L2	30.8	49	4280	23	9.0	71-80-90-100-112-132-160	10200	11800	19500	23500	6570	8800
	GTN05 L2	35.8	42	3560	16.6	9.0	71-80-90-100-112-132-160	10800	12400	20400	24600	6910	8800
	GTN05 L2	38.4	39	4300	18.7	9.0	71-80-90-100-112-132-160	11000	12700	20900	25100	7070	8800
	GTN05 L2	44.6	34	3560	13.3	9.0	71-80-90-100-112-132-160	11600	13400	21800	26300	7440	8800
	GTN05 L2	55.8	26.9	3540	10.6	9.0	71-80-90-100-112-132-160	12500	14400	23300	28100	8010	8800
	GTN05 L3	53.4	28.1	4000	12.9	7.5	71-80-90-100-112-132-160	12300	14200	23000	27700	7900	8800
	GTN05 L3	63.1	23.8	4720	12.9	7.5	71-80-90-100-112-132-160	13000	15000	24200	29100	8340	8800
	GTN05 L3	72.3	20.8	4160	9.9	7.5	71-80-90-100-112-132-160	13600	15700	25200	30300	8730	8800
	GTN05 L3	77.2	19.4	4820	10.7	7.5	71-80-90-100-112-132-160	13900	16100	25700	30900	8930	8800
	GTN05 L3	90.2	16.6	4260	8.1	7.5	71-80-90-100-112-132-160	14700	16900	26900	32400	9400	8800
	GTN05 L3	105	14.4	5030	8.3	7.5	71-80-90-100-112-132-160	15400	17800	28200	33900	9880	8800
	GTN05 L3	113	13.3	3590	5.5	7.5	71-80-90-100-112-132-160	15800	18200	28800	34700	10100	8800
	GTN05 L3	124	12.1	3590	5.0	7.5	71-80-90-100-112-132-160	16300	18800	29700	35700	10500	8800
	GTN05 L3	141	10.6	5180	6.3	7.5	71-80-90-100-112-132-160	17000	19700	30800	37100	10900	8800
	GTN05 L3	152	9.8	3600	4.1	7.5	71-80-90-100-112-132-160	17500	20200	31500	37900	11200	8800
	GTN05 L3	164	9.2	4410	4.6	7.5	71-80-90-100-112-132-160	17900	20600	32200	38800	11500	8800
	GTN05 L3	178	8.5	4420	4.3	7.5	71-80-90-100-112-132-160	18400	21200	33000	39700	11800	8800
	GTN05 L3	190	7.9	3600	3.3	7.5	71-80-90-100-112-132-160	18800	21700	33700	40600	12100	8800
	GTN05 L3	220	6.8	4750	3.7	7.5	71-80-90-100-112-132-160	19700	22800	35200	42400	12700	8800
	GTN05 L3	258	5.8	3600	2.4	7.5	71-80-90-100-112-132-160	20800	24000	36900	44400	13300	8800
	GTN05 L3	276	5.4	4460	2.8	7.5	71-80-90-100-112-132-160	21300	24600	37700	45400	13700	8800
	GTN05 L3	321	4.7	3640	1.9	7.5	71-80-90-100-112-132-160	22400	25800	39400	47500	14400	8800
	GTN05 L3	389	3.9	3170	1.4	7.5	71-80-90-100-112-132-160	23900	27500	41800	50300	15300	8800
	GTN05 L3	402	3.7	3760	1.6	7.5	71-80-90-100-112-132-160	24100	27800	42200	50700	15500	8800
	GTN05 L4	413	3.6	4720	2.0	6.0	71-80-90-100-112-132-160	24300	28100	42500	51200	15600	8800
	GTN05 L4	446	3.4	5490	2.2	6.0	71-80-90-100-112-132-160	25000	28800	43500	52400	16000	8800
	GTN05 L4	492	3.0	5340	1.9	6.0	71-80-90-100-112-132-160	25800	29800	44800	53900	16600	8800
	GTN05 L4	556	2.7	5500	1.8	6.0	71-80-90-100-112-132-160	26900	31000	46500	55900	17200	8800
	GTN05 L4	649	2.3	4510	1.2	6.0	71-80-90-100-112-132-160	28300	32700	48700	58600	18200	8800
	GTN05 L4	718	2.1	4130	1.0	6.0	71-80-90-100-112-132-160	29300	33800	50200	60400	18800	8800
	GTN05 L4	816	1.8	5410	1.2	6.0	71-80-90-100-112-132-160	30500	35300	52200	62800	19600	8800
	GTN05 L4	896	1.7	4290	0.85	6.0	71-80-90-100-112-132-160	31500	36400	53700	64600	20200	8800
	GTN05 L4	1018	1.5	5450	0.95	6.0	71-80-90-100-112-132-160	32900	38000	55800	67100	21100	8800
	GTN05 L4	1098	1.4	4440	0.72	6.0	71-80-90-100-112-132-160	33700	38900	57000	68600	21600	8800
	GTN05 L4	1278	1.2	5500	0.76	6.0	71-80-90-100-112-132-160	35500	40900	59700	71800	22800	8800
	GTN05 L4	1370	1.1	4620	0.60	6.0	71-80-90-100-112-132-160	36000	41900	60900	73300	23300	8800
	GTN05 L4	1586	0.95	4750	0.53	6.0	71-80-90-100-112-132-160	36000	42000	63700	74000	24000	8800
	GTN05 L4	1854	0.81	4690	0.45	6.0	71-80-90-100-112-132-160	36000	42000	64000	74000	24000	8800
	GTN05 L4	1991	0.75	5600	0.50	6.0	71-80-90-100-112-132-160	36000	42000	64000	74000	24000	8800
	GTN05 L4	2243	0.67	3800	0.30	6.0	71-80-90-100-112-132-160	36000	42000	64000	74000	24000	8800
	GTN05 L4	2799	0.54	3800	0.24	6.0	71-80-90-100-112-132-160	36000	42000	64000	74000	24000	8800
1000	GTN05 L1	3.60	278	2680	60	15.6	132-160-180-200	5730	6620	11600	13900	3680	8800
	GTN05 L1	4.25	235	2770	60	15.6	132-160-180-200	6060	7000	12200	14600	3890	8800
	GTN05 L1	5.33	188	2890	58	15.6	132-160-180-200	6540	7550	13000	15700	4190	8800
	GTN05 L1	6.20	161	3000	52	15.6	132-160-180-200	6870	7930	13600	16400	4410	8800
	GTN05 L1	7.50	133	2560	37	15.6	132-160-180-200	7320	8450	14400	17400	4700	8800
	GTN05 L2	12.5	80	3300	29	10.8	71-80-90-100-112-132-160	8690	10000	16800	20300	5570	8800
	GTN05 L2	15.3	65	3460	25	10.8	71-80-90-100-112-132-160	9300	10700	17900	21500	5960	8800
	GTN05 L2	18.1	55	4090	25	10.8	71-80-90-100-112-132-160	9830	11300	18800	22600	6300	8800
	GTN05 L2	20.8	48	3650	19.5	10.8	71-80-90-100-112-132-160	10300	11900	19600	23600	6600	8800

B

GTN05 L — 5800 Nm

n_1 min^{-1}		i	n_2 min^{-1}	M_{n2} Nm	P_{n1} kW	Pt kW	P (IEC)	Rn_2 [N] LK	LS	HK/MK	HS/MS	LSH	$M_{2\,max}$ Nm
1000	GTN05 L2	22.7	44	4290	21	10.8	71-80-90-100-112-132-160	10600	12200	20100	24200	6800	8800
	GTN05 L2	24.5	41	4200	19.1	10.8	71-80-90-100-112-132-160	10900	12500	20600	24800	6970	8800
	GTN05 L2	26.4	38	3560	15.0	10.8	71-80-90-100-112-132-160	11100	12900	21100	25300	7150	8800
	GTN05 L2	30.8	33	4310	15.6	10.8	71-80-90-100-112-132-160	11700	13500	22000	26500	7520	8800
	GTN05 L2	35.8	28.0	3570	11.1	10.8	71-80-90-100-112-132-160	12300	14200	23100	27700	7910	8800
	GTN05 L2	38.4	26.0	4330	12.5	10.8	71-80-90-100-112-132-160	12600	14600	23600	28300	8100	8800
	GTN05 L2	44.6	22.4	3570	8.9	10.8	71-80-90-100-112-132-160	13300	15300	24600	29600	8510	8800
	GTN05 L2	55.8	17.9	3560	7.1	10.8	71-80-90-100-112-132-160	14300	16500	26300	31700	9170	8800
	GTN05 L3	53.4	18.7	4190	9.0	9.0	71-80-90-100-112-132-160	14100	16300	26000	31300	9040	8800
	GTN05 L3	63.1	15.9	4980	9.1	9.0	71-80-90-100-112-132-160	14900	17200	27300	32900	9550	8800
	GTN05 L3	72.3	13.8	4340	6.9	9.0	71-80-90-100-112-132-160	15600	18000	28500	34300	10000	8800
	GTN05 L3	77.2	12.9	5110	7.6	9.0	71-80-90-100-112-132-160	15900	18400	29000	34900	10200	8800
	GTN05 L3	90.2	11.1	4440	5.7	9.0	71-80-90-100-112-132-160	16800	19400	30400	36600	10800	8800
	GTN05 L3	105	9.6	5310	5.8	9.0	71-80-90-100-112-132-160	17600	20300	31800	38300	11300	8800
	GTN05 L3	113	8.9	3600	3.7	9.0	71-80-90-100-112-132-160	18100	20900	32500	39100	11600	8800
	GTN05 L3	124	8.0	3600	3.3	9.0	71-80-90-100-112-132-160	18700	21600	33500	40300	12000	8800
	GTN05 L3	141	7.1	5260	4.3	9.0	71-80-90-100-112-132-160	19500	22500	34800	41900	12500	8800
	GTN05 L3	152	6.6	3600	2.7	9.0	71-80-90-100-112-132-160	20000	23100	35600	42900	12800	8800
	GTN05 L3	164	6.1	4450	3.1	9.0	71-80-90-100-112-132-160	20500	23600	36400	43800	13100	8800
	GTN05 L3	178	5.6	4460	2.9	9.0	71-80-90-100-112-132-160	21000	24300	37300	44900	13500	8800
	GTN05 L3	190	5.3	3600	2.2	9.0	71-80-90-100-112-132-160	21500	24800	38100	45800	13800	8800
	GTN05 L3	220	4.5	4750	2.5	9.0	71-80-90-100-112-132-160	22600	26100	39800	47900	14500	8800
	GTN05 L3	258	3.9	3740	1.7	9.0	71-80-90-100-112-132-160	23800	27500	41700	50200	15300	8800
	GTN05 L3	276	3.6	4670	1.9	9.0	71-80-90-100-112-132-160	24400	28100	42600	51200	15600	8800
	GTN05 L3	321	3.1	3870	1.4	9.0	71-80-90-100-112-132-160	25600	29600	44600	53600	16400	8800
	GTN05 L3	389	2.6	3290	0.97	9.0	71-80-90-100-112-132-160	27300	31500	47200	56800	17500	8800
	GTN05 L3	402	2.5	4000	1.1	9.0	71-80-90-100-112-132-160	27600	31900	47600	57300	17700	8800
	GTN05 L4	413	2.4	5060	1.4	7.2	71-80-90-100-112-132-160	27900	32200	48000	57800	17900	8800
	GTN05 L4	446	2.2	5530	1.5	7.2	71-80-90-100-112-132-160	28600	33000	49100	59100	18300	8800
	GTN05 L4	492	2.0	5390	1.3	7.2	71-80-90-100-112-132-160	29500	34100	50600	60900	19000	8800
	GTN05 L4	556	1.8	5610	1.2	7.2	71-80-90-100-112-132-160	30800	35500	52500	63200	19700	8800
	GTN05 L4	649	1.5	4600	0.84	7.2	71-80-90-100-112-132-160	32400	37400	55000	66200	20800	8800
	GTN05 L4	718	1.4	4430	0.73	7.2	71-80-90-100-112-132-160	33500	38700	56700	68200	21500	8800
	GTN05 L4	816	1.2	5490	0.80	7.2	71-80-90-100-112-132-160	35000	40400	58900	70900	22400	8800
	GTN05 L4	896	1.1	4600	0.61	7.2	71-80-90-100-112-132-160	36000	41600	60600	72900	23100	8800
	GTN05 L4	1018	0.98	5530	0.64	7.2	71-80-90-100-112-132-160	36000	42000	63000	74000	24000	8800
	GTN05 L4	1098	0.91	4690	0.51	7.2	71-80-90-100-112-132-160	36000	42000	64000	74000	24000	8800
	GTN05 L4	1278	0.78	5600	0.52	7.2	71-80-90-100-112-132-160	36000	42000	64000	74000	24000	8800
	GTN05 L4	1370	0.73	4690	0.40	7.2	71-80-90-100-112-132-160	36000	42000	64000	74000	24000	8800
	GTN05 L4	1586	0.63	4750	0.35	7.2	71-80-90-100-112-132-160	36000	42000	64000	74000	24000	8800
	GTN05 L4	1854	0.54	4690	0.30	7.2	71-80-90-100-112-132-160	36000	42000	64000	74000	24000	8800
	GTN05 L4	1991	0.50	5600	0.33	7.2	71-80-90-100-112-132-160	36000	42000	64000	74000	24000	8800
	GTN05 L4	2243	0.45	3800	0.20	7.2	71-80-90-100-112-132-160	36000	42000	64000	74000	24000	8800
	GTN05 L4	2799	0.36	3800	0.16	7.2	71-80-90-100-112-132-160	36000	42000	64000	74000	24000	8800
500	GTN05 L1	3.60	139	3300	49	26	132-160-180-200	7220	8340	14300	17200	4630	8800
	GTN05 L1	4.25	118	3410	43	26	132-160-180-200	7630	8810	15000	18000	4900	8800
	GTN05 L1	5.33	94	3560	36	26	132-160-180-200	8240	9510	16000	19300	5280	8800
	GTN05 L1	6.20	81	3490	30	26	132-160-180-200	8660	10000	16800	20200	5560	8800
	GTN05 L1	7.50	67	2910	21	26	132-160-180-200	9230	10700	17800	21400	5920	8800
	GTN05 L2	12.5	40	3890	17.3	18.0	71-80-90-100-112-132-160	10900	12600	20700	24900	7020	8800
	GTN05 L2	15.3	33	3930	14.3	18.0	71-80-90-100-112-132-160	11700	13500	22000	26500	7510	8800
	GTN05 L2	18.1	27.6	4580	14.1	18.0	71-80-90-100-112-132-160	12400	14300	23100	27800	7940	8800
	GTN05 L2	20.8	24.1	3970	10.6	18.0	71-80-90-100-112-132-160	13000	15000	24100	29000	8310	8800
	GTN05 L2	22.7	22.0	4340	10.6	18.0	71-80-90-100-112-132-160	13400	15400	24800	29800	8570	8800
	GTN05 L2	24.5	20.4	4680	10.6	18.0	71-80-90-100-112-132-160	13700	15800	25300	30500	8780	8800
	GTN05 L2	26.4	18.9	3580	7.5	18.0	71-80-90-100-112-132-160	14000	16200	25900	31200	9010	8800
	GTN05 L2	30.8	16.3	4360	7.9	18.0	71-80-90-100-112-132-160	14800	17100	27100	32600	9480	8800
	GTN05 L2	35.8	14.0	3590	5.6	18.0	71-80-90-100-112-132-160	15500	17900	28400	34200	9960	8800
	GTN05 L2	38.4	13.0	4380	6.3	18.0	71-80-90-100-112-132-160	15900	18400	29000	34900	10200	8800
	GTN05 L2	44.6	11.2	3600	4.5	18.0	71-80-90-100-112-132-160	16700	19300	30300	36500	10700	8800
	GTN05 L2	55.8	9.0	3600	3.6	18.0	71-80-90-100-112-132-160	18000	20800	32400	39000	11600	8800
	GTN05 L3	53.4	9.4	4490	4.8	15.0	71-80-90-100-112-132-160	17800	20500	32000	38500	11400	8800

B

GTN05 L — 5800 Nm

n_1 min^{-1}		i	n_2 min^{-1}	M_{n2} Nm	P_{n1} kW	Pt kW	P (IEC)	Rn_2 [N] LK	LS	HK/MK	HS/MS	LSH	$M_{2\,max}$ Nm
500	GTN05 L3	63.1	7.9	5360	4.9	15.0	71-80-90-100-112-132-160	18800	21700	33600	40500	12000	8800
	GTN05 L3	72.3	6.9	4490	3.6	15.0	71-80-90-100-112-132-160	19600	22700	35100	42200	12600	8800
	GTN05 L3	77.2	6.5	5410	4.0	15.0	71-80-90-100-112-132-160	20100	23200	35800	43000	12900	8800
	GTN05 L3	90.2	5.5	4490	2.9	15.0	71-80-90-100-112-132-160	21100	24400	37500	45100	13600	8800
	GTN05 L3	105	4.8	5480	3.0	15.0	71-80-90-100-112-132-160	22200	25600	39200	47100	14200	8800
	GTN05 L3	113	4.4	3670	1.9	15.0	71-80-90-100-112-132-160	22800	26300	40100	48200	14600	8800
	GTN05 L3	124	4.0	3720	1.7	15.0	71-80-90-100-112-132-160	23500	27200	41300	49600	15100	8800
	GTN05 L3	141	3.5	5320	2.2	15.0	71-80-90-100-112-132-160	24600	28400	42900	51600	15800	8800
	GTN05 L3	152	3.3	3840	1.4	15.0	71-80-90-100-112-132-160	25200	29100	43900	52800	16200	8800
	GTN05 L3	164	3.1	4870	1.7	15.0	71-80-90-100-112-132-160	25800	29800	44800	53900	16500	8800
	GTN05 L3	178	2.8	4940	1.6	15.0	71-80-90-100-112-132-160	26500	30600	45900	55200	17000	8800
	GTN05 L3	190	2.6	3970	1.2	15.0	71-80-90-100-112-132-160	27100	31300	46900	56400	17400	8800
	GTN05 L3	220	2.3	4750	1.2	15.0	71-80-90-100-112-132-160	28500	32900	49000	58900	18300	8800
	GTN05 L3	258	1.9	4180	0.93	15.0	71-80-90-100-112-132-160	30000	34600	51300	61700	19200	8800
	GTN05 L3	276	1.8	5140	1.1	15.0	71-80-90-100-112-132-160	30700	35400	52400	63100	19700	8800
	GTN05 L3	321	1.6	4340	0.78	15.0	71-80-90-100-112-132-160	32300	37300	54900	66000	20700	8800
	GTN05 L3	389	1.3	3660	0.54	15.0	71-80-90-100-112-132-160	34400	39700	58100	69900	22100	8800
	GTN05 L3	402	1.2	4520	0.64	15.0	71-80-90-100-112-132-160	34800	40200	58600	70600	22300	8800
	GTN05 L4	413	1.2	5480	0.78	12.0	71-80-90-100-112-132-160	35100	40500	59100	71200	22500	8800
	GTN05 L4	446	1.1	5760	0.76	12.0	71-80-90-100-112-132-160	36000	41600	60500	72800	23100	8800
	GTN05 L4	492	1.0	5530	0.66	12.0	71-80-90-100-112-132-160	36000	42000	62300	74000	23900	8800
	GTN05 L4	556	0.90	5800	0.62	12.0	71-80-90-100-112-132-160	36000	42000	64000	74000	24000	8800
	GTN05 L4	649	0.77	4700	0.43	12.0	71-80-90-100-112-132-160	36000	42000	64000	74000	24000	8800
	GTN05 L4	718	0.70	4690	0.39	12.0	71-80-90-100-112-132-160	36000	42000	64000	74000	24000	8800
	GTN05 L4	816	0.61	5530	0.40	12.0	71-80-90-100-112-132-160	36000	42000	64000	74000	24000	8800
	GTN05 L4	896	0.56	4690	0.31	12.0	71-80-90-100-112-132-160	36000	42000	64000	74000	24000	8800
	GTN05 L4	1018	0.49	5530	0.32	12.0	71-80-90-100-112-132-160	36000	42000	64000	74000	24000	8800
	GTN05 L4	1098	0.46	4690	0.25	12.0	71-80-90-100-112-132-160	36000	42000	64000	74000	24000	8800
	GTN05 L4	1278	0.39	5600	0.26	12.0	71-80-90-100-112-132-160	36000	42000	64000	74000	24000	8800
	GTN05 L4	1370	0.36	4690	0.20	12.0	71-80-90-100-112-132-160	36000	42000	64000	74000	24000	8800
	GTN05 L4	1586	0.32	4750	0.18	12.0	71-80-90-100-112-132-160	36000	42000	64000	74000	24000	8800
	GTN05 L4	1854	0.27	4690	0.15	12.0	71-80-90-100-112-132-160	36000	42000	64000	74000	24000	8800
	GTN05 L4	1991	0.25	5600	0.17	12.0	71-80-90-100-112-132-160	36000	42000	64000	74000	24000	8800
	GTN05 L4	2243	0.22	3800	0.10	12.0	71-80-90-100-112-132-160	36000	42000	64000	74000	24000	8800
	GTN05 L4	2799	0.18	3800	0.08	12.0	71-80-90-100-112-132-160	36000	42000	64000	74000	24000	8800

GTN06 L — 10840 Nm

n_1 min^{-1}		i	n_2 min^{-1}	M_{n2} Nm	P_{n1} kW	Pt kW	P (IEC)	Rn_2 [N] LK	LS	HK/MK	HS/MS	LSH	$M_{2\,max}$ Nm
1500	GTN06 L1	3.60	417	3760	75	18.0	160-180-200-225-250	6240	7070	16800	19500	4690	14900
	GTN06 L1	4.25	353	3890	75	18.0	160-180-200-225-250	6590	7470	17600	20500	4950	14900
	GTN06 L1	5.33	281	4060	75	18.0	160-180-200-225-250	7110	8060	18900	22000	5340	14900
	GTN06 L1	6.20	242	4200	75	18.0	160-180-200-225-250	7480	8470	19700	23000	5620	14900
	GTN06 L1	7.50	200	4090	75	18.0	160-180-200-225-250	7970	9030	20900	24300	5980	14900
	GTN06 L2	13.0	116	4820	40	13.0	132-160-180-200	9560	10800	24600	28700	7180	14900
	GTN06 L2	15.3	98	4990	40	13.0	132-160-180-200	10100	11400	25900	30100	7590	14900
	GTN06 L2	18.1	83	5890	40	13.0	132-160-180-200	10700	12100	27200	31700	8020	14900
	GTN06 L2	22.7	66	6140	40	13.0	132-160-180-200	11500	13000	29100	33900	8650	14900
	GTN06 L2	26.4	57	6370	40	13.0	132-160-180-200	12100	13700	30500	35500	9100	14900
	GTN06 L2	28.4	53	6700	39	13.0	132-160-180-200	12400	14100	31200	36300	9330	14900
	GTN06 L2	33.1	45	6870	35	13.0	132-160-180-200	13100	14800	32600	38000	9810	14900
	GTN06 L2	38.4	39	6470	28	13.0	132-160-180-200	13700	15600	34100	39700	10300	14900
	GTN06 L2	46.5	32	6470	23	13.0	132-160-180-200	14600	16600	36100	42100	11000	14900
	GTN06 L2	56.3	26.7	5210	15.5	13.0	132-160-180-200	15600	17700	38300	44500	11700	14900
	GTN06 L2	72.5	20.7	5290	12.2	13.0	132-160-180-200	17000	19200	41300	48100	12700	14900
	GTN06 L3	53.2	28.2	7100	20.0	7.5	71-80-90-100-112-132-160	15300	17300	37600	43800	11500	14900
	GTN06 L3	65.2	23.0	7480	19.7	7.5	71-80-90-100-112-132-160	16400	18600	40000	46600	12300	14900
	GTN06 L3	77.0	19.5	8350	18.7	7.5	71-80-90-100-112-132-160	17300	19600	42000	48900	13000	14900
	GTN06 L3	81.9	18.3	6890	14.5	7.5	71-80-90-100-112-132-160	17700	20000	42800	49900	13300	14900

GTN06 L

10840 Nm

n_1 min^{-1}		i	n_2 min^{-1}	M_{n2} Nm	P_{n1} kW	Pt kW	P (IEC)	Rn_2 [N] LK	LS	HK/MK	HS/MS	LSH	$M_{2\,max}$ Nm
1500	GTN06 L3	88.3	17.0	8550	16.7	7.5	71-80-90-100-112-132-160	18100	20500	43800	51000	13600	14900
	GTN06 L3	104	14.4	8900	14.7	7.5	71-80-90-100-112-132-160	19200	21700	46000	53600	14400	14900
	GTN06 L3	112	13.4	7410	11.3	7.5	71-80-90-100-112-132-160	19600	22200	47100	54800	14800	14900
	GTN06 L3	121	12.4	7790	11.1	7.5	71-80-90-100-112-132-160	20100	22800	48200	56100	15100	14900
	GTN06 L3	141	10.6	7900	9.6	7.5	71-80-90-100-112-132-160	21200	24000	50400	58700	15900	14900
	GTN06 L3	152	9.9	7590	8.6	7.5	71-80-90-100-112-132-160	21700	24600	51600	60000	16300	14900
	GTN06 L3	190	7.9	6510	5.9	7.5	71-80-90-100-112-132-160	23400	26500	55100	64200	17600	14900
	GTN06 L3	205	7.3	8110	6.8	7.5	71-80-90-100-112-132-160	24000	27200	56400	65600	18000	14900
	GTN06 L3	222	6.8	6520	5.1	7.5	71-80-90-100-112-132-160	24600	27900	57700	67200	18500	14900
	GTN06 L3	238	6.3	8180	5.9	7.5	71-80-90-100-112-132-160	25200	28600	59000	68700	19000	14900
	GTN06 L3	268	5.6	5500	3.5	7.5	71-80-90-100-112-132-160	26200	29700	61100	71200	19700	14900
	GTN06 L3	288	5.2	5500	3.3	7.5	71-80-90-100-112-132-160	26900	30500	62400	72700	20200	14900
	GTN06 L3	325	4.6	5540	2.9	7.5	71-80-90-100-112-132-160	28000	31700	64700	75400	21000	14900
	GTN06 L3	405	3.7	5670	2.4	7.5	71-80-90-100-112-132-160	30100	34100	69200	80500	22600	14900
	GTN06 L4	391	3.8	6840	3.1	6.0	71-80-90-100-112-132-160	29800	33700	68400	79700	22400	14900
	GTN06 L4	444	3.4	9850	3.9	6.0	71-80-90-100-112-132-160	31100	35200	71100	82800	23300	14900
	GTN06 L4	509	2.9	9450	3.3	6.0	71-80-90-100-112-132-160	32500	36800	74100	86300	24400	14900
	GTN06 L4	589	2.5	9320	2.8	6.0	71-80-90-100-112-132-160	34100	38700	77400	90100	25600	14900
	GTN06 L4	636	2.4	9450	2.6	6.0	71-80-90-100-112-132-160	35000	39600	79200	92200	26300	14900
	GTN06 L4	700	2.1	9470	2.4	6.0	71-80-90-100-112-132-160	36100	40900	81500	94900	27100	14900
	GTN06 L4	809	1.9	7690	1.7	6.0	71-80-90-100-112-132-160	37900	43000	85100	99100	28500	14900
	GTN06 L4	877	1.7	7710	1.6	6.0	71-80-90-100-112-132-160	39000	44100	87200	101600	29300	14900
	GTN06 L4	1015	1.5	9460	1.7	6.0	71-80-90-100-112-132-160	40900	46300	91100	106100	30700	14900
	GTN06 L4	1095	1.4	7790	1.3	6.0	71-80-90-100-112-132-160	41900	47500	93200	108500	31500	14900
	GTN06 L4	1279	1.2	8400	1.2	6.0	71-80-90-100-112-132-160	44200	50100	97700	113700	33200	14900
	GTN06 L4	1475	1.0	10100	1.2	6.0	71-80-90-100-112-132-160	45000	51000	101000	118700	34800	14900
	GTN06 L4	1597	0.94	8630	0.96	6.0	71-80-90-100-112-132-160	45000	51000	101000	119000	35000	14900
	GTN06 L4	1843	0.81	10100	0.97	6.0	71-80-90-100-112-132-160	45000	51000	101000	119000	35000	14900
	GTN06 L4	2074	0.72	7000	0.60	6.0	71-80-90-100-112-132-160	45000	51000	101000	119000	35000	14900
	GTN06 L4	2337	0.64	7000	0.53	6.0	71-80-90-100-112-132-160	45000	51000	101000	119000	35000	14900
	GTN06 L4	2916	0.51	7000	0.43	6.0	71-80-90-100-112-132-160	45000	51000	101000	119000	35000	14900
1000	GTN06 L1	3.60	278	4250	75	22	160-180-200-225-250	7140	8090	18900	22100	5360	14900
	GTN06 L1	4.25	235	4390	75	22	160-180-200-225-250	7550	8550	19900	23200	5670	14900
	GTN06 L1	5.33	188	4580	75	22	160-180-200-225-250	8140	9220	21300	24800	6120	14900
	GTN06 L1	6.20	161	4750	75	22	160-180-200-225-250	8560	9700	22300	26000	6430	14900
	GTN06 L1	7.50	133	4620	67	22	160-180-200-225-250	9120	10300	23600	27500	6850	14900
	GTN06 L2	13.0	77	5450	40	15.6	132-160-180-200	10900	12400	27800	32400	8220	14900
	GTN06 L2	15.3	65	5640	40	15.6	132-160-180-200	11600	13100	29200	34000	8690	14900
	GTN06 L2	18.1	55	6650	40	15.6	132-160-180-200	12200	13800	30700	35800	9180	14900
	GTN06 L2	22.7	44	6840	34	15.6	132-160-180-200	13200	14900	32900	38300	9910	14900
	GTN06 L2	26.4	38	6780	29	15.6	132-160-180-200	13900	15700	34400	40100	10400	14900
	GTN06 L2	28.4	35	7040	28	15.6	132-160-180-200	14200	16100	35200	41000	10700	14900
	GTN06 L2	33.1	30	7150	24	15.6	132-160-180-200	15000	16900	36800	42900	11200	14900
	GTN06 L2	38.4	26	6480	18.7	15.6	132-160-180-200	15700	17800	38500	44900	11800	14900
	GTN06 L2	46.5	21.5	6480	15.5	15.6	132-160-180-200	16800	19000	40800	47500	12600	14900
	GTN06 L2	56.3	17.8	5330	10.5	15.6	132-160-180-200	17800	20200	43200	50300	13400	14900
	GTN06 L2	72.5	13.8	5400	8.3	15.6	132-160-180-200	19400	22000	46600	54300	14600	14900
	GTN06 L3	53.2	18.8	7890	17.0	9.0	71-80-90-100-112-132-160	17500	19900	42500	49500	13200	14900
	GTN06 L3	65.2	15.3	8320	14.6	9.0	71-80-90-100-112-132-160	18800	21200	45200	52600	14100	14900
	GTN06 L3	77.0	13.0	9090	13.5	9.0	71-80-90-100-112-132-160	19800	22500	47500	55300	14900	14900
	GTN06 L3	81.9	12.2	7310	10.2	9.0	71-80-90-100-112-132-160	20200	22900	48400	56300	15200	14900
	GTN06 L3	88.3	11.3	9230	12.0	9.0	71-80-90-100-112-132-160	20700	23500	49500	57600	15600	14900
	GTN06 L3	104	9.6	9610	10.6	9.0	71-80-90-100-112-132-160	21900	24800	52000	60500	16500	14900
	GTN06 L3	112	8.9	7590	7.8	9.0	71-80-90-100-112-132-160	22500	25500	53200	61900	16900	14900
	GTN06 L3	121	8.2	8050	7.6	9.0	71-80-90-100-112-132-160	23100	26100	54400	63300	17300	14900
	GTN06 L3	141	7.1	8120	6.6	9.0	71-80-90-100-112-132-160	24200	27500	56900	66300	18200	14900
	GTN06 L3	152	6.6	7590	5.7	9.0	71-80-90-100-112-132-160	24900	28200	58200	67800	18700	14900
	GTN06 L3	190	5.3	6530	3.9	9.0	71-80-90-100-112-132-160	26800	30300	62200	72500	20100	14900
	GTN06 L3	205	4.9	8330	4.7	9.0	71-80-90-100-112-132-160	27500	31100	63700	74100	20600	14900
	GTN06 L3	222	4.5	6650	3.4	9.0	71-80-90-100-112-132-160	28200	31900	65200	75900	21200	14900
	GTN06 L3	238	4.2	8550	4.1	9.0	71-80-90-100-112-132-160	28900	32700	66600	77600	21700	14900
	GTN06 L3	268	3.7	5670	2.4	9.0	71-80-90-100-112-132-160	30000	34000	69000	80400	22600	14900
	GTN06 L3	288	3.5	5710	2.3	9.0	71-80-90-100-112-132-160	30800	34900	70500	82100	23100	14900

B

GTN06 L

10840 Nm

n_1 min^{-1}		i	n_2 min^{-1}	M_{n2} Nm	P_{n1} kW	Pt kW	P (IEC) -	Rn_2 [N] LK	LS	HK/MK	HS/MS	LSH	$M_{2\,max}$ Nm
1000	GTN06 L3	325	3.1	5780	2.0	9.0	71-80-90-100-112-132-160	32000	36300	73100	85100	24100	14900
	GTN06 L3	405	2.5	5910	1.7	9.0	71-80-90-100-112-132-160	34500	39100	78100	91000	25900	14900
	GTN06 L4	391	2.6	7340	2.2	7.2	71-80-90-100-112-132-160	34100	38600	77300	90000	25600	14900
	GTN06 L4	444	2.3	9910	2.6	7.2	71-80-90-100-112-132-160	35500	40300	80300	93500	26700	14900
	GTN06 L4	509	2.0	9450	2.2	7.2	71-80-90-100-112-132-160	37200	42200	83700	97400	27900	14900
	GTN06 L4	589	1.7	9650	1.9	7.2	71-80-90-100-112-132-160	39100	44300	87400	101800	29300	14900
	GTN06 L4	636	1.6	9450	1.8	7.2	71-80-90-100-112-132-160	40100	45400	89400	104100	30100	14900
	GTN06 L4	700	1.4	9790	1.7	7.2	71-80-90-100-112-132-160	41400	46900	92000	107200	31100	14900
	GTN06 L4	809	1.2	7820	1.1	7.2	71-80-90-100-112-132-160	43400	49200	96100	111900	32600	14900
	GTN06 L4	877	1.1	7850	1.1	7.2	71-80-90-100-112-132-160	44600	50500	98500	114700	33500	14900
	GTN06 L4	1015	0.99	9540	1.1	7.2	71-80-90-100-112-132-160	45000	51000	101000	119000	35000	14900
	GTN06 L4	1095	0.91	7890	0.85	7.2	71-80-90-100-112-132-160	45000	51000	101000	119000	35000	14900
	GTN06 L4	1279	0.78	8630	0.80	7.2	71-80-90-100-112-132-160	45000	51000	101000	119000	35000	14900
	GTN06 L4	1475	0.68	10100	0.81	7.2	71-80-90-100-112-132-160	45000	51000	101000	119000	35000	14900
	GTN06 L4	1597	0.63	8630	0.64	7.2	71-80-90-100-112-132-160	45000	51000	101000	119000	35000	14900
	GTN06 L4	1843	0.54	10100	0.65	7.2	71-80-90-100-112-132-160	45000	51000	101000	119000	35000	14900
	GTN06 L4	2074	0.48	7000	0.40	7.2	71-80-90-100-112-132-160	45000	51000	101000	119000	35000	14900
	GTN06 L4	2337	0.43	7000	0.35	7.2	71-80-90-100-112-132-160	45000	51000	101000	119000	35000	14900
	GTN06 L4	2916	0.34	7000	0.28	7.2	71-80-90-100-112-132-160	45000	51000	101000	119000	35000	14900
500	GTN06 L1	3.60	139	5230	75	36	160-180-200-225-250	9000	10200	23300	27200	6760	14900
	GTN06 L1	4.25	118	5410	69	36	160-180-200-225-250	9510	10800	24500	28500	7140	14900
	GTN06 L1	5.33	94	5640	57	36	160-180-200-225-250	10300	11600	26200	30600	7700	14900
	GTN06 L1	6.20	81	5770	50	36	160-180-200-225-250	10800	12200	27400	32000	8100	14900
	GTN06 L1	7.50	67	5040	36	36	160-180-200-225-250	11500	13000	29100	33800	8630	14900
	GTN06 L2	13.0	39	6470	28	26	132-160-180-200	13800	15600	34200	39900	10400	14900
	GTN06 L2	15.3	33	6830	25	26	132-160-180-200	14600	16500	36000	41900	10900	14900
	GTN06 L2	18.1	27.7	7760	24	26	132-160-180-200	15400	17400	37800	44100	11600	14900
	GTN06 L2	22.7	22.1	7820	19.2	26	132-160-180-200	16600	18800	40500	47200	12500	14900
	GTN06 L2	26.4	19.0	7190	15.2	26	132-160-180-200	17500	19800	42400	49300	13100	14900
	GTN06 L2	28.4	17.6	7530	14.7	26	132-160-180-200	17900	20300	43400	50500	13500	14900
	GTN06 L2	33.1	15.1	7640	12.9	26	132-160-180-200	18800	21300	45400	52800	14200	14900
	GTN06 L2	38.4	13.0	6490	9.4	26	132-160-180-200	19800	22400	47500	55300	14900	14900
	GTN06 L2	46.5	10.8	6500	7.8	26	132-160-180-200	21100	23900	50200	58500	15900	14900
	GTN06 L2	56.3	8.9	5500	5.4	26	132-160-180-200	22500	25500	53200	61900	16900	14900
	GTN06 L2	72.5	6.9	5500	4.2	26	132-160-180-200	24500	27700	57400	66800	18400	14900
	GTN06 L3	53.2	9.4	9300	10.0	15.0	71-80-90-100-112-132-160	22100	25000	52300	60900	16600	14900
	GTN06 L3	65.2	7.7	9320	8.2	15.0	71-80-90-100-112-132-160	23600	26800	55600	64800	17800	14900
	GTN06 L3	77.0	6.5	9750	7.3	15.0	71-80-90-100-112-132-160	25000	28300	58400	68100	18800	14900
	GTN06 L3	81.9	6.1	7650	5.4	15.0	71-80-90-100-112-132-160	25500	28900	59500	69300	19100	14900
	GTN06 L3	88.3	5.7	9450	6.1	15.0	71-80-90-100-112-132-160	26100	29600	60900	70900	19600	14900
	GTN06 L3	104	4.8	9850	5.4	15.0	71-80-90-100-112-132-160	27600	31300	64000	74500	20800	14900
	GTN06 L3	112	4.5	7590	3.9	15.0	71-80-90-100-112-132-160	28300	32100	65500	76200	21300	14900
	GTN06 L3	121	4.1	8580	4.1	15.0	71-80-90-100-112-132-160	29100	32900	67000	78000	21800	14900
	GTN06 L3	141	3.5	8800	3.6	15.0	71-80-90-100-112-132-160	30500	34600	70100	81600	23000	14900
	GTN06 L3	152	3.3	7590	2.9	15.0	71-80-90-100-112-132-160	31300	35500	71700	83500	23500	14900
	GTN06 L3	190	2.6	7300	2.2	15.0	71-80-90-100-112-132-160	33700	38200	76600	89200	25300	14900
	GTN06 L3	205	2.4	9370	2.6	15.0	71-80-90-100-112-132-160	34600	39200	78400	91300	26000	14900
	GTN06 L3	222	2.3	7500	1.9	15.0	71-80-90-100-112-132-160	35500	40300	80300	93500	26700	14900
	GTN06 L3	238	2.1	9390	2.3	15.0	71-80-90-100-112-132-160	36400	41200	82000	95500	27300	14900
	GTN06 L3	268	1.9	6230	1.3	15.0	71-80-90-100-112-132-160	37900	42900	85000	99000	28400	14900
	GTN06 L3	288	1.7	6320	1.3	15.0	71-80-90-100-112-132-160	38800	43900	86800	101100	29100	14900
	GTN06 L3	325	1.5	6460	1.1	15.0	71-80-90-100-112-132-160	40300	45700	90000	104800	30300	14900
	GTN06 L3	405	1.2	6730	0.95	15.0	71-80-90-100-112-132-160	43400	49200	96200	112000	32600	14900
	GTN06 L4	391	1.3	8270	1.3	12.0	71-80-90-100-112-132-160	42900	48600	95200	110800	32200	14900
	GTN06 L4	444	1.1	10300	1.4	12.0	71-80-90-100-112-132-160	44800	50700	98900	115100	33600	14900
	GTN06 L4	509	0.98	9450	1.1	12.0	71-80-90-100-112-132-160	45000	51000	101000	119000	35000	14900
	GTN06 L4	589	0.85	10100	1.0	12.0	71-80-90-100-112-132-160	45000	51000	101000	119000	35000	14900
	GTN06 L4	636	0.79	9450	0.88	12.0	71-80-90-100-112-132-160	45000	51000	101000	119000	35000	14900
	GTN06 L4	700	0.71	10100	0.85	12.0	71-80-90-100-112-132-160	45000	51000	101000	119000	35000	14900
	GTN06 L4	809	0.62	7890	0.58	12.0	71-80-90-100-112-132-160	45000	51000	101000	119000	35000	14900
	GTN06 L4	877	0.57	7890	0.53	12.0	71-80-90-100-112-132-160	45000	51000	101000	119000	35000	14900
	GTN06 L4	1015	0.49	9540	0.56	12.0	71-80-90-100-112-132-160	45000	51000	101000	119000	35000	14900

B

GTN06 L — 10840 Nm

n_1 min^{-1}		i	n_2 min^{-1}	M_{n2} Nm	P_{n1} kW	Pt kW	P (IEC)	Rn_2 [N] LK	LS	HK/MK	HS/MS	LSH	$M_{2\,max}$ Nm
500	GTN06 L4	1095	0.46	7890	0.43	12.0	71-80-90-100-112-132-160	45000	51000	101000	119000	35000	14900
	GTN06 L4	1279	0.39	8630	0.40	12.0	71-80-90-100-112-132-160	45000	51000	101000	119000	35000	14900
	GTN06 L4	1475	0.34	10100	0.40	12.0	71-80-90-100-112-132-160	45000	51000	101000	119000	35000	14900
	GTN06 L4	1597	0.31	8630	0.32	12.0	71-80-90-100-112-132-160	45000	51000	101000	119000	35000	14900
	GTN06 L4	1843	0.27	10100	0.32	12.0	71-80-90-100-112-132-160	45000	51000	101000	119000	35000	14900
	GTN06 L4	2074	0.24	7000	0.20	12.0	71-80-90-100-112-132-160	45000	51000	101000	119000	35000	14900
	GTN06 L4	2337	0.21	7000	0.18	12.0	71-80-90-100-112-132-160	45000	51000	101000	119000	35000	14900
	GTN06 L4	2916	0.17	7000	0.14	12.0	71-80-90-100-112-132-160	45000	51000	101000	119000	35000	14900

GTN07 L — 15680 Nm

n_1 min^{-1}		i	n_2 min^{-1}	M_{n2} Nm	P_{n1} kW	Pt kW	P (IEC)	Rn_2 [N] LK	LS	HK/MK	HS/MS	LSH	$M_{2\,max}$ Nm
1500	GTN07 L1	3.43	438	5110	115	22	180-200-225-250	6820	8560	17800	23300	5930	18600
	GTN07 L1	4.09	367	5260	115	22	180-200-225-250	7230	9070	18700	24600	6290	21000
	GTN07 L1	5.25	286	5540	115	22	180-200-225-250	7860	9860	20200	26500	6830	21000
	GTN07 L1	6.23	241	5750	115	22	180-200-225-250	8320	10400	21300	27900	7230	21000
	GTN07 L2	12.3	122	7510	60	18.0	132-160-180-200	10500	13100	26100	34200	9080	18600
	GTN07 L2	14.7	102	7730	60	18.0	132-160-180-200	11100	13900	27500	36100	9640	21000
	GTN07 L2	17.4	86	8120	60	18.0	132-160-180-200	11700	14700	28900	37900	10200	21000
	GTN07 L2	21.8	69	8690	60	18.0	132-160-180-200	12600	15900	31000	40600	11000	21000
	GTN07 L2	25.4	59	9090	60	18.0	132-160-180-200	13300	16700	32400	42500	11600	21000
	GTN07 L2	28.0	54	9150	55	18.0	132-160-180-200	13700	17200	33400	43700	11900	21000
	GTN07 L2	30.7	49	9590	52	18.0	132-160-180-200	14200	17800	34300	45000	12300	21000
	GTN07 L2	32.6	46	9410	48	18.0	132-160-180-200	14400	18100	34900	45800	12600	21000
	GTN07 L2	38.6	39	8310	36	18.0	132-160-180-200	15300	19200	36800	48200	13300	21000
	GTN07 L2	46.7	32	8360	30	18.0	132-160-180-200	16300	20400	38900	51000	14200	21000
	GTN07 L3	51.3	29.3	10700	30	11.0	71-80-90-100-112-132-160	16800	21100	40000	52400	14600	21000
	GTN07 L3	60.5	24.8	11100	30	11.0	71-80-90-100-112-132-160	17800	22300	42100	55100	15400	21000
	GTN07 L3	74.1	20.2	11600	27	11.0	71-80-90-100-112-132-160	19000	23800	44700	58600	16500	21000
	GTN07 L3	80.6	18.6	10200	22	11.0	71-80-90-100-112-132-160	19500	24500	45800	60100	17000	21000
	GTN07 L3	93.0	16.1	12200	23	11.0	71-80-90-100-112-132-160	20500	25700	47900	62700	17800	21000
	GTN07 L3	100	15.0	12400	21	11.0	71-80-90-100-112-132-160	21000	26400	49000	64100	18300	21000
	GTN07 L3	113	13.2	10500	16.0	11.0	71-80-90-100-112-132-160	21900	27500	50800	66500	19000	21000
	GTN07 L3	126	11.9	13000	17.8	11.0	71-80-90-100-112-132-160	22700	28400	52400	68700	19700	21000
	GTN07 L3	139	10.8	10700	13.3	11.0	71-80-90-100-112-132-160	23400	29400	54000	70700	20400	21000
	GTN07 L3	146	10.3	13400	15.8	11.0	71-80-90-100-112-132-160	23800	29900	54800	71800	20700	21000
	GTN07 L3	162	9.3	10800	11.6	11.0	71-80-90-100-112-132-160	24600	30900	56500	74000	21400	21000
	GTN07 L3	177	8.5	12300	12.0	11.0	71-80-90-100-112-132-160	25400	31900	58000	76100	22100	21000
	GTN07 L3	202	7.4	11000	9.4	11.0	71-80-90-100-112-132-160	26500	33300	60400	79100	23100	21000
	GTN07 L3	221	6.8	12700	9.9	11.0	71-80-90-100-112-132-160	27300	34300	62000	81300	23800	21000
	GTN07 L3	239	6.3	8700	6.3	11.0	71-80-90-100-112-132-160	28100	35200	63500	83300	24400	21000
	GTN07 L3	284	5.3	11300	6.8	11.0	71-80-90-100-112-132-160	29700	37300	66900	87600	25800	21000
	GTN07 L3	336	4.5	8840	4.5	11.0	71-80-90-100-112-132-160	31500	39500	70400	92200	27300	21000
	GTN07 L4	349	4.3	14900	7.6	7.5	71-80-90-100-112-132-160	31800	40000	71200	93300	27700	21000
	GTN07 L4	406	3.7	11900	5.2	7.5	71-80-90-100-112-132-160	33500	42000	74400	97500	29100	21000
	GTN07 L4	465	3.2	12200	4.6	7.5	71-80-90-100-112-132-160	35000	44000	77500	101600	30500	21000
	GTN07 L4	509	2.9	14000	4.9	7.5	71-80-90-100-112-132-160	36100	45300	79700	104400	31400	21000
	GTN07 L4	579	2.6	14900	4.6	7.5	71-80-90-100-112-132-160	37700	47300	82800	108500	32800	21000
	GTN07 L4	654	2.3	12900	3.5	7.5	71-80-90-100-112-132-160	39200	49200	85900	112600	34100	21000
	GTN07 L4	722	2.1	15000	3.7	7.5	71-80-90-100-112-132-160	40600	50900	88500	116000	35300	21000
	GTN07 L4	801	1.9	13300	3.0	7.5	71-80-90-100-112-132-160	42000	52700	91300	119600	36500	21000
	GTN07 L4	906	1.7	15200	3.0	7.5	71-80-90-100-112-132-160	43800	54900	94700	124200	38000	21000
	GTN07 L4	999	1.5	13800	2.5	7.5	71-80-90-100-112-132-160	45200	56700	97600	127800	39300	21000
	GTN07 L4	1157	1.3	14200	2.2	7.5	71-80-90-100-112-132-160	47500	59600	101900	133600	41300	21000
	GTN07 L4	1274	1.2	12300	1.7	7.5	71-80-90-100-112-132-160	49000	61500	104900	137500	42600	21000
	GTN07 L4	1408	1.1	15600	2.0	7.5	71-80-90-100-112-132-160	50700	63600	108100	141700	44100	21000
	GTN07 L4	1591	0.94	15000	1.7	7.5	71-80-90-100-112-132-160	52000	65000	109000	145000	45000	21000
	GTN07 L4	1767	0.85	15700	1.6	7.5	71-80-90-100-112-132-160	52000	65000	109000	145000	45000	21000
	GTN07 L4	2041	0.73	14300	1.2	7.5	71-80-90-100-112-132-160	52000	65000	109000	145000	45000	21000

B

GTN07 L

15680 Nm

n_1 min^{-1}		i	n_2 min^{-1}	M_{n2} Nm	P_{n1} kW	Pt kW	P (IEC) -	Rn_2 [N] LK	LS	HK/MK	HS/MS	LSH	$M_{2\,max}$ Nm
1500	**GTN07 L4**	**2423**	0.62	11000	0.81	7.5	71-80-90-100-112-132-160	52000	65000	109000	145000	45000	21000
1000	**GTN07 L1**	**3.43**	292	5770	115	26	180-200-225-250	7810	9790	20100	26300	6790	18600
	GTN07 L1	**4.09**	244	5940	115	26	180-200-225-250	8280	10400	21200	27700	7200	21000
	GTN07 L1	**5.25**	190	6260	115	26	180-200-225-250	9000	11300	22800	29900	7820	21000
	GTN07 L1	**6.23**	160	6500	113	26	180-200-225-250	9530	12000	24000	31500	8280	21000
	GTN07 L2	**12.3**	81	8060	60	22	132-160-180-200	12000	15000	29500	38600	10400	18600
	GTN07 L2	**14.7**	68	8720	60	22	132-160-180-200	12700	15900	31100	40700	11000	21000
	GTN07 L2	**17.4**	58	9170	59	22	132-160-180-200	13400	16800	32700	42800	11700	21000
	GTN07 L2	**21.8**	46	9740	50	22	132-160-180-200	14500	18100	35000	45800	12600	21000
	GTN07 L2	**25.4**	39	10100	44	22	132-160-180-200	15200	19100	36600	48000	13200	21000
	GTN07 L2	**28.0**	36	9630	38	22	132-160-180-200	15700	19700	37700	49400	13700	21000
	GTN07 L2	**30.7**	33	10200	37	22	132-160-180-200	16200	20300	38800	50800	14100	21000
	GTN07 L2	**32.6**	31	9760	33	22	132-160-180-200	16500	20700	39400	51700	14400	21000
	GTN07 L2	**38.6**	25.9	8430	24	22	132-160-180-200	17500	22000	41500	54400	15200	21000
	GTN07 L2	**46.7**	21.4	8480	20	22	132-160-180-200	18600	23400	44000	57600	16200	21000
	GTN07 L3	**51.3**	19.5	11700	26	13.2	71-80-90-100-112-132-160	19200	24100	45200	59200	16700	21000
	GTN07 L3	**60.5**	16.5	12100	23	13.2	71-80-90-100-112-132-160	20300	25500	47500	62300	17700	21000
	GTN07 L3	**74.1**	13.5	12700	19.6	13.2	71-80-90-100-112-132-160	21700	27300	50500	66200	18900	21000
	GTN07 L3	**80.6**	12.4	10600	15.1	13.2	71-80-90-100-112-132-160	22400	28100	51800	67800	19400	21000
	GTN07 L3	**93.0**	10.8	13300	16.4	13.2	71-80-90-100-112-132-160	23500	29400	54000	70800	20400	21000
	GTN07 L3	**100**	10.0	13500	15.5	13.2	71-80-90-100-112-132-160	24100	30200	55300	72400	20900	21000
	GTN07 L3	**113**	8.8	10900	11.0	13.2	71-80-90-100-112-132-160	25000	31400	57300	75100	21800	21000
	GTN07 L3	**126**	7.9	14000	12.7	13.2	71-80-90-100-112-132-160	25900	32600	59200	77600	22600	21000
	GTN07 L3	**139**	7.2	11000	9.1	13.2	71-80-90-100-112-132-160	26800	33600	60900	79900	23300	21000
	GTN07 L3	**146**	6.8	13800	10.8	13.2	71-80-90-100-112-132-160	27300	34200	61900	81100	23700	21000
	GTN07 L3	**162**	6.2	11100	7.9	13.2	71-80-90-100-112-132-160	28200	35400	63800	83600	24500	21000
	GTN07 L3	**177**	5.6	12300	8.0	13.2	71-80-90-100-112-132-160	29100	36500	65600	85900	25300	21000
	GTN07 L3	**202**	5.0	11300	6.4	13.2	71-80-90-100-112-132-160	30400	38100	68200	89300	26400	21000
	GTN07 L3	**221**	4.5	13000	6.8	13.2	71-80-90-100-112-132-160	31300	39300	70100	91800	27200	21000
	GTN07 L3	**239**	4.2	8920	4.3	13.2	71-80-90-100-112-132-160	32100	40300	71800	94000	27900	21000
	GTN07 L3	**284**	3.5	12000	4.8	13.2	71-80-90-100-112-132-160	34000	42700	75500	98900	29600	21000
	GTN07 L3	**336**	3.0	9370	3.2	13.2	71-80-90-100-112-132-160	36000	45200	79500	104200	31300	21000
	GTN07 L4	**349**	2.9	14900	5.0	9.0	71-80-90-100-112-132-160	36500	45700	80400	105300	31700	21000
	GTN07 L4	**406**	2.5	12700	3.7	9.0	71-80-90-100-112-132-160	38300	48100	84100	110200	33300	21000
	GTN07 L4	**465**	2.2	13000	3.3	9.0	71-80-90-100-112-132-160	40100	50300	87600	114800	34900	21000
	GTN07 L4	**509**	2.0	14300	3.3	9.0	71-80-90-100-112-132-160	41300	51900	90000	117900	35900	21000
	GTN07 L4	**579**	1.7	15200	3.1	9.0	71-80-90-100-112-132-160	43100	54100	93500	122600	37500	21000
	GTN07 L4	**654**	1.5	13800	2.5	9.0	71-80-90-100-112-132-160	44900	56400	97000	127100	39100	21000
	GTN07 L4	**722**	1.4	15400	2.5	9.0	71-80-90-100-112-132-160	46400	58300	100000	131000	40400	21000
	GTN07 L4	**801**	1.2	14300	2.1	9.0	71-80-90-100-112-132-160	48100	60300	103100	135100	41800	21000
	GTN07 L4	**906**	1.1	15600	2.0	9.0	71-80-90-100-112-132-160	50100	62900	107000	140200	43500	21000
	GTN07 L4	**999**	1.0	14800	1.8	9.0	71-80-90-100-112-132-160	51800	64900	109000	144400	45000	21000
	GTN07 L4	**1157**	0.86	14800	1.5	9.0	71-80-90-100-112-132-160	52000	65000	109000	145000	45000	21000
	GTN07 L4	**1274**	0.78	12300	1.1	9.0	71-80-90-100-112-132-160	52000	65000	109000	145000	45000	21000
	GTN07 L4	**1408**	0.71	15700	1.3	9.0	71-80-90-100-112-132-160	52000	65000	109000	145000	45000	21000
	GTN07 L4	**1591**	0.63	15000	1.1	9.0	71-80-90-100-112-132-160	52000	65000	109000	145000	45000	21000
	GTN07 L4	**1767**	0.57	15700	1.0	9.0	71-80-90-100-112-132-160	52000	65000	109000	145000	45000	21000
	GTN07 L4	**2041**	0.49	14300	0.83	9.0	71-80-90-100-112-132-160	52000	65000	109000	145000	45000	21000
	GTN07 L4	**2423**	0.41	11000	0.54	9.0	71-80-90-100-112-132-160	52000	65000	109000	145000	45000	21000
500	**GTN07 L1**	**3.43**	146	7110	112	44	180-200-225-250	9840	12300	24700	32400	8550	18600
	GTN07 L1	**4.09**	122	7320	97	44	180-200-225-250	10400	13100	26100	34200	9070	21000
	GTN07 L1	**5.25**	95	7700	79	44	180-200-225-250	11300	14200	28100	36800	9850	21000
	GTN07 L1	**6.23**	80	7720	67	44	180-200-225-250	12000	15100	29600	38800	10400	21000
	GTN07 L2	**12.3**	41	8390	38	36	132-160-180-200	15100	18900	36300	47600	13100	18600
	GTN07 L2	**14.7**	34	10400	39	36	132-160-180-200	16000	20100	38300	50200	13900	21000
	GTN07 L2	**17.4**	28.8	10800	34	36	132-160-180-200	16900	21200	40200	52700	14700	21000
	GTN07 L2	**21.8**	22.9	11300	29	36	132-160-180-200	18200	22900	43100	56400	15800	21000
	GTN07 L2	**25.4**	19.7	11700	26	36	132-160-180-200	19200	24000	45100	59000	16700	21000
	GTN07 L2	**28.0**	17.9	10200	20	36	132-160-180-200	19800	24900	46400	60800	17200	21000
	GTN07 L2	**30.7**	16.3	11400	21	36	132-160-180-200	20400	25600	47700	62500	17700	21000
	GTN07 L2	**32.6**	15.4	10400	17.7	36	132-160-180-200	20800	26100	48600	63600	18100	21000

B

GTN07 L — 15680 Nm

n_1 min^{-1}		i	n_2 min^{-1}	M_{n2} Nm	P_{n1} kW	Pt kW	P (IEC)	Rn_2 [N] LK	LS	HK/MK	HS/MS	LSH	$M_{2\,max}$ Nm
500	GTN07 L2	38.6	12.9	8620	12.4	36	132-160-180-200	22000	27700	51100	67000	19200	21000
	GTN07 L2	46.7	10.7	8680	10.3	36	132-160-180-200	23500	29500	54100	70900	20400	21000
	GTN07 L3	51.3	9.8	13600	15.2	22	71-80-90-100-112-132-160	24200	30400	55600	72900	21100	21000
	GTN07 L3	60.5	8.3	13900	13.2	22	71-80-90-100-112-132-160	25600	32100	58500	76600	22300	21000
	GTN07 L3	74.1	6.7	14300	11.0	22	71-80-90-100-112-132-160	27400	34400	62200	81500	23800	21000
	GTN07 L3	80.6	6.2	11100	7.9	22	71-80-90-100-112-132-160	28200	35300	63700	83500	24500	21000
	GTN07 L3	93.0	5.4	14700	9.1	22	71-80-90-100-112-132-160	29600	37100	66500	87200	25700	21000
	GTN07 L3	100	5.0	14900	8.5	22	71-80-90-100-112-132-160	30300	38000	68100	89200	26300	21000
	GTN07 L3	113	4.4	11500	5.8	22	71-80-90-100-112-132-160	31600	39600	70600	92500	27400	21000
	GTN07 L3	126	4.0	14900	6.8	22	71-80-90-100-112-132-160	32700	41000	72900	95500	28400	21000
	GTN07 L3	139	3.6	11900	4.9	22	71-80-90-100-112-132-160	33800	42400	75000	98300	29400	21000
	GTN07 L3	146	3.4	14000	5.5	22	71-80-90-100-112-132-160	34400	43100	76200	99900	29900	21000
	GTN07 L3	162	3.1	12300	4.4	22	71-80-90-100-112-132-160	35500	44600	78500	102900	30900	21000
	GTN07 L3	177	2.8	12300	4.0	22	71-80-90-100-112-132-160	36600	45900	80700	105800	31800	21000
	GTN07 L3	202	2.5	12700	3.6	22	71-80-90-100-112-132-160	38200	48000	83900	110000	33200	21000
	GTN07 L3	221	2.3	13900	3.6	22	71-80-90-100-112-132-160	39400	49500	86300	113000	34300	21000
	GTN07 L3	239	2.1	9860	2.4	22	71-80-90-100-112-132-160	40500	50800	88300	115800	35200	21000
	GTN07 L3	284	1.8	13300	2.7	22	71-80-90-100-112-132-160	42800	53800	93000	121800	37200	21000
	GTN07 L3	336	1.5	10400	1.8	22	71-80-90-100-112-132-160	45400	56900	97900	128200	39400	21000
	GTN07 L4	349	1.4	15400	2.6	15.0	71-80-90-100-112-132-160	45900	57600	98900	129700	39900	21000
	GTN07 L4	406	1.2	14300	2.1	15.0	71-80-90-100-112-132-160	48300	60600	103500	135600	42000	21000
	GTN07 L4	465	1.1	14700	1.9	15.0	71-80-90-100-112-132-160	50500	63400	107800	141300	43900	21000
	GTN07 L4	509	0.98	15000	1.7	15.0	71-80-90-100-112-132-160	52000	65000	109000	145000	45000	21000
	GTN07 L4	579	0.86	15700	1.6	15.0	71-80-90-100-112-132-160	52000	65000	109000	145000	45000	21000
	GTN07 L4	654	0.77	14800	1.3	15.0	71-80-90-100-112-132-160	52000	65000	109000	145000	45000	21000
	GTN07 L4	722	0.69	15700	1.3	15.0	71-80-90-100-112-132-160	52000	65000	109000	145000	45000	21000
	GTN07 L4	801	0.62	14800	1.1	15.0	71-80-90-100-112-132-160	52000	65000	109000	145000	45000	21000
	GTN07 L4	906	0.55	15700	1.0	15.0	71-80-90-100-112-132-160	52000	65000	109000	145000	45000	21000
	GTN07 L4	999	0.50	14800	0.88	15.0	71-80-90-100-112-132-160	52000	65000	109000	145000	45000	21000
	GTN07 L4	1157	0.43	14800	0.76	15.0	71-80-90-100-112-132-160	52000	65000	109000	145000	45000	21000
	GTN07 L4	1274	0.39	12300	0.57	15.0	71-80-90-100-112-132-160	52000	65000	109000	145000	45000	21000
	GTN07 L4	1408	0.36	15700	0.66	15.0	71-80-90-100-112-132-160	52000	65000	109000	145000	45000	21000
	GTN07 L4	1591	0.31	15000	0.56	15.0	71-80-90-100-112-132-160	52000	65000	109000	145000	45000	21000
	GTN07 L4	1767	0.28	15700	0.52	15.0	71-80-90-100-112-132-160	52000	65000	109000	145000	45000	21000
	GTN07 L4	2041	0.24	14300	0.42	15.0	71-80-90-100-112-132-160	52000	65000	109000	145000	45000	21000
	GTN07 L4	2423	0.21	11000	0.27	15.0	71-80-90-100-112-132-160	52000	65000	109000	145000	45000	21000

GTN09 L — 23240 Nm

n_1 min^{-1}		i	n_2 min^{-1}	M_{n2} Nm	P_{n1} kW	Pt kW	P (IEC)	Rn_2 [N] LK	LS	HK/MK	HS/MS	LSH	$M_{2\,max}$ Nm
1500	GTN09 L1	3.43	438	7010	150	25	180-200-225-250	—	—	18100	23300	4740	27900
	GTN09 L1	4.09	367	7220	150	25	180-200-225-250	—	—	19000	24600	5030	29000
	GTN09 L1	5.25	286	7600	150	25	180-200-225-250	—	—	20500	26500	5470	29000
	GTN09 L1	6.23	241	7900	150	25	180-200-225-250	—	—	21600	27900	5790	29000
	GTN09 L2	12.3	122	7890	60	18.0	132-160-180-200	—	—	26500	34200	7270	27900
	GTN09 L2	14.7	102	9410	60	18.0	132-160-180-200	—	—	28000	36100	7710	29000
	GTN09 L2	17.4	86	9730	60	18.0	132-160-180-200	—	—	29400	37900	8150	29000
	GTN09 L2	21.8	69	10100	60	18.0	132-160-180-200	—	—	31500	40600	8790	29000
	GTN09 L2	25.4	59	10500	60	18.0	132-160-180-200	—	—	32900	42500	9240	29000
	GTN09 L2	28.0	54	12500	60	18.0	132-160-180-200	—	—	33900	43700	9550	29000
	GTN09 L2	32.6	46	13000	60	18.0	132-160-180-200	—	—	35500	45800	10000	29000
	GTN09 L2	38.6	39	12500	54	18.0	132-160-180-200	—	—	37400	48200	10600	29000
	GTN09 L2	46.7	32	12500	45	18.0	132-160-180-200	—	—	39600	51000	11300	29000
	GTN09 L3	51.3	29.3	13400	30	11.0	71-80-90-100-112-132-160	—	—	40700	52400	11700	29000
	GTN09 L3	60.5	24.8	14100	30	11.0	71-80-90-100-112-132-160	—	—	42700	55100	12300	29000
	GTN09 L3	74.1	20.2	15000	30	11.0	71-80-90-100-112-132-160	—	—	45400	58600	13200	29000
	GTN09 L3	80.6	18.6	14800	30	11.0	71-80-90-100-112-132-160	—	—	46600	60100	13600	29000
	GTN09 L3	93.0	16.1	15100	28	11.0	71-80-90-100-112-132-160	—	—	48600	62700	14200	29000

B

GTN09 L

23240 Nm

n_1 min^{-1}		i	n_2 min^{-1}	M_{n2} Nm	P_{n1} kW	Pt kW	P (IEC) -	Rn_2 [N] LK	LS	HK/MK	HS/MS	LSH	$M_{2\,max}$ Nm
1500	GTN09 L3	100	15	16500	28	11.0	71-80-90-100-112-132-160	—	—	49700	64100	14600	29000
	GTN09 L3	113	13.2	15500	24	11.0	71-80-90-100-112-132-160	—	—	51600	66500	15200	29000
	GTN09 L3	126	11.9	16400	22	11.0	71-80-90-100-112-132-160	—	—	53200	68700	15800	29000
	GTN09 L3	139	10.8	16000	19.9	11.0	71-80-90-100-112-132-160	—	—	54800	70700	16300	29000
	GTN09 L3	162	9.3	16300	17.3	11.0	71-80-90-100-112-132-160	—	—	57400	74000	17100	29000
	GTN09 L3	183	8.2	14300	13.5	11.0	71-80-90-100-112-132-160	—	—	59500	76800	17800	29000
	GTN09 L3	202	7.4	16500	14.1	11.0	71-80-90-100-112-132-160	—	—	61300	79100	18400	29000
	GTN09 L3	223	6.7	13000	10.0	11.0	71-80-90-100-112-132-160	—	—	63200	81500	19100	29000
	GTN09 L3	239	6.3	13000	9.4	11.0	71-80-90-100-112-132-160	—	—	64600	83300	19500	29000
	GTN09 L3	284	5.3	15700	9.6	11.0	71-80-90-100-112-132-160	—	—	67900	87600	20700	29000
	GTN09 L3	336	4.5	13200	6.8	11.0	71-80-90-100-112-132-160	—	—	71500	92200	21900	29000
	GTN09 L4	349	4.3	21300	10.8	7.5	71-80-90-100-112-132-160	—	—	72300	93300	22100	29000
	GTN09 L4	406	3.7	17800	7.8	7.5	71-80-90-100-112-132-160	—	—	75600	97500	23300	29000
	GTN09 L4	465	3.2	18300	7.0	7.5	71-80-90-100-112-132-160	—	—	78800	101600	24400	29000
	GTN09 L4	509	2.9	14300	5.0	7.5	71-80-90-100-112-132-160	—	—	81000	104400	25100	29000
	GTN09 L4	579	2.6	21300	6.5	7.5	71-80-90-100-112-132-160	—	—	84100	108500	26200	29000
	GTN09 L4	654	2.3	18100	4.9	7.5	71-80-90-100-112-132-160	—	—	87300	112600	27300	29000
	GTN09 L4	722	2.1	21300	5.2	7.5	71-80-90-100-112-132-160	—	—	89900	116000	28200	29000
	GTN09 L4	801	1.9	18200	4.0	7.5	71-80-90-100-112-132-160	—	—	92800	119600	29200	29000
	GTN09 L4	906	1.7	17900	3.5	7.5	71-80-90-100-112-132-160	—	—	96300	124200	30400	29000
	GTN09 L4	999	1.5	18200	3.2	7.5	71-80-90-100-112-132-160	—	—	99100	127800	31400	29000
	GTN09 L4	1149	1.3	16200	2.5	7.5	71-80-90-100-112-132-160	—	—	103400	133300	32900	29000
	GTN09 L4	1286	1.2	16500	2.3	7.5	71-80-90-100-112-132-160	—	—	106900	137900	34200	29000
	GTN09 L4	1380	1.1	16700	2.2	7.5	71-80-90-100-112-132-160	—	—	109200	140900	35000	29000
	GTN09 L4	1605	0.93	17000	1.9	7.5	71-80-90-100-112-132-160	—	—	110000	145000	36000	29000
	GTN09 L4	1723	0.87	17000	1.8	7.5	71-80-90-100-112-132-160	—	—	110000	145000	36000	29000
	GTN09 L4	2003	0.75	17000	1.5	7.5	71-80-90-100-112-132-160	—	—	110000	145000	36000	29000
	GTN09 L4	2423	0.62	17000	1.2	7.5	71-80-90-100-112-132-160	—	—	110000	145000	36000	29000
1000	GTN09 L1	3.43	292	7920	150	30	180-200-225-250	—	—	20400	26300	5430	27900
	GTN09 L1	4.09	244	8150	150	30	180-200-225-250	—	—	21500	27700	5760	29000
	GTN09 L1	5.25	190	8580	150	30	180-200-225-250	—	—	23200	29900	6260	29000
	GTN09 L1	6.23	160	8920	150	30	180-200-225-250	—	—	24400	31500	6620	29000
	GTN09 L2	12.3	81	8900	60	22	132-160-180-200	—	—	30000	38600	8320	27900
	GTN09 L2	14.7	68	10600	60	22	132-160-180-200	—	—	31600	40700	8820	29000
	GTN09 L2	17.4	58	11000	60	22	132-160-180-200	—	—	33200	42800	9330	29000
	GTN09 L2	21.8	46	11400	58	22	132-160-180-200	—	—	35500	45800	10100	29000
	GTN09 L2	25.4	39	11500	50	22	132-160-180-200	—	—	37200	48000	10600	29000
	GTN09 L2	28.0	36	13500	53	22	132-160-180-200	—	—	38300	49400	10900	29000
	GTN09 L2	32.6	31	13800	47	22	132-160-180-200	—	—	40100	51700	11500	29000
	GTN09 L2	38.6	25.9	12600	36	22	132-160-180-200	—	—	42200	54400	12200	29000
	GTN09 L2	46.7	21.4	12700	30	22	132-160-180-200	—	—	44700	57600	13000	29000
	GTN09 L3	51.3	19.5	14900	30	13.2	71-80-90-100-112-132-160	—	—	45900	59200	13400	29000
	GTN09 L3	60.5	16.5	16000	30	13.2	71-80-90-100-112-132-160	—	—	48300	62300	14100	29000
	GTN09 L3	74.1	13.5	17000	26	13.2	71-80-90-100-112-132-160	—	—	51300	66200	15100	29000
	GTN09 L3	80.6	12.4	15700	22	13.2	71-80-90-100-112-132-160	—	—	52600	67800	15500	29000
	GTN09 L3	93.0	10.8	16800	21	13.2	71-80-90-100-112-132-160	—	—	54900	70800	16300	29000
	GTN09 L3	100	10.0	18600	21	13.2	71-80-90-100-112-132-160	—	—	56200	72400	16700	29000
	GTN09 L3	113	8.8	16300	16.5	13.2	71-80-90-100-112-132-160	—	—	58300	75100	17400	29000
	GTN09 L3	126	7.9	17300	15.7	13.2	71-80-90-100-112-132-160	—	—	60100	77600	18000	29000
	GTN09 L3	139	7.2	16500	13.7	13.2	71-80-90-100-112-132-160	—	—	61900	79900	18600	29000
	GTN09 L3	162	6.2	16700	11.9	13.2	71-80-90-100-112-132-160	—	—	64800	83600	19600	29000
	GTN09 L3	183	5.5	14300	9.0	13.2	71-80-90-100-112-132-160	—	—	67200	86700	20400	29000
	GTN09 L3	202	5.0	17000	9.7	13.2	71-80-90-100-112-132-160	—	—	69300	89300	21100	29000
	GTN09 L3	223	4.5	13200	6.8	13.2	71-80-90-100-112-132-160	—	—	71400	92100	21800	29000
	GTN09 L3	239	4.2	13300	6.4	13.2	71-80-90-100-112-132-160	—	—	72900	94000	22300	29000
	GTN09 L3	284	3.5	15800	6.4	13.2	71-80-90-100-112-132-160	—	—	76700	98900	23600	29000
	GTN09 L3	336	3.0	14000	4.8	13.2	71-80-90-100-112-132-160	—	—	80800	104200	25000	29000
	GTN09 L4	349	2.9	21300	7.2	9.0	71-80-90-100-112-132-160	—	—	81700	105300	25300	29000
	GTN09 L4	406	2.5	19100	5.6	9.0	71-80-90-100-112-132-160	—	—	85400	110200	26600	29000
	GTN09 L4	465	2.2	19500	5.0	9.0	71-80-90-100-112-132-160	—	—	89000	114800	27900	29000
	GTN09 L4	509	2.0	14400	3.3	9.0	71-80-90-100-112-132-160	—	—	91500	117900	28700	29000
	GTN09 L4	579	1.7	21400	4.4	9.0	71-80-90-100-112-132-160	—	—	95000	122600	30000	29000

B

GTN09 L

23240 Nm

n_1 min^{-1}		i	n_2 min^{-1}	M_{n2} Nm	P_{n1} kW	Pt kW	P (IEC)	Rn_2 [N] LK	LS	HK/MK	HS/MS	LSH	$M_{2\,max}$ Nm
1000	GTN09 L4	654	1.5	18200	3.3	9.0	71-80-90-100-112-132-160	—	—	98600	127100	31200	29000
	GTN09 L4	722	1.4	21500	3.5	9.0	71-80-90-100-112-132-160	—	—	101600	131000	32300	29000
	GTN09 L4	801	1.2	18300	2.7	9.0	71-80-90-100-112-132-160	—	—	104700	135100	33400	29000
	GTN09 L4	906	1.1	18400	2.4	9.0	71-80-90-100-112-132-160	—	—	108700	140200	34800	29000
	GTN09 L4	999	1.0	18300	2.2	9.0	71-80-90-100-112-132-160	—	—	110000	144400	36000	29000
	GTN09 L4	1149	0.87	17000	1.7	9.0	71-80-90-100-112-132-160	—	—	110000	145000	36000	29000
	GTN09 L4	1286	0.78	17000	1.6	9.0	71-80-90-100-112-132-160	—	—	110000	145000	36000	29000
	GTN09 L4	1380	0.72	17000	1.5	9.0	71-80-90-100-112-132-160	—	—	110000	145000	36000	29000
	GTN09 L4	1605	0.62	17000	1.3	9.0	71-80-90-100-112-132-160	—	—	110000	145000	36000	29000
	GTN09 L4	1723	0.58	17000	1.2	9.0	71-80-90-100-112-132-160	—	—	110000	145000	36000	29000
	GTN09 L4	2003	0.50	17000	1.0	9.0	71-80-90-100-112-132-160	—	—	110000	145000	36000	29000
	GTN09 L4	2423	0.41	17000	0.83	9.0	71-80-90-100-112-132-160	—	—	110000	145000	36000	29000
500	GTN09 L1	3.43	146	9750	150	50	180-200-225-250	—	—	25100	32400	6840	27900
	GTN09 L1	4.09	122	10000	132	50	180-200-225-250	—	—	26500	34200	7250	29000
	GTN09 L1	5.25	95	10600	109	50	180-200-225-250	—	—	28500	36800	7880	29000
	GTN09 L1	6.23	80	10900	94	50	180-200-225-250	—	—	30000	38800	8350	29000
	GTN09 L2	12.3	41	10600	48	36	132-160-180-200	—	—	36900	47600	10500	27900
	GTN09 L2	14.7	34	12900	49	36	132-160-180-200	—	—	38900	50200	11100	29000
	GTN09 L2	17.4	28.8	13500	43	36	132-160-180-200	—	—	40900	52700	11800	29000
	GTN09 L2	21.8	22.9	13700	35	36	132-160-180-200	—	—	43800	56400	12700	29000
	GTN09 L2	25.4	19.7	12800	28	36	132-160-180-200	—	—	45800	59000	13300	29000
	GTN09 L2	28.0	17.9	14900	30	36	132-160-180-200	—	—	47200	60800	13800	29000
	GTN09 L2	32.6	15.4	15200	26	36	132-160-180-200	—	—	49300	63600	14500	29000
	GTN09 L2	38.6	12.9	12900	18.6	36	132-160-180-200	—	—	51900	67000	15300	29000
	GTN09 L2	46.7	10.7	13000	15.4	36	132-160-180-200	—	—	55000	70900	16300	29000
	GTN09 L3	51.3	9.8	17700	19.8	22	71-80-90-100-112-132-160	—	—	56500	72900	16800	29000
	GTN09 L3	60.5	8.3	19300	18.3	22	71-80-90-100-112-132-160	—	—	59400	76600	17800	29000
	GTN09 L3	74.1	6.7	20100	15.5	22	71-80-90-100-112-132-160	—	—	63200	81500	19100	29000
	GTN09 L3	80.6	6.2	16700	11.9	22	71-80-90-100-112-132-160	—	—	64800	83500	19600	29000
	GTN09 L3	93.0	5.4	17500	10.8	22	71-80-90-100-112-132-160	—	—	67600	87200	20600	29000
	GTN09 L3	100	5.0	21300	12.2	22	71-80-90-100-112-132-160	—	—	69200	89200	21100	29000
	GTN09 L3	113	4.4	17100	8.7	22	71-80-90-100-112-132-160	—	—	71700	92500	21900	29000
	GTN09 L3	126	4.0	17500	8.0	22	71-80-90-100-112-132-160	—	—	74000	95500	22700	29000
	GTN09 L3	139	3.6	17500	7.2	22	71-80-90-100-112-132-160	—	—	76200	98300	23500	29000
	GTN09 L3	162	3.1	18400	6.5	22	71-80-90-100-112-132-160	—	—	79800	102900	24700	29000
	GTN09 L3	183	2.7	14300	4.5	22	71-80-90-100-112-132-160	—	—	82800	106800	25700	29000
	GTN09 L3	202	2.5	19100	5.4	22	71-80-90-100-112-132-160	—	—	85300	110000	26600	29000
	GTN09 L3	223	2.2	14700	3.8	22	71-80-90-100-112-132-160	—	—	87900	113300	27500	29000
	GTN09 L3	239	2.1	14900	3.6	22	71-80-90-100-112-132-160	—	—	89800	115800	28200	29000
	GTN09 L3	284	1.8	15800	3.2	22	71-80-90-100-112-132-160	—	—	94500	121800	29800	29000
	GTN09 L3	336	1.5	15800	2.7	22	71-80-90-100-112-132-160	—	—	99400	128200	31500	29000
	GTN09 L4	349	1.4	21500	3.6	15.0	71-80-90-100-112-132-160	—	—	100500	129700	31900	29000
	GTN09 L4	406	1.2	21300	3.1	15.0	71-80-90-100-112-132-160	—	—	105200	135600	33600	29000
	GTN09 L4	465	1.1	21700	2.8	15.0	71-80-90-100-112-132-160	—	—	109600	141300	35100	29000
	GTN09 L4	509	0.98	14700	1.7	15.0	71-80-90-100-112-132-160	—	—	110000	145000	36000	29000
	GTN09 L4	579	0.86	21600	2.2	15.0	71-80-90-100-112-132-160	—	—	110000	145000	36000	29000
	GTN09 L4	654	0.77	18300	1.7	15.0	71-80-90-100-112-132-160	—	—	110000	145000	36000	29000
	GTN09 L4	722	0.69	21600	1.8	15.0	71-80-90-100-112-132-160	—	—	110000	145000	36000	29000
	GTN09 L4	801	0.62	18300	1.4	15.0	71-80-90-100-112-132-160	—	—	110000	145000	36000	29000
	GTN09 L4	906	0.55	18500	1.2	15.0	71-80-90-100-112-132-160	—	—	110000	145000	36000	29000
	GTN09 L4	999	0.50	18300	1.1	15.0	71-80-90-100-112-132-160	—	—	110000	145000	36000	29000
	GTN09 L4	1149	0.44	17000	0.87	15.0	71-80-90-100-112-132-160	—	—	110000	145000	36000	29000
	GTN09 L4	1286	0.39	17000	0.78	15.0	71-80-90-100-112-132-160	—	—	110000	145000	36000	29000
	GTN09 L4	1380	0.36	17000	0.73	15.0	71-80-90-100-112-132-160	—	—	110000	145000	36000	29000
	GTN09 L4	1605	0.31	17000	0.63	15.0	71-80-90-100-112-132-160	—	—	110000	145000	36000	29000
	GTN09 L4	1723	0.29	17000	0.58	15.0	71-80-90-100-112-132-160	—	—	110000	145000	36000	29000
	GTN09 L4	2003	0.25	17000	0.50	15.0	71-80-90-100-112-132-160	—	—	110000	145000	36000	29000
	GTN09 L4	2423	0.21	17000	0.42	15.0	71-80-90-100-112-132-160	—	—	110000	145000	36000	29000

B

GTN10 L

34120 Nm

n_1 min^{-1}		i	n_2 min^{-1}	M_{n2} Nm	P_{n1} kW	Pt kW	P (IEC)	Rn_2 [N] LK	LS	HK/MK	HS/MS	LSH	$M_{2\,max}$ Nm
1500	GTN10 L1	4.09	367	7330	175	35	200-225-250	—	—	22600	28400	9080	47600
	GTN10 L1	5.25	286	7710	175	35	200-225-250	—	—	24300	30600	9870	47600
	GTN10 L1	6.23	241	8020	175	35	200-225-250	—	—	25600	32200	10400	47600
	GTN10 L2	14.7	102	10800	75	22	160-180-200-225-250	—	—	33100	41700	13900	47600
	GTN10 L2	17.4	86	11300	75	22	160-180-200-225-250	—	—	34800	43800	14700	47600
	GTN10 L2	21.8	69	12100	75	22	160-180-200-225-250	—	—	37300	46900	15900	47600
	GTN10 L2	25.4	59	12700	75	22	160-180-200-225-250	—	—	39000	49100	16700	47600
	GTN10 L2	28.0	54	12800	75	22	160-180-200-225-250	—	—	40200	50500	17200	47600
	GTN10 L2	30.7	49	13400	73	22	160-180-200-225-250	—	—	41300	51900	17800	47600
	GTN10 L2	32.6	46	13300	68	22	160-180-200-225-250	—	—	42000	52900	18100	47600
	GTN10 L2	38.6	39	13600	59	22	160-180-200-225-250	—	—	44300	55700	19200	47600
	GTN10 L2	46.7	32	14200	51	22	160-180-200-225-250	—	—	46900	58900	20500	47600
	GTN10 L3	53.0	28.3	15800	40	18.0	132-160-180-200	—	—	48700	61200	21300	47600
	GTN10 L3	62.6	24.0	16600	40	18.0	132-160-180-200	—	—	51200	64300	22500	47600
	GTN10 L3	73.9	20.3	17500	40	18.0	132-160-180-200	—	—	53800	67600	23800	47600
	GTN10 L3	80.3	18.7	17500	37	18.0	132-160-180-200	—	—	55100	69300	24500	47600
	GTN10 L3	91.3	16.4	18600	35	18.0	132-160-180-200	—	—	57300	72100	25600	47600
	GTN10 L3	101	14.9	18700	32	18.0	132-160-180-200	—	—	59000	74200	26400	47600
	GTN10 L3	110	13.6	19700	31	18.0	132-160-180-200	—	—	60700	76300	27200	47600
	GTN10 L3	119	12.6	19700	28	18.0	132-160-180-200	—	—	62000	78000	27900	47600
	GTN10 L3	130	11.5	20700	27	18.0	132-160-180-200	—	—	63800	80200	28800	47600
	GTN10 L3	142	10.6	20700	25	18.0	132-160-180-200	—	—	65400	82200	29600	47600
	GTN10 L3	164	9.2	22200	23	18.0	132-160-180-200	—	—	68300	85800	31100	47600
	GTN10 L3	177	8.5	18300	17.7	18.0	132-160-180-200	—	—	69900	87900	31900	47600
	GTN10 L3	202	7.4	22000	18.8	18.0	132-160-180-200	—	—	72700	91400	33300	47600
	GTN10 L3	230	6.5	21200	15.8	18.0	132-160-180-200	—	—	75600	95100	34800	47600
	GTN10 L3	249	6.0	18400	12.7	18.0	132-160-180-200	—	—	77400	97400	35700	47600
	GTN10 L3	295	5.1	23300	13.6	18.0	132-160-180-200	—	—	81500	102500	37800	47600
	GTN10 L3	350	4.3	19000	9.3	18.0	132-160-180-200	—	—	85800	107900	40000	47600
	GTN10 L4	392	3.8	19400	8.8	11.0	71-80-90-100-112-132-160	—	—	88700	111500	41500	47600
	GTN10 L4	451	3.3	29800	11.7	11.0	71-80-90-100-112-132-160	—	—	92500	116300	43500	47600
	GTN10 L4	507	3.0	25500	8.9	11.0	71-80-90-100-112-132-160	—	—	95800	120500	45300	47600
	GTN10 L4	556	2.7	31600	10.1	11.0	71-80-90-100-112-132-160	—	—	98500	123900	46700	47600
	GTN10 L4	637	2.4	26500	7.4	11.0	71-80-90-100-112-132-160	—	—	102600	129000	48800	47600
	GTN10 L4	726	2.1	27100	6.6	11.0	71-80-90-100-112-132-160	—	—	106700	134200	51000	47600
	GTN10 L4	818	1.8	27600	6.0	11.0	71-80-90-100-112-132-160	—	—	110600	139100	53100	47600
	GTN10 L4	939	1.6	33200	6.3	11.0	71-80-90-100-112-132-160	—	—	115300	145000	55600	47600
	GTN10 L4	1021	1.5	28700	5.0	11.0	71-80-90-100-112-132-160	—	—	118200	148600	57200	47600
	GTN10 L4	1164	1.3	29300	4.5	11.0	71-80-90-100-112-132-160	—	—	123000	154600	59700	47600
	GTN10 L4	1259	1.2	27600	3.9	11.0	71-80-90-100-112-132-160	—	—	125900	158300	61300	47600
	GTN10 L4	1438	1.0	25800	3.2	11.0	71-80-90-100-112-132-160	—	—	131000	164700	64100	47600
	GTN10 L4	1672	0.90	26000	2.8	11.0	71-80-90-100-112-132-160	—	—	133000	166000	65000	47600
	GTN10 L4	1794	0.84	26000	2.6	11.0	71-80-90-100-112-132-160	—	—	133000	166000	65000	47600
	GTN10 L4	2022	0.74	26000	2.3	11.0	71-80-90-100-112-132-160	—	—	133000	166000	65000	47600
	GTN10 L4	2523	0.59	26000	1.8	11.0	71-80-90-100-112-132-160	—	—	133000	166000	65000	47600
1000	GTN10 L1	4.09	244	8280	175	42	200-225-250	—	—	25500	32100	10400	47600
	GTN10 L1	5.25	190	8710	175	42	200-225-250	—	—	27500	34500	11300	47600
	GTN10 L1	6.23	160	9060	157	42	200-225-250	—	—	28900	36400	12000	47600
	GTN10 L2	14.7	68	12200	75	26	160-180-200-225-250	—	—	37400	47100	15900	47600
	GTN10 L2	17.4	58	12800	75	26	160-180-200-225-250	—	—	39300	49500	16800	47600
	GTN10 L2	21.8	46	13700	70	26	160-180-200-225-250	—	—	42100	53000	18200	47600
	GTN10 L2	25.4	39	14300	63	26	160-180-200-225-250	—	—	44100	55400	19100	47600
	GTN10 L2	28.0	36	14400	57	26	160-180-200-225-250	—	—	45400	57100	19700	47600
	GTN10 L2	30.7	33	14900	54	26	160-180-200-225-250	—	—	46700	58700	20300	47600
	GTN10 L2	32.6	31	15100	52	26	160-180-200-225-250	—	—	47500	59700	20800	47600
	GTN10 L2	38.6	25.9	14800	43	26	160-180-200-225-250	—	—	50000	62900	22000	47600
	GTN10 L2	46.7	21.4	15500	37	26	160-180-200-225-250	—	—	52900	66600	23400	47600
	GTN10 L3	53.0	18.9	17800	39	22	132-160-180-200	—	—	55000	69100	24400	47600
	GTN10 L3	62.6	16.0	18800	34	22	132-160-180-200	—	—	57800	72700	25800	47600
	GTN10 L3	73.9	13.5	19700	31	22	132-160-180-200	—	—	60700	76400	27300	47600
	GTN10 L3	80.3	12.4	19800	28	22	132-160-180-200	—	—	62300	78300	28000	47600

B

GTN10 L

34120 Nm

n_1 min^{-1}		i	n_2 min^{-1}	M_{n2} Nm	P_{n1} kW	Pt kW	P (IEC)	Rn_2 [N] LK	LS	HK/MK	HS/MS	LSH	$M_{2\,max}$ Nm
1000	GTN10 L3	91.3	11.0	21000	26	22	132-160-180-200	—	—	64700	81400	29300	47600
	GTN10 L3	101	9.9	21100	24	22	132-160-180-200	—	—	66700	83800	30300	47600
	GTN10 L3	110	9.1	22200	23	22	132-160-180-200	—	—	68500	86200	31200	47600
	GTN10 L3	119	8.4	21600	21	22	132-160-180-200	—	—	70100	88100	32000	47600
	GTN10 L3	130	7.7	23400	21	22	132-160-180-200	—	—	72000	90600	33000	47600
	GTN10 L3	142	7.1	22200	18.0	22	132-160-180-200	—	—	73800	92800	33900	47600
	GTN10 L3	164	6.1	25000	17.5	22	132-160-180-200	—	—	77100	96900	35600	47600
	GTN10 L3	177	5.6	18400	11.9	22	132-160-180-200	—	—	79000	99300	36500	47600
	GTN10 L3	202	5.0	23400	13.3	22	132-160-180-200	—	—	82100	103200	38100	47600
	GTN10 L3	230	4.3	21800	10.9	22	132-160-180-200	—	—	85400	107400	39800	47600
	GTN10 L3	249	4.0	19300	8.9	22	132-160-180-200	—	—	87500	110000	40900	47600
	GTN10 L3	295	3.4	24700	9.6	22	132-160-180-200	—	—	92000	115700	43300	47600
	GTN10 L3	350	2.9	20600	6.8	22	132-160-180-200	—	—	96900	121800	45800	47600
	GTN10 L4	392	2.6	21100	6.4	13.2	71-80-90-100-112-132-160	—	—	100200	125900	47600	47600
	GTN10 L4	451	2.2	32600	8.5	13.2	71-80-90-100-112-132-160	—	—	104500	131400	49800	47600
	GTN10 L4	507	2.0	27300	6.4	13.2	71-80-90-100-112-132-160	—	—	108200	136100	51800	47600
	GTN10 L4	556	1.8	33000	7.0	13.2	71-80-90-100-112-132-160	—	—	111300	139900	53400	47600
	GTN10 L4	637	1.6	28400	5.3	13.2	71-80-90-100-112-132-160	—	—	115900	145700	55900	47600
	GTN10 L4	726	1.4	29000	4.7	13.2	71-80-90-100-112-132-160	—	—	120500	151500	58400	47600
	GTN10 L4	818	1.2	29600	4.3	13.2	71-80-90-100-112-132-160	—	—	124900	157100	60800	47600
	GTN10 L4	939	1.1	34000	4.3	13.2	71-80-90-100-112-132-160	—	—	130200	163700	63600	47600
	GTN10 L4	1021	0.98	30600	3.5	13.2	71-80-90-100-112-132-160	—	—	133000	166000	65000	47600
	GTN10 L4	1164	0.86	30600	3.1	13.2	71-80-90-100-112-132-160	—	—	133000	166000	65000	47600
	GTN10 L4	1259	0.79	28000	2.6	13.2	71-80-90-100-112-132-160	—	—	133000	166000	65000	47600
	GTN10 L4	1438	0.70	26000	2.1	13.2	71-80-90-100-112-132-160	—	—	133000	166000	65000	47600
	GTN10 L4	1672	0.60	26000	1.8	13.2	71-80-90-100-112-132-160	—	—	133000	166000	65000	47600
	GTN10 L4	1794	0.56	26000	1.7	13.2	71-80-90-100-112-132-160	—	—	133000	166000	65000	47600
	GTN10 L4	2022	0.49	26000	1.5	13.2	71-80-90-100-112-132-160	—	—	133000	166000	65000	47600
	GTN10 L4	2523	0.40	26000	1.2	13.2	71-80-90-100-112-132-160	—	—	133000	166000	65000	47600
500	GTN10 L1	4.09	122	10200	134	70	200-225-250	—	—	31400	39500	13100	47600
	GTN10 L1	5.25	95	10700	110	70	200-225-250	—	—	33800	42500	14200	47600
	GTN10 L1	6.23	80	11200	97	70	200-225-250	—	—	35600	44800	15100	47600
	GTN10 L2	14.7	34	15000	57	44	160-180-200-225-250	—	—	46100	58000	20100	47600
	GTN10 L2	17.4	28.8	15700	50	44	160-180-200-225-250	—	—	48400	60900	21200	47600
	GTN10 L2	21.8	22.9	16800	43	44	160-180-200-225-250	—	—	51900	65200	22900	47600
	GTN10 L2	25.4	19.7	17600	39	44	160-180-200-225-250	—	—	54200	68200	24100	47600
	GTN10 L2	28.0	17.9	17700	35	44	160-180-200-225-250	—	—	55900	70300	24900	47600
	GTN10 L2	30.7	16.3	17800	32	44	160-180-200-225-250	—	—	57400	72200	25600	47600
	GTN10 L2	32.6	15.4	18600	32	44	160-180-200-225-250	—	—	58500	73500	26100	47600
	GTN10 L2	38.6	12.9	17200	25	44	160-180-200-225-250	—	—	61500	77400	27700	47600
	GTN10 L2	46.7	10.7	18000	21	44	160-180-200-225-250	—	—	65200	81900	29500	47600
	GTN10 L3	53.0	9.4	22000	24	36	132-160-180-200	—	—	67700	85100	30800	47600
	GTN10 L3	62.6	8.0	23100	21	36	132-160-180-200	—	—	71100	89400	32500	47600
	GTN10 L3	73.9	6.8	24300	18.8	36	132-160-180-200	—	—	74800	94000	34400	47600
	GTN10 L3	80.3	6.2	22600	16.2	36	132-160-180-200	—	—	76700	96400	35300	47600
	GTN10 L3	91.3	5.5	25900	16.2	36	132-160-180-200	—	—	79700	100200	36900	47600
	GTN10 L3	101	5.0	23400	13.3	36	132-160-180-200	—	—	82100	103200	38100	47600
	GTN10 L3	110	4.5	27300	14.2	36	132-160-180-200	—	—	84400	106100	39300	47600
	GTN10 L3	119	4.2	24000	11.6	36	132-160-180-200	—	—	86300	108500	40300	47600
	GTN10 L3	130	3.8	28700	12.6	36	132-160-180-200	—	—	88700	111500	41500	47600
	GTN10 L3	142	3.5	24800	10.0	36	132-160-180-200	—	—	90900	114300	42700	47600
	GTN10 L3	164	3.1	30300	10.6	36	132-160-180-200	—	—	94900	119300	44800	47600
	GTN10 L3	177	2.8	20700	6.7	36	132-160-180-200	—	—	97200	122200	46000	47600
	GTN10 L3	202	2.5	26300	7.5	36	132-160-180-200	—	—	101100	127100	48000	47600
	GTN10 L3	230	2.2	21800	5.4	36	132-160-180-200	—	—	105100	132200	50200	47600
	GTN10 L3	249	2.0	22300	5.1	36	132-160-180-200	—	—	107700	135400	51500	47600
	GTN10 L3	295	1.7	26800	5.2	36	132-160-180-200	—	—	113300	142500	54500	47600
	GTN10 L3	350	1.4	24000	3.9	36	132-160-180-200	—	—	119300	150000	57700	47600
	GTN10 L4	392	1.3	24600	3.7	22	71-80-90-100-112-132-160	—	—	123300	155100	59900	47600
	GTN10 L4	451	1.1	33900	4.5	22	71-80-90-100-112-132-160	—	—	128600	161700	62800	47600
	GTN10 L4	507	0.99	30600	3.6	22	71-80-90-100-112-132-160	—	—	133000	166000	65000	47600
	GTN10 L4	556	0.90	34100	3.6	22	71-80-90-100-112-132-160	—	—	133000	166000	65000	47600

B

GTN10 L — 34120 Nm

n_1 min^{-1}		i	n_2 min^{-1}	M_{n2} Nm	P_{n1} kW	Pt kW	P (IEC)	Rn_2 [N] LK	LS	HK/MK	HS/MS	LSH	$M_{2\,max}$ Nm
500	GTN10 L4	637	0.79	30600	2.8	22	71-80-90-100-112-132-160	—	—	133000	166000	65000	47600
	GTN10 L4	726	0.69	30600	2.5	22	71-80-90-100-112-132-160	—	—	133000	166000	65000	47600
	GTN10 L4	818	0.61	30600	2.2	22	71-80-90-100-112-132-160	—	—	133000	166000	65000	47600
	GTN10 L4	939	0.53	34100	2.1	22	71-80-90-100-112-132-160	—	—	133000	166000	65000	47600
	GTN10 L4	1021	0.49	30600	1.8	22	71-80-90-100-112-132-160	—	—	133000	166000	65000	47600
	GTN10 L4	1164	0.43	30600	1.6	22	71-80-90-100-112-132-160	—	—	133000	166000	65000	47600
	GTN10 L4	1259	0.40	28000	1.3	22	71-80-90-100-112-132-160	—	—	133000	166000	65000	47600
	GTN10 L4	1438	0.35	26000	1.1	22	71-80-90-100-112-132-160	—	—	133000	166000	65000	47600
	GTN10 L4	1672	0.30	26000	0.92	22	71-80-90-100-112-132-160	—	—	133000	166000	65000	47600
	GTN10 L4	1794	0.28	26000	0.86	22	71-80-90-100-112-132-160	—	—	133000	166000	65000	47600
	GTN10 L4	2022	0.25	26000	0.76	22	71-80-90-100-112-132-160	—	—	133000	166000	65000	47600
	GTN10 L4	2523	0.20	26000	0.61	22	71-80-90-100-112-132-160	—	—	133000	166000	65000	47600

GTN11 L — 48330 Nm

n_1 min^{-1}		i	n_2 min^{-1}	M_{n2} Nm	P_{n1} kW	Pt kW	P (IEC)	Rn_2 [N] LK	LS	HK/MK	HS/MS	LSH	$M_{2\,max}$ Nm
1500	GTN11 L1	4.09	367	10600	200	35	—	—	—	26700	33200	9080	58300
	GTN11 L1	5.25	286	11700	200	35	—	—	—	28700	35800	9870	58300
	GTN11 L1	6.23	241	11600	200	35	—	—	—	30300	37700	10400	58300
	GTN11 L2	14.0	107	15300	115	26	180-200-225-250	—	—	38600	48100	13700	58300
	GTN11 L2	16.7	90	16100	115	26	180-200-225-250	—	—	40700	50700	14500	58300
	GTN11 L2	18.0	83	16900	115	26	180-200-225-250	—	—	41600	51800	14900	58300
	GTN11 L2	21.5	70	17400	115	26	180-200-225-250	—	—	43900	54600	15800	58300
	GTN11 L2	25.5	59	18300	115	26	180-200-225-250	—	—	46200	57500	16700	58300
	GTN11 L2	27.6	54	19200	115	26	180-200-225-250	—	—	47300	58900	17200	58300
	GTN11 L2	32.7	46	20200	103	26	180-200-225-250	—	—	49800	62000	18200	58300
	GTN11 L2	38.8	39	19700	85	26	180-200-225-250	—	—	52400	65300	19200	58300
	GTN11 L3	50.5	29.7	22400	60	18.0	132-160-180-200	—	—	56700	70600	21000	58300
	GTN11 L3	60.2	24.9	23700	60	18.0	132-160-180-200	—	—	59800	74500	22300	58300
	GTN11 L3	71.1	21.1	24900	60	18.0	132-160-180-200	—	—	62800	78300	23500	58300
	GTN11 L3	77.3	19.4	25500	57	18.0	132-160-180-200	—	—	64400	80200	24200	58300
	GTN11 L3	89.3	16.8	26600	51	18.0	132-160-180-200	—	—	67300	83800	25400	58300
	GTN11 L3	104	14.5	27800	46	18.0	132-160-180-200	—	—	70400	87600	26700	58300
	GTN11 L3	115	13.1	28700	43	18.0	132-160-180-200	—	—	72500	90300	27600	58300
	GTN11 L3	126	12.0	29500	40	18.0	132-160-180-200	—	—	74500	92800	28400	58300
	GTN11 L3	133	11.3	30000	39	18.0	132-160-180-200	—	—	75800	94500	29000	58300
	GTN11 L3	147	10.2	31800	37	18.0	132-160-180-200	—	—	78100	97300	30000	58300
	GTN11 L3	161	9.3	31800	34	18.0	132-160-180-200	—	—	80300	100000	30900	58300
	GTN11 L3	171	8.8	32600	33	18.0	132-160-180-200	—	—	81700	101800	31500	58300
	GTN11 L3	191	7.8	32200	29	18.0	132-160-180-200	—	—	84500	105300	32700	58300
	GTN11 L3	203	7.4	33400	28	18.0	132-160-180-200	—	—	86000	107200	33400	58300
	GTN11 L3	245	6.1	34300	24	18.0	132-160-180-200	—	—	91100	113500	35500	58300
	GTN11 L3	291	5.2	27000	16.0	18.0	132-160-180-200	—	—	95900	119400	37600	58300
	GTN11 L4	348	4.3	39800	20	11.0	71-80-90-100-112-132-160	—	—	101100	126000	39900	58300
	GTN11 L4	410	3.7	41500	18.0	11.0	71-80-90-100-112-132-160	—	—	106300	132400	42200	58300
	GTN11 L4	512	2.9	44000	15.2	11.0	71-80-90-100-112-132-160	—	—	113600	141500	45400	58300
	GTN11 L4	568	2.6	43000	13.4	11.0	71-80-90-100-112-132-160	—	—	117200	145900	47000	58300
	GTN11 L4	627	2.4	39800	11.3	11.0	71-80-90-100-112-132-160	—	—	120700	150300	48600	58300
	GTN11 L4	724	2.1	46300	11.4	11.0	71-80-90-100-112-132-160	—	—	126000	157000	51000	58300
	GTN11 L4	825	1.8	44600	9.6	11.0	71-80-90-100-112-132-160	—	—	131000	163200	53300	58300
	GTN11 L4	904	1.7	46900	9.2	11.0	71-80-90-100-112-132-160	—	—	134700	167800	54900	58300
	GTN11 L4	986	1.5	42500	7.7	11.0	71-80-90-100-112-132-160	—	—	138300	172200	56500	58300
	GTN11 L4	1058	1.4	43000	7.2	11.0	71-80-90-100-112-132-160	—	—	141200	175900	57900	58300
	GTN11 L4	1230	1.2	43900	6.3	11.0	71-80-90-100-112-132-160	—	—	147800	184000	60800	58300
	GTN11 L4	1415	1.1	42800	5.4	11.0	71-80-90-100-112-132-160	—	—	154100	191900	63800	58300
	GTN11 L4	1680	0.89	34000	3.6	11.0	71-80-90-100-112-132-160	—	—	157000	195000	65000	58300
	GTN11 L4	1766	0.85	43000	4.3	11.0	71-80-90-100-112-132-160	—	—	157000	195000	65000	58300
	GTN11 L4	2096	0.72	34000	2.9	11.0	71-80-90-100-112-132-160	—	—	157000	195000	65000	58300
1000	GTN11 L1	4.09	244	11900	200	42	—	—	—	30100	37500	10400	58300

B

GTN11 L

48330 Nm

n_1 min^{-1}		i	n_2 min^{-1}	M_{n2} Nm	P_{n1} kW	Pt kW	P (IEC)	Rn_2 [N] LK	LS	HK/MK	HS/MS	LSH	$M_{2\,max}$ Nm
1000	GTN11 L1	5.25	190	13200	200	42	—	—	—	32500	40400	11300	58300
	GTN11 L1	6.23	160	13100	200	42	—	—	—	34200	42600	12000	58300
	GTN11 L2	14.0	71	17300	115	31	180-200-225-250	—	—	43600	54300	15700	58300
	GTN11 L2	16.7	60	18200	115	31	180-200-225-250	—	—	46000	57300	16600	58300
	GTN11 L2	18.0	56	19100	115	31	180-200-225-250	—	—	47000	58500	17000	58300
	GTN11 L2	21.5	47	19600	102	31	180-200-225-250	—	—	49500	61700	18100	58300
	GTN11 L2	25.5	39	20600	90	31	180-200-225-250	—	—	52200	65000	19100	58300
	GTN11 L2	27.6	36	21700	88	31	180-200-225-250	—	—	53400	66500	19600	58300
	GTN11 L2	32.7	31	22800	78	31	180-200-225-250	—	—	56200	70000	20800	58300
	GTN11 L2	38.8	25.8	21700	62	31	180-200-225-250	—	—	59200	73700	22000	58300
	GTN11 L3	50.5	19.8	25300	58	22	132-160-180-200	—	—	64000	79700	24000	58300
	GTN11 L3	60.2	16.6	26700	51	22	132-160-180-200	—	—	67500	84100	25500	58300
	GTN11 L3	71.1	14.1	28100	45	22	132-160-180-200	—	—	71000	88400	26900	58300
	GTN11 L3	77.3	12.9	28800	43	22	132-160-180-200	—	—	72800	90600	27700	58300
	GTN11 L3	89.3	11.2	30100	39	22	132-160-180-200	—	—	76000	94600	29000	58300
	GTN11 L3	104	9.6	31400	35	22	132-160-180-200	—	—	79500	99000	30500	58300
	GTN11 L3	115	8.7	32400	32	22	132-160-180-200	—	—	81900	102000	31600	58300
	GTN11 L3	126	8.0	33300	30	22	132-160-180-200	—	—	84100	104800	32500	58300
	GTN11 L3	133	7.5	33900	29	22	132-160-180-200	—	—	85600	106700	33200	58300
	GTN11 L3	147	6.8	33800	26	22	132-160-180-200	—	—	88200	109900	34300	58300
	GTN11 L3	161	6.2	35900	26	22	132-160-180-200	—	—	90700	112900	35400	58300
	GTN11 L3	171	5.9	34500	23	22	132-160-180-200	—	—	92300	115000	36100	58300
	GTN11 L3	191	5.2	34300	21	22	132-160-180-200	—	—	95500	118900	37400	58300
	GTN11 L3	203	4.9	35300	20.0	22	132-160-180-200	—	—	97200	121000	38200	58300
	GTN11 L3	245	4.1	36400	17.0	22	132-160-180-200	—	—	102900	128100	40700	58300
	GTN11 L3	291	3.4	28300	11.2	22	132-160-180-200	—	—	108300	134900	43100	58300
	GTN11 L4	348	2.9	44200	15.0	13.2	71-80-90-100-112-132-160	—	—	114200	142300	45700	58300
	GTN11 L4	410	2.4	45900	13.2	13.2	71-80-90-100-112-132-160	—	—	120000	149500	48300	58300
	GTN11 L4	512	2.0	46500	10.7	13.2	71-80-90-100-112-132-160	—	—	128300	159800	52000	58300
	GTN11 L4	568	1.8	44700	9.3	13.2	71-80-90-100-112-132-160	—	—	132300	164800	53800	58300
	GTN11 L4	627	1.6	42200	8.0	13.2	71-80-90-100-112-132-160	—	—	136300	169800	55600	58300
	GTN11 L4	724	1.4	47400	7.7	13.2	71-80-90-100-112-132-160	—	—	142300	177300	58400	58300
	GTN11 L4	825	1.2	46200	6.6	13.2	71-80-90-100-112-132-160	—	—	148000	184300	61000	58300
	GTN11 L4	904	1.1	48000	6.3	13.2	71-80-90-100-112-132-160	—	—	152100	189500	62800	58300
	GTN11 L4	986	1.0	45100	5.4	13.2	71-80-90-100-112-132-160	—	—	156100	194500	64700	58300
	GTN11 L4	1058	0.94	45200	5.1	13.2	71-80-90-100-112-132-160	—	—	157000	195000	65000	58300
	GTN11 L4	1230	0.81	45200	4.3	13.2	71-80-90-100-112-132-160	—	—	157000	195000	65000	58300
	GTN11 L4	1415	0.71	43000	3.6	13.2	71-80-90-100-112-132-160	—	—	157000	195000	65000	58300
	GTN11 L4	1680	0.60	34000	2.4	13.2	71-80-90-100-112-132-160	—	—	157000	195000	65000	58300
	GTN11 L4	1766	0.57	43000	2.9	13.2	71-80-90-100-112-132-160	—	—	157000	195000	65000	58300
	GTN11 L4	2096	0.48	34000	1.9	13.2	71-80-90-100-112-132-160	—	—	157000	195000	65000	58300
500	GTN11 L1	4.09	122	14700	194	70	—	—	—	37100	46200	13100	58300
	GTN11 L1	5.25	95	16200	167	70	—	—	—	40000	49800	14200	58300
	GTN11 L1	6.23	80	16100	140	70	—	—	—	42100	52400	15100	58300
	GTN11 L2	14.0	36	21200	84	52	180-200-225-250	—	—	53700	66900	19800	58300
	GTN11 L2	16.7	29.9	22400	74	52	180-200-225-250	—	—	56600	70500	20900	58300
	GTN11 L2	18.0	27.8	23500	73	52	180-200-225-250	—	—	57800	72100	21500	58300
	GTN11 L2	21.5	23.3	24100	63	52	180-200-225-250	—	—	61000	76000	22800	58300
	GTN11 L2	25.5	19.6	25400	55	52	180-200-225-250	—	—	64200	80000	24100	58300
	GTN11 L2	27.6	18.1	26700	54	52	180-200-225-250	—	—	65700	81900	24700	58300
	GTN11 L2	32.7	15.3	28200	48	52	180-200-225-250	—	—	69200	86200	26200	58300
	GTN11 L2	38.8	12.9	25500	36	52	180-200-225-250	—	—	72800	90700	27700	58300
	GTN11 L3	50.5	9.9	31200	35	36	132-160-180-200	—	—	78800	98200	30300	58300
	GTN11 L3	60.2	8.3	32900	31	36	132-160-180-200	—	—	83100	103500	32100	58300
	GTN11 L3	71.1	7.0	34600	28	36	132-160-180-200	—	—	87400	108800	33900	58300
	GTN11 L3	77.3	6.5	35400	26	36	132-160-180-200	—	—	89600	111600	34900	58300
	GTN11 L3	89.3	5.6	37000	24	36	132-160-180-200	—	—	93500	116500	36600	58300
	GTN11 L3	104	4.8	38700	21	36	132-160-180-200	—	—	97800	121900	38500	58300
	GTN11 L3	115	4.4	39200	19.7	36	132-160-180-200	—	—	100800	125500	39800	58300
	GTN11 L3	126	4.0	40600	18.6	36	132-160-180-200	—	—	103600	129000	41000	58300
	GTN11 L3	133	3.8	40300	17.4	36	132-160-180-200	—	—	105400	131300	41800	58300

B

GTN11 L — 48330 Nm

n_1 min^{-1}		i	n_2 min^{-1}	M_{n2} Nm	P_{n1} kW	Pt kW	P (IEC)	Rn_2 [N] LK	LS	HK/MK	HS/MS	LSH	$M_{2\,max}$ Nm
500	GTN11 L3	147	3.4	37600	14.7	36	132-160-180-200	—	—	108600	135300	43200	58300
	GTN11 L3	161	3.1	41700	14.9	36	132-160-180-200	—	—	111600	139000	44600	58300
	GTN11 L3	171	2.9	38500	12.9	36	132-160-180-200	—	—	113600	141500	45400	58300
	GTN11 L3	191	2.6	34500	10.4	36	132-160-180-200	—	—	117500	146400	47200	58300
	GTN11 L3	203	2.5	39600	11.2	36	132-160-180-200	—	—	119600	149000	48100	58300
	GTN11 L3	245	2.0	40300	9.4	36	132-160-180-200	—	—	126600	157800	51300	58300
	GTN11 L3	291	1.7	31300	6.2	36	132-160-180-200	—	—	133300	166100	54300	58300
	GTN11 L4	348	1.4	47300	8.1	22	71-80-90-100-112-132-160	—	—	140600	175100	57600	58300
	GTN11 L4	410	1.2	47800	6.9	22	71-80-90-100-112-132-160	—	—	147800	184100	60900	58300
	GTN11 L4	512	0.98	48300	5.6	22	71-80-90-100-112-132-160	—	—	157000	195000	65000	58300
	GTN11 L4	568	0.88	46900	4.9	22	71-80-90-100-112-132-160	—	—	157000	195000	65000	58300
	GTN11 L4	627	0.80	45200	4.3	22	71-80-90-100-112-132-160	—	—	157000	195000	65000	58300
	GTN11 L4	724	0.69	48300	3.9	22	71-80-90-100-112-132-160	—	—	157000	195000	65000	58300
	GTN11 L4	825	0.61	46900	3.4	22	71-80-90-100-112-132-160	—	—	157000	195000	65000	58300
	GTN11 L4	904	0.55	48300	3.2	22	71-80-90-100-112-132-160	—	—	157000	195000	65000	58300
	GTN11 L4	986	0.51	45200	2.7	22	71-80-90-100-112-132-160	—	—	157000	195000	65000	58300
	GTN11 L4	1058	0.47	45200	2.5	22	71-80-90-100-112-132-160	—	—	157000	195000	65000	58300
	GTN11 L4	1230	0.41	45200	2.2	22	71-80-90-100-112-132-160	—	—	157000	195000	65000	58300
	GTN11 L4	1415	0.35	43000	1.8	22	71-80-90-100-112-132-160	—	—	157000	195000	65000	58300
	GTN11 L4	1680	0.30	34000	1.2	22	71-80-90-100-112-132-160	—	—	157000	195000	65000	58300
	GTN11 L4	1766	0.28	43000	1.4	22	71-80-90-100-112-132-160	—	—	157000	195000	65000	58300
	GTN11 L4	2096	0.24	34000	0.96	22	71-80-90-100-112-132-160	—	—	157000	195000	65000	58300

GTN13 L — 57970 Nm

n_1 min^{-1}		i	n_2 min^{-1}	M_{n2} Nm	P_{n1} kW	Pt kW	P (IEC)	Rn_2 [N] LK	LS	HK/MK	HS/MS	LSH	$M_{2\,max}$ Nm
1500	GTN13 L2	14.2	106	22600	150	30	180-200-225-250	—	—	47900	56700	16900	105000
	GTN13 L2	16.9	89	23500	150	30	180-200-225-250	—	—	50500	59700	18000	105000
	GTN13 L2	18.5	81	24100	150	30	180-200-225-250	—	—	51800	61400	18500	105000
	GTN13 L2	21.8	69	25500	150	30	180-200-225-250	—	—	54400	64400	19500	105000
	GTN13 L2	25.8	58	26700	150	30	180-200-225-250	—	—	57300	67800	20700	105000
	GTN13 L2	28.4	53	27300	150	30	180-200-225-250	—	—	58900	69700	21300	105000
	GTN13 L2	33.6	45	28800	143	30	180-200-225-250	—	—	62000	73400	22600	105000
	GTN13 L2	40.5	37	29500	122	30	180-200-225-250	—	—	65600	77600	24000	105000
	GTN13 L3	51.1	29.3	32700	60	18.0	132-160-180-200	—	—	70300	83200	25900	105000
	GTN13 L3	61.0	24.6	34500	60	18.0	132-160-180-200	—	—	74100	87700	27500	105000
	GTN13 L3	72.0	20.8	36300	60	18.0	132-160-180-200	—	—	77900	92200	29100	105000
	GTN13 L3	78.3	19.2	37300	60	18.0	132-160-180-200	—	—	79900	94600	29900	105000
	GTN13 L3	92.4	16.2	39300	60	18.0	132-160-180-200	—	—	84000	99400	31600	105000
	GTN13 L3	110	13.7	41200	60	18.0	132-160-180-200	—	—	88400	104600	33500	105000
	GTN13 L3	120	12.4	42100	60	18.0	132-160-180-200	—	—	90900	107600	34500	105000
	GTN13 L3	135	11.1	44000	56	18.0	132-160-180-200	—	—	94100	111300	35800	105000
	GTN13 L3	143	10.5	44400	53	18.0	132-160-180-200	—	—	95700	113300	36500	105000
	GTN13 L3	151	9.9	45000	51	18.0	132-160-180-200	—	—	97300	115200	37200	105000
	GTN13 L3	163	9.2	46000	49	18.0	132-160-180-200	—	—	99600	117800	38200	105000
	GTN13 L3	176	8.5	45000	44	18.0	132-160-180-200	—	—	101800	120500	39100	105000
	GTN13 L3	182	8.2	39000	37	18.0	132-160-180-200	—	—	102900	121800	39600	105000
	GTN13 L3	194	7.7	47600	42	18.0	132-160-180-200	—	—	104800	124100	40400	105000
	GTN13 L3	209	7.2	45000	37	18.0	132-160-180-200	—	—	107200	126900	41400	105000
	GTN13 L3	252	5.9	45000	31	18.0	132-160-180-200	—	—	113500	134300	44200	105000
	GTN13 L3	304	4.9	39100	22	18.0	132-160-180-200	—	—	120000	142000	47000	105000
	GTN13 L4	352	4.3	52500	26	11.0	71-80-90-100-112-132-160	—	—	125400	148400	49300	105000
	GTN13 L4	394	3.8	55000	25	11.0	71-80-90-100-112-132-160	—	—	129700	153500	51200	105000
	GTN13 L4	452	3.3	54000	21	11.0	71-80-90-100-112-132-160	—	—	135200	160000	53600	105000
	GTN13 L4	514	2.9	48600	16.8	11.0	71-80-90-100-112-132-160	—	—	140500	166300	56000	105000
	GTN13 L4	564	2.7	54800	17.2	11.0	71-80-90-100-112-132-160	—	—	144500	171000	57700	105000
	GTN13 L4	633	2.4	52000	14.6	11.0	71-80-90-100-112-132-160	—	—	149600	177000	60000	105000
	GTN13 L4	695	2.2	51000	13.0	11.0	71-80-90-100-112-132-160	—	—	153800	182100	61900	105000
	GTN13 L4	790	1.9	52200	11.7	11.0	71-80-90-100-112-132-160	—	—	159800	189200	64600	105000
	GTN13 L4	889	1.7	53100	10.6	11.0	71-80-90-100-112-132-160	—	—	165600	196000	67200	105000

B

GTN13 L

57970 Nm

n_1 min^{-1}		i	n_2 min^{-1}	M_{n2} Nm	P_{n1} kW	Pt kW	P (IEC)	Rn_2 [N] LK	LS	HK/MK	HS/MS	LSH	$M_{2\,max}$ Nm
1500	GTN13 L4	1014	1.5	54300	9.5	11.0	71-80-90-100-112-132-160	—	—	172300	203900	70200	105000
	GTN13 L4	1117	1.3	52500	8.3	11.0	71-80-90-100-112-132-160	—	—	177300	209900	72500	105000
	GTN13 L4	1266	1.2	56300	7.9	11.0	71-80-90-100-112-132-160	—	—	184100	217900	75600	105000
	GTN13 L4	1394	1.1	52700	6.7	11.0	71-80-90-100-112-132-160	—	—	189500	224300	78100	105000
	GTN13 L4	1502	1.00	58000	6.8	11.0	71-80-90-100-112-132-160	—	—	192000	229400	80000	105000
	GTN13 L4	1817	0.83	58000	5.7	11.0	71-80-90-100-112-132-160	—	—	192000	231000	80000	105000
	GTN13 L4	2187	0.69	49000	4.0	11.0	71-80-90-100-112-132-160	—	—	192000	231000	80000	105000
1000	GTN13 L2	14.2	70	25600	150	36	180-200-225-250	—	—	54100	64000	19400	105000
	GTN13 L2	16.9	59	26500	150	36	180-200-225-250	—	—	57000	67500	20500	105000
	GTN13 L2	18.5	54	27200	150	36	180-200-225-250	—	—	58500	69300	21200	105000
	GTN13 L2	21.8	46	28700	147	36	180-200-225-250	—	—	61400	72700	22300	105000
	GTN13 L2	25.8	39	30100	130	36	180-200-225-250	—	—	64700	76600	23600	105000
	GTN13 L2	28.4	35	30900	121	36	180-200-225-250	—	—	66500	78700	24400	105000
	GTN13 L2	33.6	29.7	32500	107	36	180-200-225-250	—	—	70000	82900	25800	105000
	GTN13 L2	40.5	24.7	32200	88	36	180-200-225-250	—	—	74000	87600	27500	105000
	GTN13 L3	51.1	19.6	37000	60	22	132-160-180-200	—	—	79400	94000	29700	105000
	GTN13 L3	61.0	16.4	39000	60	22	132-160-180-200	—	—	83700	99100	31500	105000
	GTN13 L3	72.0	13.9	41000	60	22	132-160-180-200	—	—	88000	104100	33300	105000
	GTN13 L3	78.3	12.8	42200	60	22	132-160-180-200	—	—	90200	106800	34200	105000
	GTN13 L3	92.4	10.8	44300	55	22	132-160-180-200	—	—	94800	112200	36200	105000
	GTN13 L3	110	9.1	46100	48	22	132-160-180-200	—	—	99800	118200	38300	105000
	GTN13 L3	120	8.3	45000	43	22	132-160-180-200	—	—	102700	121500	39500	105000
	GTN13 L3	135	7.4	49300	42	22	132-160-180-200	—	—	106200	125700	41000	105000
	GTN13 L3	143	7.0	45000	36	22	132-160-180-200	—	—	108100	127900	41800	105000
	GTN13 L3	151	6.6	45000	34	22	132-160-180-200	—	—	109900	130100	42600	105000
	GTN13 L3	163	6.1	50200	35	22	132-160-180-200	—	—	112500	133100	43700	105000
	GTN13 L3	176	5.7	45000	29	22	132-160-180-200	—	—	115000	136100	44800	105000
	GTN13 L3	182	5.5	39000	25	22	132-160-180-200	—	—	116200	137500	45300	105000
	GTN13 L3	194	5.2	51700	31	22	132-160-180-200	—	—	118400	140100	46300	105000
	GTN13 L3	209	4.8	45300	25	22	132-160-180-200	—	—	121100	143300	47400	105000
	GTN13 L3	252	4.0	46500	21	22	132-160-180-200	—	—	128200	151700	50600	105000
	GTN13 L3	304	3.3	41000	15.5	22	132-160-180-200	—	—	135500	160400	53800	105000
	GTN13 L4	352	2.8	52500	17.6	13.2	71-80-90-100-112-132-160	—	—	141600	167600	56500	105000
	GTN13 L4	394	2.5	55000	16.5	13.2	71-80-90-100-112-132-160	—	—	146500	173400	58700	105000
	GTN13 L4	452	2.2	55100	14.4	13.2	71-80-90-100-112-132-160	—	—	152700	180700	61400	105000
	GTN13 L4	514	1.9	51900	11.9	13.2	71-80-90-100-112-132-160	—	—	158700	187800	64100	105000
	GTN13 L4	564	1.8	55200	11.6	13.2	71-80-90-100-112-132-160	—	—	163100	193100	66100	105000
	GTN13 L4	633	1.6	52400	9.8	13.2	71-80-90-100-112-132-160	—	—	168900	199900	68700	105000
	GTN13 L4	695	1.4	54500	9.3	13.2	71-80-90-100-112-132-160	—	—	173700	205600	70900	105000
	GTN13 L4	790	1.3	52600	7.9	13.2	71-80-90-100-112-132-160	—	—	180500	213600	74000	105000
	GTN13 L4	889	1.1	56800	7.6	13.2	71-80-90-100-112-132-160	—	—	187100	221400	76900	105000
	GTN13 L4	1014	0.99	58000	6.8	13.2	71-80-90-100-112-132-160	—	—	192000	230300	80000	105000
	GTN13 L4	1117	0.90	52800	5.6	13.2	71-80-90-100-112-132-160	—	—	192000	231000	80000	105000
	GTN13 L4	1266	0.79	58000	5.4	13.2	71-80-90-100-112-132-160	—	—	192000	231000	80000	105000
	GTN13 L4	1394	0.72	52800	4.5	13.2	71-80-90-100-112-132-160	—	—	192000	231000	80000	105000
	GTN13 L4	1502	0.67	58000	4.6	13.2	71-80-90-100-112-132-160	—	—	192000	231000	80000	105000
	GTN13 L4	1817	0.55	58000	3.8	13.2	71-80-90-100-112-132-160	—	—	192000	231000	80000	105000
	GTN13 L4	2187	0.46	49000	2.7	13.2	71-80-90-100-112-132-160	—	—	192000	231000	80000	105000
500	GTN13 L1	4.14	121	21700	250	95	—	—	—	46000	54400	16200	105000
	GTN13 L1	5.40	93	23100	231	95	—	—	—	49800	58900	17700	105000
	GTN13 L1	6.50	77	24400	202	95	—	—	—	52700	62300	18800	105000
	GTN13 L2	14.2	35	31500	124	60	180-200-225-250	—	—	66600	78800	24400	105000
	GTN13 L2	16.9	29.5	32700	107	60	180-200-225-250	—	—	70200	83100	25900	105000
	GTN13 L2	18.5	27.0	33400	100	60	180-200-225-250	—	—	72100	85300	26700	105000
	GTN13 L2	21.8	23.0	35400	90	60	180-200-225-250	—	—	75600	89500	28100	105000
	GTN13 L2	25.8	19.4	37100	80	60	180-200-225-250	—	—	79600	94200	29800	105000
	GTN13 L2	28.4	17.6	38000	75	60	180-200-225-250	—	—	81900	96900	30700	105000
	GTN13 L2	33.6	14.9	40000	66	60	180-200-225-250	—	—	86200	102000	32500	105000
	GTN13 L2	40.5	12.3	37300	51	60	180-200-225-250	—	—	91200	107900	34600	105000
	GTN13 L3	51.1	9.8	45300	51	36	132-160-180-200	—	—	97800	115700	37400	105000
	GTN13 L3	61.0	8.2	47200	44	36	132-160-180-200	—	—	103100	122000	39700	105000

B

GTN13 L — 57970 Nm

n_1 min^{-1}		i	n_2 min^{-1}	M_{n2} Nm	P_{n1} kW	Pt kW	P (IEC)	Rn_2 [N] LK	LS	HK/MK	HS/MS	LSH	$M_{2\,max}$ Nm
500	GTN13 L3	72.0	6.9	48900	39	36	132-160-180-200	—	—	108300	128200	41900	105000
	GTN13 L3	78.3	6.4	51400	38	36	132-160-180-200	—	—	111100	131500	43100	105000
	GTN13 L3	92.4	5.4	53800	33	36	132-160-180-200	—	—	116800	138200	45600	105000
	GTN13 L3	110	4.6	52000	27	36	132-160-180-200	—	—	122900	145500	48300	105000
	GTN13 L3	120	4.1	46200	22	36	132-160-180-200	—	—	126400	149600	49800	105000
	GTN13 L3	135	3.7	55000	23	36	132-160-180-200	—	—	130800	154800	51700	105000
	GTN13 L3	143	3.5	47400	19.0	36	132-160-180-200	—	—	133100	157500	52700	105000
	GTN13 L3	151	3.3	47800	18.1	36	132-160-180-200	—	—	135300	160200	53700	105000
	GTN13 L3	163	3.1	54300	19.1	36	132-160-180-200	—	—	138500	163900	55100	105000
	GTN13 L3	176	2.8	48800	15.9	36	132-160-180-200	—	—	141600	167600	56500	105000
	GTN13 L3	182	2.7	41900	13.2	36	132-160-180-200	—	—	143100	169300	57100	105000
	GTN13 L3	194	2.6	52000	15.4	36	132-160-180-200	—	—	145800	172500	58300	105000
	GTN13 L3	209	2.4	50100	13.8	36	132-160-180-200	—	—	149100	176400	59800	105000
	GTN13 L3	252	2.0	51700	11.8	36	132-160-180-200	—	—	157800	186800	63700	105000
	GTN13 L3	304	1.6	45300	8.6	36	132-160-180-200	—	—	166800	197500	67800	105000
	GTN13 L4	352	1.4	54300	9.1	22	71-80-90-100-112-132-160	—	—	174400	206400	71200	105000
	GTN13 L4	394	1.3	55300	8.3	22	71-80-90-100-112-132-160	—	—	180400	213500	73900	105000
	GTN13 L4	452	1.1	55400	7.2	22	71-80-90-100-112-132-160	—	—	187900	222400	77300	105000
	GTN13 L4	514	0.97	58000	6.7	22	71-80-90-100-112-132-160	—	—	192000	231000	80000	105000
	GTN13 L4	564	0.89	55400	5.8	22	71-80-90-100-112-132-160	—	—	192000	231000	80000	105000
	GTN13 L4	633	0.79	52800	4.9	22	71-80-90-100-112-132-160	—	—	192000	231000	80000	105000
	GTN13 L4	695	0.72	58000	4.9	22	71-80-90-100-112-132-160	—	—	192000	231000	80000	105000
	GTN13 L4	790	0.63	52800	4.0	22	71-80-90-100-112-132-160	—	—	192000	231000	80000	105000
	GTN13 L4	889	0.56	58000	3.9	22	71-80-90-100-112-132-160	—	—	192000	231000	80000	105000
	GTN13 L4	1014	0.49	58000	3.4	22	71-80-90-100-112-132-160	—	—	192000	231000	80000	105000
	GTN13 L4	1117	0.45	52800	2.8	22	71-80-90-100-112-132-160	—	—	192000	231000	80000	105000
	GTN13 L4	1266	0.40	58000	2.7	22	71-80-90-100-112-132-160	—	—	192000	231000	80000	105000
	GTN13 L4	1394	0.36	52800	2.2	22	71-80-90-100-112-132-160	—	—	192000	231000	80000	105000
	GTN13 L4	1502	0.33	58000	2.3	22	71-80-90-100-112-132-160	—	—	192000	231000	80000	105000
	GTN13 L4	1817	0.28	58000	1.9	22	71-80-90-100-112-132-160	—	—	192000	231000	80000	105000
	GTN13 L4	2187	0.23	49000	1.3	22	71-80-90-100-112-132-160	—	—	192000	231000	80000	105000

GTN14 L — 84000 Nm

n_1 min^{-1}		i	n_2 min^{-1}	M_{n2} Nm	P_{n1} kW	Pt kW	P (IEC)	Rn_2 [N] LK	LS	HK/MK	HS/MS	LSH	$M_{2\,max}$ Nm
1500	GTN14 L2	17.4	86	33100	175	40	200-225-250	—	—	54300	63800	20400	115000
	GTN14 L2	22.3	67	37400	175	40	200-225-250	—	—	58500	68700	22100	115000
	GTN14 L2	26.5	57	37300	175	40	200-225-250	—	—	61600	72300	23400	115000
	GTN14 L2	28.0	54	38200	175	40	200-225-250	—	—	62700	73600	23900	115000
	GTN14 L2	33.2	45	40200	175	40	200-225-250	—	—	66000	77400	25300	115000
	GTN14 L2	38.6	39	35300	152	40	200-225-250	—	—	69000	81000	26600	115000
	GTN14 L3	62.6	24.0	48600	75	25	160-180-200-225-250	—	—	79800	93600	31200	115000
	GTN14 L3	73.9	20.3	51100	75	25	160-180-200-225-250	—	—	83800	98400	33000	115000
	GTN14 L3	92.7	16.2	54700	75	25	160-180-200-225-250	—	—	89700	105400	35600	115000
	GTN14 L3	108	13.9	57200	75	25	160-180-200-225-250	—	—	93900	110200	37400	115000
	GTN14 L3	138	10.8	64800	75	25	160-180-200-225-250	—	—	101200	118800	40700	115000
	GTN14 L3	164	9.1	64200	67	25	160-180-200-225-250	—	—	106500	125100	43100	115000
	GTN14 L3	174	8.6	63000	62	25	160-180-200-225-250	—	—	108300	127200	43900	115000
	GTN14 L3	206	7.3	63800	53	25	160-180-200-225-250	—	—	114000	133900	46400	115000
	GTN14 L3	240	6.3	52000	37	25	160-180-200-225-250	—	—	119300	140100	48800	115000
	GTN14 L4	314	4.8	77800	40	15.0	132-160-180-200	—	—	129400	151900	53400	115000
	GTN14 L4	388	3.9	78500	36	15.0	132-160-180-200	—	—	137900	161900	57300	115000
	GTN14 L4	458	3.3	79100	31	15.0	132-160-180-200	—	—	144900	170100	60600	115000
	GTN14 L4	495	3.0	79300	28	15.0	132-160-180-200	—	—	148300	174100	62200	115000
	GTN14 L4	554	2.7	79700	26	15.0	132-160-180-200	—	—	153400	180100	64600	115000
	GTN14 L4	588	2.6	79900	24	15.0	132-160-180-200	—	—	156200	183400	65900	115000
	GTN14 L4	668	2.2	80500	21	15.0	132-160-180-200	—	—	162300	190600	68700	115000
	GTN14 L4	738	2.0	80900	19.5	15.0	132-160-180-200	—	—	167200	196300	71000	115000
	GTN14 L4	858	1.7	81500	16.9	15.0	132-160-180-200	—	—	174900	205400	74700	115000

B

GTN14 L

84000 Nm

n_1 min^{-1}		i	n_2 min^{-1}	M_{n2} Nm	P_{n1} kW	Pt kW	P (IEC)	Rn_2 [N] LK	LS	HK/MK	HS/MS	LSH	$M_{2\,max}$ Nm
1500	GTN14 L4	926	1.6	74000	14.2	15.0	132-160-180-200	—	—	179000	210100	76600	115000
	GTN14 L4	1038	1.4	82400	14.1	15.0	132-160-180-200	—	—	185200	217400	79600	115000
	GTN14 L4	1099	1.4	75800	12.2	15.0	132-160-180-200	—	—	188400	221200	81100	115000
	GTN14 L4	1277	1.2	77400	10.8	15.0	132-160-180-200	—	—	197100	231400	85300	115000
	GTN14 L4	1485	1.0	66700	8.0	15.0	132-160-180-200	—	—	206000	242100	89700	115000
	GTN14 L4	1796	0.84	66800	6.6	15.0	132-160-180-200	—	—	206000	243000	90000	115000
1000	GTN14 L2	17.4	58	37400	175	48	200-225-250	—	—	61300	72000	23300	115000
	GTN14 L2	22.3	45	42200	175	48	200-225-250	—	—	66100	77600	25300	115000
	GTN14 L2	26.5	38	42100	175	48	200-225-250	—	—	69600	81700	26800	115000
	GTN14 L2	28.0	36	43100	171	48	200-225-250	—	—	70800	83100	27300	115000
	GTN14 L2	33.2	30	45300	152	48	200-225-250	—	—	74500	87500	28900	115000
	GTN14 L2	38.6	25.9	39600	114	48	200-225-250	—	—	77900	91500	30400	115000
	GTN14 L3	62.6	16.0	54900	75	30	160-180-200-225-250	—	—	90100	105800	35700	115000
	GTN14 L3	73.9	13.5	57700	75	30	160-180-200-225-250	—	—	94700	111200	37800	115000
	GTN14 L3	92.7	10.8	61800	75	30	160-180-200-225-250	—	—	101400	119000	40700	115000
	GTN14 L3	108	9.3	64600	69	30	160-180-200-225-250	—	—	106000	124500	42800	115000
	GTN14 L3	138	7.2	71400	59	30	160-180-200-225-250	—	—	114300	134200	46500	115000
	GTN14 L3	164	6.1	72900	51	30	160-180-200-225-250	—	—	120300	141200	49300	115000
	GTN14 L3	174	5.8	64800	43	30	160-180-200-225-250	—	—	122300	143600	50200	115000
	GTN14 L3	206	4.9	65600	37	30	160-180-200-225-250	—	—	128800	151200	53200	115000
	GTN14 L3	240	4.2	53400	26	30	160-180-200-225-250	—	—	134700	158200	55900	115000
	GTN14 L4	314	3.2	79200	30	18.0	132-160-180-200	—	—	146100	171600	61200	115000
	GTN14 L4	388	2.6	79900	24	18.0	132-160-180-200	—	—	155700	182800	65600	115000
	GTN14 L4	458	2.2	80600	21	18.0	132-160-180-200	—	—	163700	192200	69400	115000
	GTN14 L4	495	2.0	80900	19.4	18.0	132-160-180-200	—	—	167500	196600	71200	115000
	GTN14 L4	554	1.8	81400	17.4	18.0	132-160-180-200	—	—	173300	203500	73900	115000
	GTN14 L4	588	1.7	81700	16.4	18.0	132-160-180-200	—	—	176400	207100	75400	115000
	GTN14 L4	668	1.5	82200	14.6	18.0	132-160-180-200	—	—	183300	215200	78700	115000
	GTN14 L4	738	1.4	82700	13.3	18.0	132-160-180-200	—	—	188800	221700	81300	115000
	GTN14 L4	858	1.2	83300	11.5	18.0	132-160-180-200	—	—	197500	231900	85500	115000
	GTN14 L4	926	1.1	78300	10.0	18.0	132-160-180-200	—	—	202100	237300	87700	115000
	GTN14 L4	1038	0.96	84000	9.6	18.0	132-160-180-200	—	—	206000	243000	90000	115000
	GTN14 L4	1099	0.91	79200	8.5	18.0	132-160-180-200	—	—	206000	243000	90000	115000
	GTN14 L4	1277	0.78	79200	7.3	18.0	132-160-180-200	—	—	206000	243000	90000	115000
	GTN14 L4	1485	0.67	66800	5.3	18.0	132-160-180-200	—	—	206000	243000	90000	115000
	GTN14 L4	1796	0.56	66800	4.4	18.0	132-160-180-200	—	—	206000	243000	90000	115000
500	GTN14 L2	17.4	28.8	46000	147	80	200-225-250	—	—	75500	88700	29400	115000
	GTN14 L2	22.3	22.4	52000	130	80	200-225-250	—	—	81400	95600	31900	115000
	GTN14 L2	26.5	18.9	51700	109	80	200-225-250	—	—	85700	100600	33800	115000
	GTN14 L2	28.0	17.9	52700	105	80	200-225-250	—	—	87100	102300	34400	115000
	GTN14 L2	33.2	15.0	55400	93	80	200-225-250	—	—	91700	107700	36500	115000
	GTN14 L2	38.6	12.9	48300	70	80	200-225-250	—	—	96000	112700	38300	115000
	GTN14 L3	62.6	8.0	67500	62	50	160-180-200-225-250	—	—	110900	130200	45000	115000
	GTN14 L3	73.9	6.8	70900	55	50	160-180-200-225-250	—	—	116600	136900	47600	115000
	GTN14 L3	92.7	5.4	75900	47	50	160-180-200-225-250	—	—	124800	146500	51300	115000
	GTN14 L3	108	4.6	77900	41	50	160-180-200-225-250	—	—	130500	153300	54000	115000
	GTN14 L3	138	3.6	78700	33	50	160-180-200-225-250	—	—	140700	165200	58600	115000
	GTN14 L3	164	3.0	79300	28	50	160-180-200-225-250	—	—	148100	173900	62100	115000
	GTN14 L3	174	2.9	68700	23	50	160-180-200-225-250	—	—	150600	176800	63300	115000
	GTN14 L3	206	2.4	69900	19.5	50	160-180-200-225-250	—	—	158500	186100	67000	115000
	GTN14 L3	240	2.1	59200	14.2	50	160-180-200-225-250	—	—	165900	194700	70400	115000
	GTN14 L4	314	1.6	81900	15.4	30	132-160-180-200	—	—	179900	211200	77100	115000
	GTN14 L4	388	1.3	82900	12.6	30	132-160-180-200	—	—	191700	225100	82700	115000
	GTN14 L4	458	1.1	83600	10.8	30	132-160-180-200	—	—	201500	236600	87400	115000
	GTN14 L4	495	1.0	84000	10.0	30	132-160-180-200	—	—	206000	242100	89700	115000
	GTN14 L4	554	0.90	84000	9.0	30	132-160-180-200	—	—	206000	243000	90000	115000
	GTN14 L4	588	0.85	84000	8.4	30	132-160-180-200	—	—	206000	243000	90000	115000
	GTN14 L4	668	0.75	84000	7.4	30	132-160-180-200	—	—	206000	243000	90000	115000
	GTN14 L4	738	0.68	84000	6.7	30	132-160-180-200	—	—	206000	243000	90000	115000
	GTN14 L4	858	0.58	84000	5.8	30	132-160-180-200	—	—	206000	243000	90000	115000
	GTN14 L4	926	0.54	79200	5.1	30	132-160-180-200	—	—	206000	243000	90000	115000

B

GTN14 L — 84000 Nm

n_1 min^{-1}		i	n_2 min^{-1}	M_{n2} Nm	P_{n1} kW	Pt kW	P (IEC)	Rn_2 [N] LK	LS	HK/MK	HS/MS	LSH	$M_{2\,max}$ Nm
500	GTN14 L4	1038	0.48	84000	4.8	30	132-160-180-200	—	—	206000	243000	90000	115000
	GTN14 L4	1099	0.46	79200	4.3	30	132-160-180-200	—	—	206000	243000	90000	115000
	GTN14 L4	1277	0.39	79200	3.7	30	132-160-180-200	—	—	206000	243000	90000	115000
	GTN14 L4	1485	0.34	66800	2.7	30	132-160-180-200	—	—	206000	243000	90000	115000
	GTN14 L4	1796	0.28	66800	2.2	30	132-160-180-200	—	—	206000	243000	90000	115000

GTN15 L — 105000 Nm

n_1 min^{-1}		i	n_2 min^{-1}	M_{n2} Nm	P_{n1} kW	Pt kW	P (IEC)	Rn_2 [N] LK	LS	HK/MK	HS/MS	LSH	$M_{2\,max}$ Nm
1500	GTN15 L2	17.4	86	41400	200	42	—	—	—	54300	63800	20400	135000
	GTN15 L2	22.3	67	46800	200	42	—	—	—	58500	68700	22100	135000
	GTN15 L2	26.5	57	46600	200	42	—	—	—	61600	72300	23400	135000
	GTN15 L2	28.0	54	47800	200	42	—	—	—	62700	73600	23900	135000
	GTN15 L2	33.2	45	50300	200	42	—	—	—	66000	77400	25300	135000
	GTN15 L2	38.6	39	44100	190	42	—	—	—	69000	81000	26600	135000
	GTN15 L3	59.6	25.2	59900	115	30	180-200-225-250	—	—	78600	92300	30700	135000
	GTN15 L3	71.1	21.1	63100	115	30	180-200-225-250	—	—	82900	97300	32600	135000
	GTN15 L3	91.3	16.4	68000	115	30	180-200-225-250	—	—	89300	104900	35400	135000
	GTN15 L3	108	13.8	71600	114	30	180-200-225-250	—	—	94000	110400	37500	135000
	GTN15 L3	139	10.8	81100	100	30	180-200-225-250	—	—	101300	119000	40700	135000
	GTN15 L3	165	9.1	80400	84	30	180-200-225-250	—	—	106700	125200	43100	135000
	GTN15 L3	174	8.6	78800	78	30	180-200-225-250	—	—	108500	127400	43900	135000
	GTN15 L3	207	7.2	79800	66	30	180-200-225-250	—	—	114200	134100	46500	135000
	GTN15 L3	241	6.2	65000	46	30	180-200-225-250	—	—	119500	140300	48900	135000
	GTN15 L4	302	5.0	97000	57	18.0	132-160-180-200	—	—	127900	150200	52800	135000
	GTN15 L4	370	4.1	97900	47	18.0	132-160-180-200	—	—	135900	159500	56400	135000
	GTN15 L4	441	3.4	98700	40	18.0	132-160-180-200	—	—	143300	168200	59800	135000
	GTN15 L4	487	3.1	99100	36	18.0	132-160-180-200	—	—	147600	173300	61800	135000
	GTN15 L4	533	2.8	99500	33	18.0	132-160-180-200	—	—	151700	178100	63800	135000
	GTN15 L4	591	2.5	99900	30	18.0	132-160-180-200	—	—	156400	183600	66000	135000
	GTN15 L4	672	2.2	100600	27	18.0	132-160-180-200	—	—	162500	190800	68900	135000
	GTN15 L4	741	2.0	101100	24	18.0	132-160-180-200	—	—	167400	196600	71200	135000
	GTN15 L4	862	1.7	101900	21	18.0	132-160-180-200	—	—	175200	205700	74800	135000
	GTN15 L4	930	1.6	92600	17.6	18.0	132-160-180-200	—	—	179200	210400	76800	135000
	GTN15 L4	1043	1.4	103000	17.5	18.0	132-160-180-200	—	—	185500	217800	79700	135000
	GTN15 L4	1104	1.4	94800	15.2	18.0	132-160-180-200	—	—	188700	221500	81300	135000
	GTN15 L4	1284	1.2	96900	13.4	18.0	132-160-180-200	—	—	197400	231800	85400	135000
	GTN15 L4	1492	1.0	83400	9.9	18.0	132-160-180-200	—	—	206000	242500	89800	135000
	GTN15 L4	1805	0.83	83500	8.2	18.0	132-160-180-200	—	—	206000	243000	90000	135000
1000	GTN15 L2	17.4	58	46700	200	50	—	—	—	61300	72000	23300	135000
	GTN15 L2	22.3	45	52700	200	50	—	—	—	66100	77600	25300	135000
	GTN15 L2	26.5	38	52600	200	50	—	—	—	69600	81700	26800	135000
	GTN15 L2	28.0	36	53800	200	50	—	—	—	70800	83100	27300	135000
	GTN15 L2	33.2	30	56600	189	50	—	—	—	74500	87500	28900	135000
	GTN15 L2	38.6	25.9	49500	143	50	—	—	—	77900	91500	30400	135000
	GTN15 L3	59.6	16.8	67600	115	36	180-200-225-250	—	—	88800	104200	35200	135000
	GTN15 L3	71.1	14.1	71300	115	36	180-200-225-250	—	—	93600	109900	37300	135000
	GTN15 L3	91.3	11.0	76900	97	36	180-200-225-250	—	—	100900	118400	40500	135000
	GTN15 L3	108	9.2	80900	86	36	180-200-225-250	—	—	106200	124700	42900	135000
	GTN15 L3	139	7.2	89400	74	36	180-200-225-250	—	—	114400	134400	46600	135000
	GTN15 L3	165	6.1	91300	63	36	180-200-225-250	—	—	120500	141500	49400	135000
	GTN15 L3	174	5.7	81100	53	36	180-200-225-250	—	—	122500	143800	50300	135000
	GTN15 L3	207	4.8	82100	45	36	180-200-225-250	—	—	129000	151400	53200	135000
	GTN15 L3	241	4.2	66700	32	36	180-200-225-250	—	—	134900	158400	56000	135000
	GTN15 L4	302	3.3	98800	39	22	132-160-180-200	—	—	144500	169600	60400	135000
	GTN15 L4	370	2.7	99700	32	22	132-160-180-200	—	—	153500	180200	64600	135000
	GTN15 L4	441	2.3	100500	27	22	132-160-180-200	—	—	161800	190000	68500	135000

B

GTN15 L — 105000 Nm

n_1 min^{-1}		i	n_2 min^{-1}	M_{n2} Nm	P_{n1} kW	Pt kW	P (IEC)	Rn_2 [N] LK	LS	HK/MK	HS/MS	LSH	$M_{2\,max}$ Nm
1000	GTN15 L4	487	2.1	101100	25	22	132-160-180-200	—	—	166700	195700	70800	135000
	GTN15 L4	533	1.9	101500	23	22	132-160-180-200	—	—	171300	201100	73000	135000
	GTN15 L4	591	1.7	102100	20	22	132-160-180-200	—	—	176600	207400	75500	135000
	GTN15 L4	672	1.5	102800	18.1	22	132-160-180-200	—	—	183600	215500	78800	135000
	GTN15 L4	741	1.3	103300	16.5	22	132-160-180-200	—	—	189100	222000	81500	135000
	GTN15 L4	862	1.2	104200	14.3	22	132-160-180-200	—	—	197800	232300	85700	135000
	GTN15 L4	930	1.1	98000	12.5	22	132-160-180-200	—	—	202400	237700	87900	135000
	GTN15 L4	1043	0.96	105000	11.9	22	132-160-180-200	—	—	206000	243000	90000	135000
	GTN15 L4	1104	0.91	99000	10.6	22	132-160-180-200	—	—	206000	243000	90000	135000
	GTN15 L4	1284	0.78	99000	9.1	22	132-160-180-200	—	—	206000	243000	90000	135000
	GTN15 L4	1492	0.67	83500	6.6	22	132-160-180-200	—	—	206000	243000	90000	135000
	GTN15 L4	1805	0.55	83500	5.5	22	132-160-180-200	—	—	206000	243000	90000	135000
500	GTN15 L1	4.25	118	40800	260	60	—	—	—	49500	58100	18400	135000
	GTN15 L1	5.33	94	40500	260	60	—	—	—	53000	62200	19800	135000
	GTN15 L1	6.20	81	35500	260	60	—	—	—	55400	65100	20800	135000
	GTN15 L2	17.4	28.8	57500	184	84	—	—	—	75500	88700	29400	135000
	GTN15 L2	22.3	22.4	65000	162	84	—	—	—	81400	95600	31900	135000
	GTN15 L2	26.5	18.9	64600	136	84	—	—	—	85700	100600	33800	135000
	GTN15 L2	28.0	17.9	65900	131	84	—	—	—	87100	102300	34400	135000
	GTN15 L2	33.2	15.0	69200	116	84	—	—	—	91700	107700	36500	135000
	GTN15 L2	38.6	12.9	60400	87	84	—	—	—	96000	112700	38300	135000
	GTN15 L3	59.6	8.4	83200	80	60	180-200-225-250	—	—	109300	128300	44300	135000
	GTN15 L3	71.1	7.0	87700	71	60	180-200-225-250	—	—	115200	135300	47000	135000
	GTN15 L3	91.3	5.5	94400	59	60	180-200-225-250	—	—	124200	145800	51100	135000
	GTN15 L3	108	4.6	97300	52	60	180-200-225-250	—	—	130700	153500	54100	135000
	GTN15 L3	139	3.6	98400	41	60	180-200-225-250	—	—	140900	165400	58700	135000
	GTN15 L3	165	3.0	99200	34	60	180-200-225-250	—	—	148300	174100	62200	135000
	GTN15 L3	174	2.9	86000	28	60	180-200-225-250	—	—	150800	177100	63400	135000
	GTN15 L3	207	2.4	87400	24	60	180-200-225-250	—	—	158800	186400	67100	135000
	GTN15 L3	241	2.1	74000	17.6	60	180-200-225-250	—	—	166100	195000	70500	135000
	GTN15 L4	302	1.7	102200	20.0	36	132-160-180-200	—	—	177900	208800	76100	135000
	GTN15 L4	370	1.4	103300	16.5	36	132-160-180-200	—	—	188900	221800	81400	135000
	GTN15 L4	441	1.1	104300	14.0	36	132-160-180-200	—	—	199200	233900	86300	135000
	GTN15 L4	487	1.0	104900	12.7	36	132-160-180-200	—	—	205200	240900	89200	135000
	GTN15 L4	533	0.94	105000	11.6	36	132-160-180-200	—	—	206000	243000	90000	135000
	GTN15 L4	591	0.85	105000	10.5	36	132-160-180-200	—	—	206000	243000	90000	135000
	GTN15 L4	672	0.74	105000	9.2	36	132-160-180-200	—	—	206000	243000	90000	135000
	GTN15 L4	741	0.67	105000	8.4	36	132-160-180-200	—	—	206000	243000	90000	135000
	GTN15 L4	862	0.58	105000	7.2	36	132-160-180-200	—	—	206000	243000	90000	135000
	GTN15 L4	930	0.54	99000	6.3	36	132-160-180-200	—	—	206000	243000	90000	135000
	GTN15 L4	1043	0.48	105000	6.0	36	132-160-180-200	—	—	206000	243000	90000	135000
	GTN15 L4	1104	0.45	99000	5.3	36	132-160-180-200	—	—	206000	243000	90000	135000
	GTN15 L4	1284	0.39	99000	4.6	36	132-160-180-200	—	—	206000	243000	90000	135000
	GTN15 L4	1492	0.34	83500	3.3	36	132-160-180-200	—	—	206000	243000	90000	135000
	GTN15 L4	1805	0.28	83500	2.7	36	132-160-180-200	—	—	206000	243000	90000	135000

GTN16 L — 138820 Nm

n_1 min^{-1}		i	n_2 min^{-1}	M_{n2} Nm	P_{n1} kW	Pt kW	P (IEC)	Rn_2 [N] LK	LS	HK/MK	HS/MS	LSH	$M_{2\,max}$ Nm
1500	GTN16 L2	17.4	86	43900	200	50	—	—	—	90300	100400	33900	192000
	GTN16 L2	22.3	67	48500	200	50	—	—	—	97300	108200	36900	192000
	GTN16 L2	26.5	57	47700	200	50	—	—	—	102500	113900	39100	192000
	GTN16 L3	59.6	25.2	63400	115	35	180-200-225-250	—	—	130700	145300	51200	192000
	GTN16 L3	71.1	21.1	66900	115	35	180-200-225-250	—	—	137800	153300	54300	192000
	GTN16 L3	76.5	19.6	70100	115	35	180-200-225-250	—	—	140800	156600	55600	192000
	GTN16 L3	91.3	16.4	72100	115	35	180-200-225-250	—	—	148500	165200	59000	192000
	GTN16 L3	108	13.8	75900	115	35	180-200-225-250	—	—	156300	173900	62500	192000

B

GTN16 L

138820 Nm

n_1 min^{-1}		i	n_2 min^{-1}	M_{n2} Nm	P_{n1} kW	Pt kW	P (IEC)	Rn_2 [N] LK	LS	HK/MK	HS/MS	LSH	$M_{2\,max}$ Nm
1500	GTN16 L3	117	12.8	79400	115	35	180-200-225-250	—	—	160000	178000	64100	192000
	GTN16 L3	139	10.8	81800	101	35	180-200-225-250	—	—	168500	187400	67900	192000
	GTN16 L3	165	9.1	82500	86	35	180-200-225-250	—	—	177400	197300	71900	192000
	GTN16 L4	215	7.0	93200	60	18.0	132-160-180-200	—	—	191900	213500	78500	192000
	GTN16 L4	256	5.9	98200	60	18.0	132-160-180-200	—	—	202400	225100	83200	192000
	GTN16 L4	302	5.0	103200	60	18.0	132-160-180-200	—	—	212700	236600	87900	192000
	GTN16 L4	329	4.6	105800	57	18.0	132-160-180-200	—	—	218100	242600	90400	192000
	GTN16 L4	370	4.1	109400	53	18.0	132-160-180-200	—	—	225900	251300	94000	192000
	GTN16 L4	441	3.4	115200	46	18.0	132-160-180-200	—	—	238200	264900	99700	192000
	GTN16 L4	487	3.1	118600	43	18.0	132-160-180-200	—	—	245400	272900	103100	192000
	GTN16 L4	533	2.8	121800	40	18.0	132-160-180-200	—	—	252200	280500	106300	192000
	GTN16 L4	566	2.7	123900	39	18.0	132-160-180-200	—	—	256700	285500	108400	192000
	GTN16 L4	591	2.5	122500	37	18.0	132-160-180-200	—	—	260100	289200	110000	192000
	GTN16 L4	625	2.4	126500	36	18.0	132-160-180-200	—	—	264500	294100	112000	192000
	GTN16 L4	685	2.2	127800	33	18.0	132-160-180-200	—	—	271800	302300	115500	192000
	GTN16 L4	726	2.1	128600	31	18.0	132-160-180-200	—	—	276700	307700	117800	192000
	GTN16 L4	741	2.0	126500	30	18.0	132-160-180-200	—	—	278400	309600	118600	192000
	GTN16 L4	812	1.8	130000	28	18.0	132-160-180-200	—	—	286100	318200	122300	192000
	GTN16 L4	862	1.7	129000	27	18.0	132-160-180-200	—	—	291300	323900	124700	192000
	GTN16 L4	1043	1.4	132300	23	18.0	132-160-180-200	—	—	308400	343000	132900	192000
	GTN16 L4	1237	1.2	122100	17.5	18.0	132-160-180-200	—	—	324600	361100	140700	192000
1000	GTN16 L2	17.4	58	49500	200	60	—	—	—	102000	113400	38900	192000
	GTN16 L2	22.3	45	55000	200	60	—	—	—	109900	122200	42200	192000
	GTN16 L2	26.5	38	53800	200	60	—	—	—	115700	128700	44700	192000
	GTN16 L3	59.6	16.8	71600	115	42	180-200-225-250	—	—	147600	164100	58600	192000
	GTN16 L3	71.1	14.1	75600	115	42	180-200-225-250	—	—	155600	173100	62100	192000
	GTN16 L3	76.5	13.1	78900	115	42	180-200-225-250	—	—	159100	176900	63700	192000
	GTN16 L3	91.3	11.0	81400	102	42	180-200-225-250	—	—	167700	186500	67500	192000
	GTN16 L3	108	9.2	85700	91	42	180-200-225-250	—	—	176600	196400	71500	192000
	GTN16 L3	117	8.5	89800	88	42	180-200-225-250	—	—	180800	201000	73400	192000
	GTN16 L3	139	7.2	92400	76	42	180-200-225-250	—	—	190300	211600	77700	192000
	GTN16 L3	165	6.1	93100	65	42	180-200-225-250	—	—	200300	222800	82300	192000
	GTN16 L4	215	4.7	105100	58	22	132-160-180-200	—	—	216700	241100	89800	192000
	GTN16 L4	256	3.9	110700	51	22	132-160-180-200	—	—	228500	254200	95300	192000
	GTN16 L4	302	3.3	116100	45	22	132-160-180-200	—	—	240200	267200	100700	192000
	GTN16 L4	329	3.0	119000	43	22	132-160-180-200	—	—	246300	273900	103500	192000
	GTN16 L4	370	2.7	123100	39	22	132-160-180-200	—	—	255100	283800	107600	192000
	GTN16 L4	441	2.3	127300	34	22	132-160-180-200	—	—	269000	299200	114200	192000
	GTN16 L4	487	2.1	128600	31	22	132-160-180-200	—	—	277100	308200	118000	192000
	GTN16 L4	533	1.9	129900	29	22	132-160-180-200	—	—	284800	316800	121700	192000
	GTN16 L4	566	1.8	130700	27	22	132-160-180-200	—	—	289900	322500	124100	192000
	GTN16 L4	591	1.7	129500	26	22	132-160-180-200	—	—	293700	326600	125900	192000
	GTN16 L4	625	1.6	132100	25	22	132-160-180-200	—	—	298700	332200	128200	192000
	GTN16 L4	685	1.5	133400	23	22	132-160-180-200	—	—	307000	341400	132200	192000
	GTN16 L4	726	1.4	134200	22	22	132-160-180-200	—	—	312500	347500	134800	192000
	GTN16 L4	741	1.3	133400	21	22	132-160-180-200	—	—	314400	349700	135800	192000
	GTN16 L4	812	1.2	135800	19.8	22	132-160-180-200	—	—	323200	359400	140000	192000
	GTN16 L4	862	1.2	136100	18.7	22	132-160-180-200	—	—	328900	365800	142800	192000
	GTN16 L4	1043	0.96	138800	15.7	22	132-160-180-200	—	—	345000	385000	150000	192000
	GTN16 L4	1237	0.81	124000	11.9	22	132-160-180-200	—	—	345000	385000	150000	192000
500	GTN16 L2	17.4	28.8	60900	195	100	—	—	—	125600	139600	49000	192000
	GTN16 L2	22.3	22.4	67400	168	100	—	—	—	135300	150500	53200	192000
	GTN16 L2	26.5	18.9	66200	139	100	—	—	—	142400	158400	56300	192000
	GTN16 L3	59.6	8.4	88200	85	70	180-200-225-250	—	—	181700	202100	73800	192000
	GTN16 L3	71.1	7.0	93000	75	70	180-200-225-250	—	—	191600	213100	78300	192000
	GTN16 L3	76.5	6.5	98000	74	70	180-200-225-250	—	—	195800	217800	80200	192000
	GTN16 L3	91.3	5.5	100200	63	70	180-200-225-250	—	—	206500	229600	85100	192000
	GTN16 L3	108	4.6	105400	56	70	180-200-225-250	—	—	217400	241800	90100	192000
	GTN16 L3	117	4.3	111100	54	70	180-200-225-250	—	—	222500	247500	92500	192000
	GTN16 L3	139	3.6	112100	46	70	180-200-225-250	—	—	234300	260500	97900	192000
	GTN16 L3	165	3.0	110200	38	70	180-200-225-250	—	—	246600	274300	103700	192000

B

GTN16 L — 138820 Nm

n_1 min^{-1}		i	n_2 min^{-1}	M_{n2} Nm	P_{n1} kW	Pt kW	P (IEC)	Rn_2 [N] LK	LS	HK/MK	HS/MS	LSH	$M_{2\,max}$ Nm
500	GTN16 L4	215	2.3	126900	35	36	132-160-180-200	—	—	266800	296800	113100	192000
	GTN16 L4	256	2.0	129300	30	36	132-160-180-200	—	—	281400	312900	120000	192000
	GTN16 L4	302	1.7	131600	26	36	132-160-180-200	—	—	295700	328900	126800	192000
	GTN16 L4	329	1.5	132800	24	36	132-160-180-200	—	—	303200	337200	130400	192000
	GTN16 L4	370	1.4	134500	22	36	132-160-180-200	—	—	314100	349300	135600	192000
	GTN16 L4	441	1.1	137000	18.4	36	132-160-180-200	—	—	331200	368400	143800	192000
	GTN16 L4	487	1.0	138400	16.8	36	132-160-180-200	—	—	341200	379500	148700	192000
	GTN16 L4	533	0.94	138800	15.4	36	132-160-180-200	—	—	345000	385000	150000	192000
	GTN16 L4	566	0.88	138800	14.5	36	132-160-180-200	—	—	345000	385000	150000	192000
	GTN16 L4	591	0.85	138800	13.9	36	132-160-180-200	—	—	345000	385000	150000	192000
	GTN16 L4	625	0.80	138800	13.1	36	132-160-180-200	—	—	345000	385000	150000	192000
	GTN16 L4	685	0.73	138800	12.0	36	132-160-180-200	—	—	345000	385000	150000	192000
	GTN16 L4	726	0.69	138800	11.3	36	132-160-180-200	—	—	345000	385000	150000	192000
	GTN16 L4	741	0.67	138800	11.1	36	132-160-180-200	—	—	345000	385000	150000	192000
	GTN16 L4	812	0.62	138800	10.1	36	132-160-180-200	—	—	345000	385000	150000	192000
	GTN16 L4	862	0.58	138800	9.5	36	132-160-180-200	—	—	345000	385000	150000	192000
	GTN16 L4	1043	0.48	138800	7.9	36	132-160-180-200	—	—	345000	385000	150000	192000
	GTN16 L4	1237	0.40	124000	5.9	36	132-160-180-200	—	—	345000	385000	150000	192000

GTN17 L — 208110 Nm

n_1 min^{-1}		i	n_2 min^{-1}	M_{n2} Nm	P_{n1} kW	Pt kW	P (IEC)	Rn_2 [N] LK	LS	HK/MK	HS/MS	LSH	$M_{2\,max}$ Nm
1500	GTN17 L3	58.1	25.8	90300	150	35	180-200-225-250	—	—	166800	177500	50800	393000
	GTN17 L3	69.3	21.6	93300	150	35	180-200-225-250	—	—	175800	187200	53800	393000
	GTN17 L3	89.0	16.9	101000	150	35	180-200-225-250	—	—	189500	201800	58500	393000
	GTN17 L3	106	14.2	105800	150	35	180-200-225-250	—	—	199500	212400	61900	393000
	GTN17 L3	116	12.9	108300	150	35	180-200-225-250	—	—	205200	218400	63900	393000
	GTN17 L3	138	10.9	114000	143	35	180-200-225-250	—	—	216000	230000	67700	393000
	GTN17 L3	166	9.1	120500	125	35	180-200-225-250	—	—	228300	243100	72000	393000
	GTN17 L3	179	8.4	136600	131	35	180-200-225-250	—	—	233800	248900	73900	393000
	GTN17 L3	213	7.1	142200	115	35	180-200-225-250	—	—	246100	262000	78200	393000
	GTN17 L3	252	5.9	119700	82	35	180-200-225-250	—	—	259100	275800	82800	393000
	GTN17 L4	310	4.8	146200	60	18.0	132-160-180-200	—	—	275500	293400	88700	393000
	GTN17 L4	360	4.2	152900	60	18.0	132-160-180-200	—	—	288300	306900	93200	393000
	GTN17 L4	449	3.3	163300	60	18.0	132-160-180-200	—	—	307900	327800	100300	393000
	GTN17 L4	493	3.0	166900	60	18.0	132-160-180-200	—	—	316700	337200	103500	393000
	GTN17 L4	552	2.7	174500	56	18.0	132-160-180-200	—	—	327600	348800	107500	393000
	GTN17 L4	619	2.4	177200	51	18.0	132-160-180-200	—	—	339000	361000	111600	393000
	GTN17 L4	719	2.1	178400	44	18.0	132-160-180-200	—	—	354700	377600	117400	393000
	GTN17 L4	792	1.9	186500	42	18.0	132-160-180-200	—	—	365100	388700	121200	393000
	GTN17 L4	904	1.7	166600	33	18.0	132-160-180-200	—	—	379800	404400	126700	393000
	GTN17 L4	1032	1.5	181300	31	18.0	132-160-180-200	—	—	395300	420900	132400	393000
	GTN17 L4	1134	1.3	168100	26	18.0	132-160-180-200	—	—	406600	432900	136600	393000
	GTN17 L4	1318	1.1	169100	23	18.0	132-160-180-200	—	—	425400	452900	143700	393000
	GTN17 L4	1595	0.94	170000	18.9	18.0	132-160-180-200	—	—	442000	470000	150000	393000
	GTN17 L4	1893	0.79	156200	14.6	18.0	132-160-180-200	—	—	442000	470000	150000	393000
1000	GTN17 L3	58.1	17.2	101900	150	42	180-200-225-250	—	—	188300	200500	58100	393000
	GTN17 L3	69.3	14.4	105300	150	42	180-200-225-250	—	—	198600	211400	61600	393000
	GTN17 L3	89.0	11.2	114000	147	42	180-200-225-250	—	—	214000	227800	67000	393000
	GTN17 L3	106	9.5	119500	130	42	180-200-225-250	—	—	225300	239900	70900	393000
	GTN17 L3	116	8.6	122300	121	42	180-200-225-250	—	—	231700	246700	73200	393000
	GTN17 L3	138	7.3	128800	107	42	180-200-225-250	—	—	243900	259700	77400	393000
	GTN17 L3	166	6.0	136100	94	42	180-200-225-250	—	—	257900	274600	82400	393000
	GTN17 L3	179	5.6	150100	96	42	180-200-225-250	—	—	264000	281100	84600	393000
	GTN17 L3	213	4.7	154900	84	42	180-200-225-250	—	—	277900	295900	89500	393000
	GTN17 L3	252	4.0	124600	57	42	180-200-225-250	—	—	292600	311500	94800	393000
	GTN17 L4	310	3.2	165100	60	22	132-160-180-200	—	—	311200	331300	101500	393000
	GTN17 L4	360	2.8	172700	57	22	132-160-180-200	—	—	325600	346600	106700	393000
	GTN17 L4	449	2.2	181600	48	22	132-160-180-200	—	—	347700	370200	114800	393000

B

GTN17 L — 208110 Nm

n_1 min^{-1}		i	n_2 min^{-1}	M_{n2} Nm	P_{n1} kW	Pt kW	P (IEC)	Rn_2 [N] LK	LS	HK/MK	HS/MS	LSH	$M_{2\,max}$ Nm
1000	GTN17 L4	493	2.0	178600	43	22	132-160-180-200	—	—	357700	380800	118500	393000
	GTN17 L4	552	1.8	188400	40	22	132-160-180-200	—	—	369900	393900	123000	393000
	GTN17 L4	619	1.6	180400	35	22	132-160-180-200	—	—	382900	407600	127800	393000
	GTN17 L4	719	1.4	181600	30	22	132-160-180-200	—	—	400600	426500	134400	393000
	GTN17 L4	792	1.3	199300	30	22	132-160-180-200	—	—	412300	439000	138800	393000
	GTN17 L4	904	1.1	169300	22	22	132-160-180-200	—	—	429000	456700	145000	393000
	GTN17 L4	1032	0.97	184300	21	22	132-160-180-200	—	—	442000	470000	150000	393000
	GTN17 L4	1134	0.88	170000	17.7	22	132-160-180-200	—	—	442000	470000	150000	393000
	GTN17 L4	1318	0.76	170000	15.3	22	132-160-180-200	—	—	442000	470000	150000	393000
	GTN17 L4	1595	0.63	170000	12.6	22	132-160-180-200	—	—	442000	470000	150000	393000
	GTN17 L4	1893	0.53	156200	9.8	22	132-160-180-200	—	—	442000	470000	150000	393000
500	GTN17 L2	16.9	29.5	86700	250	116	—	—	—	160200	170600	48500	393000
	GTN17 L2	22.1	22.6	91400	230	116	—	—	—	173500	184700	53000	393000
	GTN17 L2	26.6	18.8	96700	202	116	—	—	—	183400	195300	56400	393000
	GTN17 L2	28.4	17.6	110500	217	116	—	—	—	186900	199000	57600	393000
	GTN17 L2	34.1	14.7	116800	191	116	—	—	—	197600	210400	61300	393000
	GTN17 L2	40.5	12.3	112800	155	116	—	—	—	208100	221500	64900	393000
	GTN17 L3	58.1	8.6	125400	124	70	180-200-225-250	—	—	231900	246900	73200	393000
	GTN17 L3	69.3	7.2	129700	107	70	180-200-225-250	—	—	244500	260300	77600	393000
	GTN17 L3	89.0	5.6	140100	90	70	180-200-225-250	—	—	263500	280500	84400	393000
	GTN17 L3	106	4.7	147100	80	70	180-200-225-250	—	—	277400	295300	89300	393000
	GTN17 L3	116	4.3	150500	74	70	180-200-225-250	—	—	285300	303700	92200	393000
	GTN17 L3	138	3.6	158400	66	70	180-200-225-250	—	—	300300	319700	97600	393000
	GTN17 L3	166	3.0	151900	53	70	180-200-225-250	—	—	317500	338000	103800	393000
	GTN17 L3	179	2.8	162300	52	70	180-200-225-250	—	—	325000	346100	106500	393000
	GTN17 L3	213	2.4	164400	44	70	180-200-225-250	—	—	342200	364300	112800	393000
	GTN17 L3	252	2.0	139600	32	70	180-200-225-250	—	—	360200	383500	119400	393000
	GTN17 L4	310	1.6	191500	37	36	132-160-180-200	—	—	383100	407900	127900	393000
	GTN17 L4	360	1.4	196200	32	36	132-160-180-200	—	—	400800	426700	134500	393000
	GTN17 L4	449	1.1	203400	27	36	132-160-180-200	—	—	428100	455800	144700	393000
	GTN17 L4	493	1.0	184200	22	36	132-160-180-200	—	—	440300	468800	149300	393000
	GTN17 L4	552	0.91	207100	22	36	132-160-180-200	—	—	442000	470000	150000	393000
	GTN17 L4	619	0.81	184300	17.6	36	132-160-180-200	—	—	442000	470000	150000	393000
	GTN17 L4	719	0.70	184300	15.2	36	132-160-180-200	—	—	442000	470000	150000	393000
	GTN17 L4	792	0.63	207100	15.5	36	132-160-180-200	—	—	442000	470000	150000	393000
	GTN17 L4	904	0.55	170000	11.1	36	132-160-180-200	—	—	442000	470000	150000	393000
	GTN17 L4	1032	0.48	184300	10.6	36	132-160-180-200	—	—	442000	470000	150000	393000
	GTN17 L4	1134	0.44	170000	8.9	36	132-160-180-200	—	—	442000	470000	150000	393000
	GTN17 L4	1318	0.38	170000	7.6	36	132-160-180-200	—	—	442000	470000	150000	393000
	GTN17 L4	1595	0.31	170000	6.3	36	132-160-180-200	—	—	442000	470000	150000	393000
	GTN17 L4	1893	0.26	156200	4.9	36	132-160-180-200	—	—	442000	470000	150000	393000

GTN18 L — 280580 Nm

n_1 min^{-1}		i	n_2 min^{-1}	M_{n2} Nm	P_{n1} kW	Pt kW	P (IEC)	Rn_2 [N] LK	LS	HK/MK	HS/MS	LSH	$M_{2\,max}$ Nm
1500	GTN18 L3	76.5	19.6	144900	200	40	—	—	—	227200	231900	74200	550000
	GTN18 L3	98.2	15.3	156100	200	40	—	—	—	244900	249900	80600	550000
	GTN18 L3	117	12.9	164400	200	40	—	—	—	257800	263100	85300	550000
	GTN18 L3	123	12.2	167200	200	40	—	—	—	262100	267500	86900	550000
	GTN18 L3	146	10.3	176000	200	40	—	—	—	275900	281600	92000	550000
	GTN18 L3	170	8.8	184100	186	40	—	—	—	288700	294600	96800	550000
	GTN18 L4	262	5.7	209700	115	22	180-200-225-250	—	—	328800	335600	111800	550000
	GTN18 L4	313	4.8	220800	115	22	180-200-225-250	—	—	346700	353800	118600	550000
	GTN18 L4	337	4.5	225200	115	22	180-200-225-250	—	—	354400	361600	121500	550000
	GTN18 L4	402	3.7	236100	104	22	180-200-225-250	—	—	373600	381300	128900	550000
	GTN18 L4	422	3.6	239300	101	22	180-200-225-250	—	—	379300	387100	131100	550000
	GTN18 L4	477	3.1	247200	92	22	180-200-225-250	—	—	393300	401400	136500	550000
	GTN18 L4	515	2.9	252500	87	22	180-200-225-250	—	—	402700	410900	140100	550000

B

GTN18 L — 280580 Nm

n_1 min^{-1}		i	n_2 min^{-1}	M_{n2} Nm	P_{n1} kW	Pt kW	P (IEC)	Rn_2 [N] LK	LS	HK/MK	HS/MS	LSH	$M_{2\,max}$ Nm
1500	**GTN18 L4**	**612**	2.5	263300	76	22	180-200-225-250	—	—	423900	432600	148300	550000
	GTN18 L4	**647**	2.3	264400	73	22	180-200-225-250	—	—	431100	439900	151100	550000
	GTN18 L4	**726**	2.1	266600	65	22	180-200-225-250	—	—	446300	455400	157000	550000
	GTN18 L4	**768**	2.0	267600	62	22	180-200-225-250	—	—	453800	463100	160000	550000
	GTN18 L4	**911**	1.6	270900	53	22	180-200-225-250	—	—	477700	487500	169400	550000
	GTN18 L4	**1059**	1.4	273800	46	22	180-200-225-250	—	—	499800	510000	178100	550000
1000	**GTN18 L3**	**76.5**	13.1	163600	200	48	—	—	—	256600	261900	84900	550000
	GTN18 L3	**98.2**	10.2	176300	200	48	—	—	—	276500	282200	92300	550000
	GTN18 L3	**117**	8.6	185600	183	48	—	—	—	291100	297100	97700	550000
	GTN18 L3	**123**	8.1	188800	176	48	—	—	—	296000	302100	99500	550000
	GTN18 L3	**146**	6.8	198700	156	48	—	—	—	311600	318000	105400	550000
	GTN18 L3	**170**	5.9	207900	140	48	—	—	—	326000	332700	110800	550000
	GTN18 L4	**262**	3.8	234800	106	26	180-200-225-250	—	—	371300	379000	128000	550000
	GTN18 L4	**313**	3.2	246200	93	26	180-200-225-250	—	—	391500	399600	135800	550000
	GTN18 L4	**337**	3.0	251100	88	26	180-200-225-250	—	—	400200	408400	139100	550000
	GTN18 L4	**402**	2.5	263100	77	26	180-200-225-250	—	—	422000	430600	147600	550000
	GTN18 L4	**422**	2.4	264000	74	26	180-200-225-250	—	—	428400	437200	150100	550000
	GTN18 L4	**477**	2.1	266300	66	26	180-200-225-250	—	—	444200	453300	156200	550000
	GTN18 L4	**515**	1.9	267700	61	26	180-200-225-250	—	—	454800	464100	160400	550000
	GTN18 L4	**612**	1.6	271000	52	26	180-200-225-250	—	—	478700	488600	169800	550000
	GTN18 L4	**647**	1.5	272100	50	26	180-200-225-250	—	—	486800	496800	173000	550000
	GTN18 L4	**726**	1.4	274300	45	26	180-200-225-250	—	—	503000	514300	179800	550000
	GTN18 L4	**768**	1.3	275400	42	26	180-200-225-250	—	—	503000	523000	183100	550000
	GTN18 L4	**911**	1.1	278700	36	26	180-200-225-250	—	—	503000	550600	193900	550000
	GTN18 L4	**1059**	0.94	280600	31	26	180-200-225-250	—	—	503000	565000	200000	550000
500	**GTN18 L2**	**18.7**	26.7	132000	260	63	—	—	—	207000	211300	66900	550000
	GTN18 L2	**23.5**	21.3	141300	260	63	—	—	—	221600	226200	72100	550000
	GTN18 L2	**27.3**	18.3	147800	260	63	—	—	—	231800	236600	75900	550000
	GTN18 L3	**76.5**	6.5	201500	151	80	—	—	—	315900	322400	107000	550000
	GTN18 L3	**98.2**	5.1	217100	127	80	—	—	—	340400	347400	116200	550000
	GTN18 L3	**117**	4.3	227500	112	80	—	—	—	358400	365700	123100	550000
	GTN18 L3	**123**	4.1	230900	108	80	—	—	—	364400	371900	125400	550000
	GTN18 L3	**146**	3.4	241800	95	80	—	—	—	383700	391500	132800	550000
	GTN18 L3	**170**	2.9	251700	85	80	—	—	—	401400	409600	139600	550000
	GTN18 L4	**262**	1.9	268100	60	44	180-200-225-250	—	—	457200	466600	161300	550000
	GTN18 L4	**313**	1.6	271400	51	44	180-200-225-250	—	—	482000	491900	171100	550000
	GTN18 L4	**337**	1.5	272800	48	44	180-200-225-250	—	—	492700	502800	175300	550000
	GTN18 L4	**402**	1.2	276300	41	44	180-200-225-250	—	—	503000	530200	185900	550000
	GTN18 L4	**422**	1.2	277300	39	44	180-200-225-250	—	—	503000	538200	189100	550000
	GTN18 L4	**477**	1.0	279600	35	44	180-200-225-250	—	—	503000	558100	196800	550000
	GTN18 L4	**515**	0.97	280600	32	44	180-200-225-250	—	—	503000	565000	200000	550000
	GTN18 L4	**612**	0.82	280600	27	44	180-200-225-250	—	—	503000	565000	200000	550000
	GTN18 L4	**647**	0.77	280600	26	44	180-200-225-250	—	—	503000	565000	200000	550000
	GTN18 L4	**726**	0.69	280600	23	44	180-200-225-250	—	—	503000	565000	200000	550000
	GTN18 L4	**768**	0.65	280600	22	44	180-200-225-250	—	—	503000	565000	200000	550000
	GTN18 L4	**911**	0.55	280600	18.2	44	180-200-225-250	—	—	503000	565000	200000	550000
	GTN18 L4	**1059**	0.47	280600	15.7	44	180-200-225-250	—	—	503000	565000	200000	550000

GTN19 L — 476410 Nm

n_1 min^{-1}		i	n_2 min^{-1}	M_{n2} Nm	P_{n1} kW	Pt kW	P (IEC)	Rn_2 [N] LK	LS	HK/MK	HS/MS	LSH	$M_{2\,max}$ Nm
1500	**GTN19 L3**	**84.8**	17.7	195400	200	50	—	—	—	269300	296700	76700	680000
	GTN19 L3	**109**	13.8	222400	200	50	—	—	—	290200	319800	83400	680000
	GTN19 L3	**129**	11.6	220800	200	50	—	—	—	305500	336600	88300	680000
	GTN19 L3	**137**	11.0	226500	200	50	—	—	—	310700	342300	90000	680000
	GTN19 L3	**162**	9.3	250300	200	50	—	—	—	326800	360000	95200	680000
	GTN19 L3	**188**	8.0	209800	192	50	—	—	—	342200	377000	100100	680000

B

GTN19 L

476410 Nm

n_1 min^{-1}		i	n_2 min^{-1}	M_{n2} Nm	P_{n1} kW	Pt kW	P (IEC)	Rn_2 [N] LK	LS	HK/MK	HS/MS	LSH	$M_{2\,max}$ Nm
1500	GTN19 L3	223	6.7	246100	190	50	—	—	—	359900	396500	105900	680000
	GTN19 L4	347	4.3	298000	115	30	180-200-225-250	—	—	410900	452700	122700	680000
	GTN19 L4	445	3.4	319800	115	30	180-200-225-250	—	—	442900	487900	133400	680000
	GTN19 L4	528	2.8	335700	113	30	180-200-225-250	—	—	466200	513700	141200	680000
	GTN19 L4	571	2.6	344400	107	30	180-200-225-250	—	—	477300	525800	145000	680000
	GTN19 L4	678	2.2	354900	93	30	180-200-225-250	—	—	502400	553600	153500	680000
	GTN19 L4	717	2.1	355800	88	30	180-200-225-250	—	—	510900	562900	156300	680000
	GTN19 L4	850	1.8	363400	76	30	180-200-225-250	—	—	537900	592600	165500	680000
	GTN19 L4	912	1.6	336100	65	30	180-200-225-250	—	—	549200	605100	169400	680000
	GTN19 L4	1007	1.5	344900	61	30	180-200-225-250	—	—	565700	623300	175100	680000
	GTN19 L4	1195	1.3	354500	53	30	180-200-225-250	—	—	595600	656200	185400	680000
	GTN19 L4	1389	1.1	355900	45	30	180-200-225-250	—	—	623100	686500	194900	680000
1000	GTN19 L3	84.8	11.8	220700	200	60	—	—	—	304100	335100	87900	680000
	GTN19 L3	109	9.2	251200	200	60	—	—	—	327800	361100	95500	680000
	GTN19 L3	129	7.7	249300	200	60	—	—	—	345000	380100	101100	680000
	GTN19 L3	137	7.3	255500	200	60	—	—	—	350900	386600	103000	680000
	GTN19 L3	162	6.2	263500	187	60	—	—	—	369000	406600	108900	680000
	GTN19 L3	188	5.3	236700	144	60	—	—	—	386400	425800	114600	680000
	GTN19 L3	223	4.5	274900	141	60	—	—	—	406500	447800	121300	680000
	GTN19 L4	347	2.9	334200	114	36	180-200-225-250	—	—	464100	511300	140500	680000
	GTN19 L4	445	2.2	354100	94	36	180-200-225-250	—	—	500200	551000	152700	680000
	GTN19 L4	528	1.9	364000	82	36	180-200-225-250	—	—	526500	580100	161700	680000
	GTN19 L4	571	1.8	368700	76	36	180-200-225-250	—	—	539000	593900	165900	680000
	GTN19 L4	678	1.5	379100	66	36	180-200-225-250	—	—	567400	625200	175700	680000
	GTN19 L4	717	1.4	374100	62	36	180-200-225-250	—	—	577000	635700	179000	680000
	GTN19 L4	850	1.2	382200	53	36	180-200-225-250	—	—	607400	669200	189500	680000
	GTN19 L4	912	1.1	355200	46	36	180-200-225-250	—	—	620200	683400	193900	680000
	GTN19 L4	1007	0.99	367600	43	36	180-200-225-250	—	—	638000	702000	200000	680000
	GTN19 L4	1195	0.84	367600	36	36	180-200-225-250	—	—	638000	702000	200000	680000
	GTN19 L4	1389	0.72	359700	31	36	180-200-225-250	—	—	638000	702000	200000	680000
500	GTN19 L2	20.7	24.1	191800	260	70	—	—	—	245400	270300	69200	680000
	GTN19 L2	24.5	20.4	200300	260	70	—	—	—	258100	284300	73200	680000
	GTN19 L2	26.0	19.2	191600	260	70	—	—	—	262700	289400	74700	680000
	GTN19 L2	30.2	16.5	168600	260	70	—	—	—	274800	302800	78500	680000
	GTN19 L2	35.8	14.0	199000	260	70	—	—	—	289000	318500	83000	680000
	GTN19 L3	84.8	5.9	272100	184	100	—	—	—	374400	412500	110700	680000
	GTN19 L3	109	4.6	306300	162	100	—	—	—	403500	444600	120300	680000
	GTN19 L3	129	3.9	306100	136	100	—	—	—	424800	468000	127400	680000
	GTN19 L3	137	3.7	312300	131	100	—	—	—	432000	475900	129700	680000
	GTN19 L3	162	3.1	302300	107	100	—	—	—	454400	500600	137200	680000
	GTN19 L3	188	2.7	290800	89	100	—	—	—	475800	524200	144400	680000
	GTN19 L3	223	2.2	322300	83	100	—	—	—	500400	551300	152800	680000
	GTN19 L4	347	1.4	380500	65	60	180-200-225-250	—	—	571400	629500	177000	680000
	GTN19 L4	445	1.1	396200	53	60	180-200-225-250	—	—	615800	678400	192400	680000
	GTN19 L4	528	0.95	403700	45	60	180-200-225-250	—	—	638000	702000	200000	680000
	GTN19 L4	571	0.88	403700	42	60	180-200-225-250	—	—	638000	702000	200000	680000
	GTN19 L4	678	0.74	403700	35	60	180-200-225-250	—	—	638000	702000	200000	680000
	GTN19 L4	717	0.70	389900	32	60	180-200-225-250	—	—	638000	702000	200000	680000
	GTN19 L4	850	0.59	389900	27	60	180-200-225-250	—	—	638000	702000	200000	680000
	GTN19 L4	912	0.55	359700	23	60	180-200-225-250	—	—	638000	702000	200000	680000
	GTN19 L4	1007	0.50	367600	22	60	180-200-225-250	—	—	638000	702000	200000	680000
	GTN19 L4	1195	0.42	367600	18.2	60	180-200-225-250	—	—	638000	702000	200000	680000
	GTN19 L4	1389	0.36	359700	15.3	60	180-200-225-250	—	—	638000	702000	200000	680000

B

GTN21 L — 655740 Nm

n_1 min^{-1}		i	n_2 min^{-1}	M_{n2} Nm	P_{n1} kW	Pt kW	P (IEC)	Rn_2 [N] LK	LS	HK/MK	HS/MS	LSH	$M_{2\,max}$ Nm
1500	GTN21 L4	258	5.8	401700	150	35	180-200-225-250	—	—	461500	547200	667600	934000
	GTN21 L4	308	4.9	423600	150	35	180-200-225-250	—	—	486600	577000	708100	934000
	GTN21 L4	395	3.8	456500	150	35	180-200-225-250	—	—	524400	621900	769500	934000
	GTN21 L4	469	3.2	480500	150	35	180-200-225-250	—	—	552000	654600	814700	934000
	GTN21 L4	515	2.9	494200	150	35	180-200-225-250	—	—	567800	673300	840500	934000
	GTN21 L4	612	2.5	519900	150	35	180-200-225-250	—	—	597700	708800	889900	934000
	GTN21 L4	736	2.0	545400	131	35	180-200-225-250	—	—	631900	749400	946600	934000
	GTN21 L4	796	1.9	556600	124	35	180-200-225-250	—	—	646900	767100	971600	934000
	GTN21 L4	945	1.6	581800	109	35	180-200-225-250	—	—	681000	807600	1028700	934000
	GTN21 L4	1122	1.3	530200	84	35	180-200-225-250	—	—	716900	850200	1089200	934000
1000	GTN21 L3	75.3	13.3	313500	250	60	—	—	—	360100	427000	506800	934000
	GTN21 L3	98.2	10.2	339400	250	60	—	—	—	389900	462400	553600	934000
	GTN21 L3	118	8.5	358800	250	60	—	—	—	412200	488800	588900	934000
	GTN21 L3	126	7.9	365800	250	60	—	—	—	420200	498300	601600	934000
	GTN21 L3	152	6.6	386700	250	60	—	—	—	444200	526800	639900	934000
	GTN21 L3	180	5.6	407100	250	60	—	—	—	467700	554600	677500	934000
	GTN21 L4	258	3.9	453700	150	42	180-200-225-250	—	—	521200	618000	764200	934000
	GTN21 L4	308	3.2	478300	150	42	180-200-225-250	—	—	549500	651700	810500	934000
	GTN21 L4	395	2.5	515500	150	42	180-200-225-250	—	—	592200	702300	880800	934000
	GTN21 L4	469	2.1	539100	136	42	180-200-225-250	—	—	623400	739300	932600	934000
	GTN21 L4	515	1.9	552400	127	42	180-200-225-250	—	—	641200	760400	962200	934000
	GTN21 L4	612	1.6	577400	112	42	180-200-225-250	—	—	675000	800500	1018700	934000
	GTN21 L4	736	1.4	605800	97	42	180-200-225-250	—	—	713600	846300	1083600	934000
	GTN21 L4	796	1.3	618200	92	42	180-200-225-250	—	—	730600	866400	1112200	934000
	GTN21 L4	945	1.1	646200	81	42	180-200-225-250	—	—	769100	912000	1177600	934000
	GTN21 L4	1122	0.89	536400	57	42	180-200-225-250	—	—	779000	923000	1200000	934000
500	GTN21 L3	75.3	6.6	385900	250	127	—	—	—	443300	525700	638500	934000
	GTN21 L3	98.2	5.1	417900	244	127	—	—	—	480000	569300	697500	934000
	GTN21 L3	118	4.2	441800	214	127	—	—	—	507500	601800	742000	934000
	GTN21 L3	126	4.0	450300	205	127	—	—	—	517300	613500	758000	934000
	GTN21 L3	152	3.3	476100	180	127	—	—	—	546900	648600	806300	934000
	GTN21 L3	180	2.8	501200	160	127	—	—	—	575800	682800	853700	934000
	GTN21 L4	258	1.9	552700	127	70	180-200-225-250	—	—	641600	760900	962800	934000
	GTN21 L4	308	1.6	578500	111	70	180-200-225-250	—	—	676500	802300	1021200	934000
	GTN21 L4	395	1.3	617100	92	70	180-200-225-250	—	—	729100	864600	1109700	934000
	GTN21 L4	469	1.1	645100	81	70	180-200-225-250	—	—	767500	910200	1174900	934000
	GTN21 L4	515	0.97	655700	75	70	180-200-225-250	—	—	779000	923000	1200000	934000
	GTN21 L4	612	0.82	655700	63	70	180-200-225-250	—	—	779000	923000	1200000	934000
	GTN21 L4	736	0.68	655700	53	70	180-200-225-250	—	—	779000	923000	1200000	934000
	GTN21 L4	796	0.63	655700	49	70	180-200-225-250	—	—	779000	923000	1200000	934000
	GTN21 L4	945	0.53	655700	41	70	180-200-225-250	—	—	779000	923000	1200000	934000
	GTN21 L4	1122	0.45	536400	28	70	180-200-225-250	—	—	779000	923000	1200000	934000

GTN23 L — 890310 Nm

n_1 min^{-1}		i	n_2 min^{-1}	M_{n2} Nm	P_{n1} kW	Pt kW	P (IEC)	Rn_2 [N] LK	LS	HK/MK	HS/MS	LSH	$M_{2\,max}$ Nm
1500	GTN23 L4	341	4.4	757500	200	50	—	—	—	—	—	671300	1580000
	GTN23 L4	390	3.8	774100	200	50	—	—	—	—	—	702000	1580000
	GTN23 L4	438	3.4	788700	200	50	—	—	—	—	—	729500	1580000
	GTN23 L4	500	3.0	806000	200	50	—	—	—	—	—	762900	1580000
	GTN23 L4	569	2.6	822800	200	50	—	—	—	—	—	796200	1580000
	GTN23 L4	628	2.4	832800	200	50	—	—	—	—	—	822900	1580000
	GTN23 L4	703	2.1	840100	200	50	—	—	—	—	—	854300	1580000
	GTN23 L4	758	2.0	844900	198	50	—	—	—	—	—	876000	1580000
	GTN23 L4	882	1.7	854800	172	50	—	—	—	—	—	921500	1580000
	GTN23 L4	1025	1.5	864700	150	50	—	—	—	—	—	968900	1580000
	GTN23 L4	1101	1.4	869400	140	50	—	—	—	—	—	992100	1580000
	GTN23 L4	1279	1.2	879500	122	50	—	—	—	—	—	1043200	1580000

B

GTN23 L — 890310 Nm

n_1 min^{-1}		i	n_2 min^{-1}	M_{n2} Nm	P_{n1} kW	Pt kW	P (IEC)	Rn_2 [N] LK	LS	HK/MK	HS/MS	LSH	$M_{2\,max}$ Nm
1000	GTN23 L4	341	2.9	808800	200	60	—	—	—	—	—	768500	1580000
	GTN23 L4	390	2.6	826500	200	60	—	—	—	—	—	803600	1580000
	GTN23 L4	438	2.3	835700	200	60	—	—	—	—	—	835100	1580000
	GTN23 L4	500	2.0	844300	200	60	—	—	—	—	—	873300	1580000
	GTN23 L4	569	1.8	852600	177	60	—	—	—	—	—	911400	1580000
	GTN23 L4	628	1.6	859100	162	60	—	—	—	—	—	941900	1580000
	GTN23 L4	703	1.4	866600	146	60	—	—	—	—	—	978000	1580000
	GTN23 L4	758	1.3	871600	136	60	—	—	—	—	—	1002800	1580000
	GTN23 L4	882	1.1	881800	118	60	—	—	—	—	—	1054900	1580000
	GTN23 L4	1025	0.98	890300	103	60	—	—	—	—	—	1100000	1580000
	GTN23 L4	1101	0.91	890300	96	60	—	—	—	—	—	1100000	1580000
	GTN23 L4	1279	0.78	890300	82	60	—	—	—	—	—	1100000	1580000
500	GTN23 L3	83.3	6.0	702600	260	90	—	—	—	—	—	605400	1580000
	GTN23 L3	105	4.8	747400	260	90	—	—	—	—	—	653000	1580000
	GTN23 L3	113	4.4	756600	260	90	—	—	—	—	—	669600	1580000
	GTN23 L3	120	4.2	763800	260	90	—	—	—	—	—	682800	1580000
	GTN23 L3	142	3.5	784900	260	90	—	—	—	—	—	722300	1580000
	GTN23 L3	165	3.0	804200	260	90	—	—	—	—	—	759400	1580000
	GTN23 L3	205	2.4	831600	232	90	—	—	—	—	—	817600	1580000
	GTN23 L4	390	1.3	873500	132	100	—	—	—	—	—	1012500	1580000
	GTN23 L4	341	1.5	864600	150	100	—	—	—	—	—	968200	1580000
	GTN23 L4	390	1.3	873500	132	100	—	—	—	—	—	1012500	1580000
	GTN23 L4	438	1.1	881300	119	100	—	—	—	—	—	1052200	1580000
	GTN23 L4	500	1.00	890300	105	100	—	—	—	—	—	1100000	1580000
	GTN23 L4	569	0.88	890300	93	100	—	—	—	—	—	1100000	1580000
	GTN23 L4	628	0.80	890300	84	100	—	—	—	—	—	1100000	1580000
	GTN23 L4	703	0.71	890300	75	100	—	—	—	—	—	1100000	1580000
	GTN23 L4	758	0.66	890300	70	100	—	—	—	—	—	1100000	1580000
	GTN23 L4	882	0.57	890300	60	100	—	—	—	—	—	1100000	1580000
	GTN23 L4	1025	0.49	890300	51	100	—	—	—	—	—	1100000	1580000
	GTN23 L4	1101	0.45	890300	48	100	—	—	—	—	—	1100000	1580000
	GTN23 L4	1279	0.39	890300	41	100	—	—	—	—	—	1100000	1580000

GTN25 L — 1286700 Nm

n_1 min^{-1}		i	n_2 min^{-1}	M_{n2} Nm	P_{n1} kW	Pt kW	P (IEC)	Rn_2 [N] LK	LS	HK/MK	HS/MS	LSH	$M_{2\,max}$ Nm
1500	GTN25 L4	341	4.4	931900	200	65	—	—	—	—	—	854400	2000000
	GTN25 L4	390	3.8	952300	200	65	—	—	—	—	—	893500	2000000
	GTN25 L4	438	3.4	1004300	200	65	—	—	—	—	—	928500	2000000
	GTN25 L4	500	3.0	1026300	200	65	—	—	—	—	—	970900	2000000
	GTN25 L4	569	2.6	1066500	200	65	—	—	—	—	—	1013300	2000000
	GTN25 L4	628	2.4	1093000	200	65	—	—	—	—	—	1047300	2000000
	GTN25 L4	703	2.1	1101500	200	65	—	—	—	—	—	1087300	2000000
	GTN25 L4	758	2.0	1147900	200	65	—	—	—	—	—	1114900	2000000
	GTN25 L4	882	1.7	1154000	200	65	—	—	—	—	—	1172800	2000000
	GTN25 L4	1025	1.5	1190200	200	65	—	—	—	—	—	1233200	2000000
	GTN25 L4	1101	1.4	963200	155	65	—	—	—	—	—	1262700	2000000
	GTN25 L4	1279	1.2	963200	134	65	—	—	—	—	—	1327700	2000000
1000	GTN25 L4	341	2.9	1052400	200	78	—	—	—	—	—	978000	2000000
	GTN25 L4	390	2.6	1075400	200	78	—	—	—	—	—	1022800	2000000
	GTN25 L4	438	2.3	1120700	200	78	—	—	—	—	—	1062900	2000000
	GTN25 L4	500	2.0	1130200	200	78	—	—	—	—	—	1111400	2000000
	GTN25 L4	569	1.8	1157600	200	78	—	—	—	—	—	1160000	2000000
	GTN25 L4	628	1.6	1179300	200	78	—	—	—	—	—	1198800	2000000
	GTN25 L4	703	1.4	1197000	200	78	—	—	—	—	—	1244700	2000000
	GTN25 L4	758	1.3	1228300	192	78	—	—	—	—	—	1276200	2000000
	GTN25 L4	882	1.1	1254000	168	78	—	—	—	—	—	1342600	2000000
	GTN25 L4	1025	0.98	1286700	148	78	—	—	—	—	—	1400000	2000000
	GTN25 L4	1101	0.91	963200	104	78	—	—	—	—	—	1400000	2000000

B

GTN25 L

1286700 Nm

n_1 min^{-1}		i	n_2 min^{-1}	M_{n2} Nm	P_{n1} kW	Pt kW	P (IEC) -	Rn_2 [N] LK	LS	HK/MK	HS/MS	LSH	$M_{2\,max}$ Nm
1000	**GTN25 L4**	**1279**	0.78	963200	89	78	—	—	—	—	—	1400000	2000000
500	**GTN25 L3**	**83.3**	6.0	849100	260	115	—	—	—	—	—	770500	2000000
	GTN25 L3	**105**	4.8	908900	260	115	—	—	—	—	—	831100	2000000
	GTN25 L3	**113**	4.4	898100	260	115	—	—	—	—	—	852200	2000000
	GTN25 L3	**120**	4.2	928800	260	115	—	—	—	—	—	869100	2000000
	GTN25 L3	**142**	3.5	961400	260	115	—	—	—	—	—	919200	2000000
	GTN25 L3	**165**	3.0	1005800	260	115	—	—	—	—	—	966600	2000000
	GTN25 L3	**205**	2.4	963200	260	115	—	—	—	—	—	1040600	2000000
	GTN25 L4	**390**	1.3	1228100	186	130	—	—	—	—	—	1288600	2000000
	GTN25 L4	**341**	1.5	1206900	200	130	—	—	—	—	—	1232300	2000000
	GTN25 L4	**390**	1.3	1228100	186	130	—	—	—	—	—	1288600	2000000
	GTN25 L4	**438**	1.1	1258300	170	130	—	—	—	—	—	1339100	2000000
	GTN25 L4	**500**	1.00	1286700	152	130	—	—	—	—	—	1400000	2000000
	GTN25 L4	**569**	0.88	1286700	134	130	—	—	—	—	—	1400000	2000000
	GTN25 L4	**628**	0.80	1286700	121	130	—	—	—	—	—	1400000	2000000
	GTN25 L4	**703**	0.71	1286700	108	130	—	—	—	—	—	1400000	2000000
	GTN25 L4	**758**	0.66	1286600	100	130	—	—	—	—	—	1400000	2000000
	GTN25 L4	**882**	0.57	1286700	86	130	—	—	—	—	—	1400000	2000000
	GTN25 L4	**1025**	0.49	1286700	74	130	—	—	—	—	—	1400000	2000000
	GTN25 L4	**1101**	0.45	963200	52	130	—	—	—	—	—	1400000	2000000
	GTN25 L4	**1279**	0.39	963200	45	130	—	—	—	—	—	1400000	2000000

B

B

B GEARBOX SELECTION BY APPLICATION TORQUE

B 根据应用扭矩选择齿轮箱

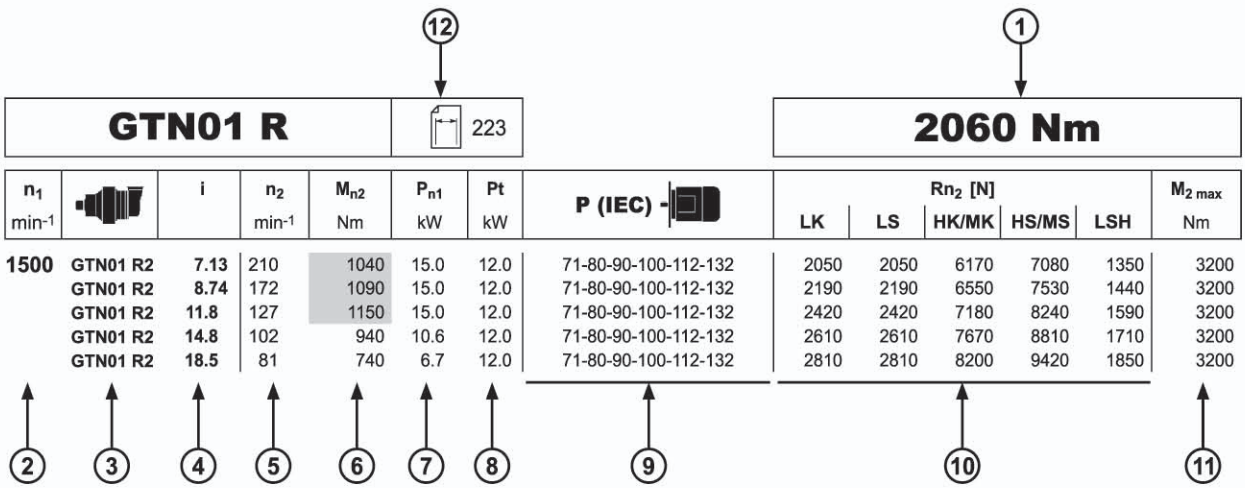

1	参考扭矩	*Reference torque*
2	输入转速	*Gearbox drive speed*
3	直角齿轮箱的机架尺寸注：后缀(B)或(C)旁边的框架尺寸是指不同的锥齿轮组，参考安装图纸	*Frame size of the right-angle gear unit. NOTE: letters (B) (C) near size indication identify different angle reduction dimensions. See pages relevant to dimensions*
4	传动比	*Gear ratio*
5	齿轮箱输出转速	*Gearbox output speed*
6	齿轮箱额定输出扭矩基于： –安全系数S=1–10000小时的理论寿命	*Gearbox rated output torque based on:* *- safety factor S=1* *- 10000 h theoretical lifetime*
7	齿轮箱额定输入功率，基于： –安全系数S=1–10000小时的理论寿命	*Gearbox rated input power, based on:* *- safety factor S=1* *- 10000 h theoretical lifetime*
8	齿轮箱热功率	*Gearbox thermal capacity*
9	可安装IEC电机机座号	*Frame size of available IEC motor*
10	输出轴允许悬挑载荷，基于：安全系数S=1对于不作用于轴中点的力，请参见特定齿轮箱尺寸后面的页面中提供的图表	*Permitted overhung loading on output shaft, based on:* *- safety factor S=1* *- 10000 h theoretical lifetime. For forces applying off mid-point of the shaft, see diagrams provided in the pages following dimensions of the specific gearbox*
11	最大扭矩	*Maximum torque*

GTN00 R — 1250 Nm

n_1 min^{-1}		i	n_2 min^{-1}	M_{n2} Nm	P_{n1} kW	Pt kW	P (IEC) -	Rn_2 [N] LK/MK	LS/MS	HK	HS	LSH	$M_{2\,max}$ Nm
1500	GTN00 R2	7.13	210	580	13.7	12.0	71-80-90-100-112-132	2050	2050	6170	7080	1350	2000
	GTN00 R2	8.74	172	610	11.7	12.0	71-80-90-100-112-132	2190	2190	6550	7530	1440	2400
	GTN00 R2	11.8	127	590	8.3	12.0	71-80-90-100-112-132	2420	2420	7180	8240	1590	2400
	GTN00 R2	14.8	102	510	5.7	12.0	71-80-90-100-112-132	2610	2610	7670	8810	1710	2400
	GTN00 R2	18.5	81	370	3.3	12.0	71-80-90-100-112-132	2810	2810	8200	9420	1850	2400
	GTN00 R3	24.8	60	730	5.1	12.0	71-80-90-100-112-132	3100	3100	8960	10300	2040	2000
	GTN00 R3	30.4	49	840	4.8	12.0	71-80-90-100-112-132	3320	3320	9530	10900	2180	2400
	GTN00 R3	37.3	40	840	3.9	12.0	71-80-90-100-112-132	3550	3550	10100	11600	2330	2400
	GTN00 R3	41.2	36	650	2.7	12.0	71-80-90-100-112-132	3670	3670	10400	12000	2410	2400
	GTN00 R3	50.4	29.8	850	2.9	12.0	71-80-90-100-112-132	3930	3930	11100	12700	2580	2400
	GTN00 R3	62.9	23.8	850	2.3	12.0	71-80-90-100-112-132	4230	4230	11800	13600	2780	2400
	GTN00 R3	68.2	22.0	650	1.6	12.0	71-80-90-100-112-132	4340	4340	12100	13900	2860	2400
	GTN00 R3	78.7	19.1	850	1.9	12.0	71-80-90-100-112-132	4550	4550	12700	14600	2990	2400
	GTN00 R3	85.2	17.6	650	1.3	12.0	71-80-90-100-112-132	4680	4680	13000	14900	3070	2400
	GTN00 R3	106	14.1	650	1.1	12.0	71-80-90-100-112-132	5040	5040	13900	15900	3310	2400
	GTN00 R3	133	11.3	550	0.71	12.0	71-80-90-100-112-132	5420	5420	14800	17000	3570	2400
	GTN00 R4	106	14.2	860	1.4	10.0	71-80-90-100-112-132	5030	5030	13800	15900	3310	2400
	GTN00 R4	130	11.6	860	1.2	10.0	71-80-90-100-112-132	5380	5380	14700	16900	3540	2400
	GTN00 R4	143	10.5	650	0.81	10.0	71-80-90-100-112-132	5560	5560	15200	17400	3660	2400
	GTN00 R4	159	9.4	870	0.97	10.0	71-80-90-100-112-132	5760	5760	15600	18000	3780	2400
	GTN00 R4	175	8.5	880	0.89	10.0	71-80-90-100-112-132	5950	5950	16100	18500	3910	2400
	GTN00 R4	215	7.0	910	0.75	10.0	71-80-90-100-112-132	6370	6370	17100	19700	4190	2400
	GTN00 R4	237	6.3	650	0.49	10.0	71-80-90-100-112-132	6580	6580	17600	20300	4330	2400
	GTN00 R4	268	5.6	930	0.62	10.0	71-80-90-100-112-132	6860	6860	18300	21000	4510	2400
	GTN00 R4	291	5.2	950	0.58	10.0	71-80-90-100-112-132	7040	7040	18800	21500	4630	2400
	GTN00 R4	363	4.1	980	0.48	10.0	71-80-90-100-112-132	7580	7580	20000	23000	4990	2400
	GTN00 R4	394	3.8	680	0.31	10.0	71-80-90-100-112-132	7790	7790	20500	23600	5120	2400
	GTN00 R4	453	3.3	1020	0.40	10.0	71-80-90-100-112-132	8160	8160	21400	24600	5370	2400
	GTN00 R4	491	3.1	710	0.25	10.0	71-80-90-100-112-132	8390	8390	21900	25200	5510	2400
	GTN00 R4	613	2.4	730	0.21	10.0	71-80-90-100-112-132	9030	9030	23500	27000	5940	2400
	GTN00 R4	766	2.0	760	0.18	10.0	71-80-90-100-112-132	9730	9730	25100	28800	6400	2400
1000	GTN00 R2	7.13	140	660	10.3	14.4	71-80-90-100-112-132	2340	2340	6960	8000	1540	2000
	GTN00 R2	8.74	114	690	8.8	14.4	71-80-90-100-112-132	2510	2510	7400	8500	1650	2400
	GTN00 R2	11.8	85	630	6.0	14.4	71-80-90-100-112-132	2770	2770	8100	9310	1820	2400
	GTN00 R2	14.8	68	530	4.0	14.4	71-80-90-100-112-132	2980	2980	8660	9950	1960	2400
	GTN00 R2	18.5	54	370	2.2	14.4	71-80-90-100-112-132	3220	3220	9260	10600	2110	2400
	GTN00 R3	24.8	40	730	3.4	14.4	71-80-90-100-112-132	3550	3550	10100	11600	2330	2000
	GTN00 R3	30.4	33	850	3.2	14.4	71-80-90-100-112-132	3800	3800	10800	12400	2500	2400
	GTN00 R3	37.3	26.8	850	2.6	14.4	71-80-90-100-112-132	4060	4060	11400	13100	2670	2400
	GTN00 R3	41.2	24.3	650	1.8	14.4	71-80-90-100-112-132	4200	4200	11800	13500	2760	2400
	GTN00 R3	50.4	19.8	850	1.9	14.4	71-80-90-100-112-132	4500	4500	12500	14400	2960	2400
	GTN00 R3	62.9	15.9	850	1.6	14.4	71-80-90-100-112-132	4840	4840	13400	15400	3180	2400
	GTN00 R3	68.2	14.7	650	1.1	14.4	71-80-90-100-112-132	4970	4970	13700	15800	3270	2400
	GTN00 R3	78.7	12.7	860	1.3	14.4	71-80-90-100-112-132	5210	5210	14300	16400	3430	2400
	GTN00 R3	85.2	11.7	650	0.88	14.4	71-80-90-100-112-132	5350	5350	14700	16800	3520	2400
	GTN00 R3	106	9.4	650	0.70	14.4	71-80-90-100-112-132	5770	5770	15700	18000	3790	2400
	GTN00 R3	133	7.5	550	0.48	14.4	71-80-90-100-112-132	6210	6210	16700	19200	4080	2400
	GTN00 R4	106	9.4	870	0.97	12.0	71-80-90-100-112-132	5760	5760	15600	18000	3780	2400
	GTN00 R4	130	7.7	890	0.81	12.0	71-80-90-100-112-132	6160	6160	16600	19100	4050	2400
	GTN00 R4	143	7.0	650	0.54	12.0	71-80-90-100-112-132	6370	6370	17100	19700	4190	2400
	GTN00 R4	159	6.3	920	0.68	12.0	71-80-90-100-112-132	6590	6590	17700	20300	4330	2400
	GTN00 R4	175	5.7	930	0.63	12.0	71-80-90-100-112-132	6810	6810	18200	20900	4480	2400
	GTN00 R4	215	4.7	960	0.53	12.0	71-80-90-100-112-132	7290	7290	19300	22200	4790	2400
	GTN00 R4	237	4.2	670	0.33	12.0	71-80-90-100-112-132	7540	7540	19900	22900	4950	2400
	GTN00 R4	268	3.7	1000	0.44	12.0	71-80-90-100-112-132	7850	7850	20700	23800	5160	2400
	GTN00 R4	291	3.4	1010	0.41	12.0	71-80-90-100-112-132	8060	8060	21200	24300	5300	2400
	GTN00 R4	363	2.8	1050	0.34	12.0	71-80-90-100-112-132	8680	8680	22600	26000	5710	2400
	GTN00 R4	394	2.5	730	0.22	12.0	71-80-90-100-112-132	8920	8920	23200	26600	5860	2400
	GTN00 R4	453	2.2	1090	0.29	12.0	71-80-90-100-112-132	9350	9350	24200	27800	6140	2400
	GTN00 R4	491	2.0	760	0.18	12.0	71-80-90-100-112-132	9600	9600	24800	28500	6310	2400
	GTN00 R4	613	1.6	790	0.15	12.0	71-80-90-100-112-132	10300	10300	26500	30400	6800	2400
	GTN00 R4	766	1.3	820	0.13	12.0	71-80-90-100-112-132	11100	11100	28300	32500	7320	2400

B

GTN00 R — 1250 Nm

n_1 min^{-1}		i	n_2 min^{-1}	M_{n2} Nm	P_{n1} kW	Pt kW	P (IEC)	Rn_2 [N] LK/MK	LS/MS	HK	HS	LSH	$M_{2\,max}$ Nm
500	GTN00 R2	7.13	70	730	5.7	24	71-80-90-100-112-132	2950	2950	8570	9850	1940	2000
	GTN00 R2	8.74	57	820	5.2	24	71-80-90-100-112-132	3160	3160	9110	10500	2080	2400
	GTN00 R2	11.8	42	650	3.1	24	71-80-90-100-112-132	3490	3490	9980	11500	2300	2400
	GTN00 R2	14.8	34	550	2.1	24	71-80-90-100-112-132	3760	3760	10700	12300	2470	2400
	GTN00 R2	18.5	27.1	370	1.1	24	71-80-90-100-112-132	4050	4050	11400	13100	2660	2400
	GTN00 R3	24.8	20.1	730	1.7	24	71-80-90-100-112-132	4470	4470	12500	14300	2940	2000
	GTN00 R3	30.4	16.4	850	1.6	24	71-80-90-100-112-132	4790	4790	13200	15200	3150	2400
	GTN00 R3	37.3	13.4	860	1.3	24	71-80-90-100-112-132	5120	5120	14100	16200	3370	2400
	GTN00 R3	41.2	12.1	650	0.91	24	71-80-90-100-112-132	5290	5290	14500	16700	3480	2400
	GTN00 R3	50.4	9.9	860	0.98	24	71-80-90-100-112-132	5660	5660	15400	17700	3720	2400
	GTN00 R3	62.9	7.9	890	0.81	24	71-80-90-100-112-132	6100	6100	16500	18900	4010	2400
	GTN00 R3	68.2	7.3	650	0.55	24	71-80-90-100-112-132	6260	6260	16900	19400	4120	2400
	GTN00 R3	78.7	6.4	920	0.67	24	71-80-90-100-112-132	6570	6570	17600	20200	4320	2400
	GTN00 R3	85.2	5.9	650	0.44	24	71-80-90-100-112-132	6750	6750	18000	20700	4430	2400
	GTN00 R3	106	4.7	660	0.35	24	71-80-90-100-112-132	7270	7270	19300	22200	4780	2400
	GTN00 R3	133	3.8	570	0.25	24	71-80-90-100-112-132	7820	7820	20600	23700	5140	2400
	GTN00 R4	106	4.7	960	0.54	20	71-80-90-100-112-132	7250	7250	19300	22100	4770	2400
	GTN00 R4	130	3.9	990	0.45	20	71-80-90-100-112-132	7760	7760	20500	23500	5100	2400
	GTN00 R4	143	3.5	690	0.29	20	71-80-90-100-112-132	8020	8020	21100	24200	5270	2400
	GTN00 R4	159	3.1	1030	0.38	20	71-80-90-100-112-132	8300	8300	21700	25000	5460	2400
	GTN00 R4	175	2.8	1050	0.35	20	71-80-90-100-112-132	8580	8580	22400	25700	5640	2400
	GTN00 R4	215	2.3	1080	0.30	20	71-80-90-100-112-132	9180	9180	23800	27400	6040	2400
	GTN00 R4	237	2.1	750	0.19	20	71-80-90-100-112-132	9490	9490	24500	28200	6240	2400
	GTN00 R4	268	1.9	1120	0.25	20	71-80-90-100-112-132	9890	9890	25500	29200	6500	2400
	GTN00 R4	291	1.7	1140	0.23	20	71-80-90-100-112-132	10200	10200	26100	30000	6680	2400
	GTN00 R4	363	1.4	1180	0.19	20	71-80-90-100-112-132	10900	10900	27900	32000	7190	2400
	GTN00 R4	394	1.3	820	0.12	20	71-80-90-100-112-132	11200	11200	28600	32800	7390	2400
	GTN00 R4	453	1.1	1230	0.16	20	71-80-90-100-112-132	11800	11800	29800	34000	7740	2400
	GTN00 R4	491	1.0	860	0.10	20	71-80-90-100-112-132	12000	12100	30500	34000	7950	2400
	GTN00 R4	613	0.82	860	0.08	20	71-80-90-100-112-132	12000	12500	31000	34000	8000	2400
	GTN00 R4	766	0.65	860	0.07	20	71-80-90-100-112-132	12000	12500	31000	34000	8000	2400

GTN01 R — 2060 Nm

n_1 min^{-1}		i	n_2 min^{-1}	M_{n2} Nm	P_{n1} kW	Pt kW	P (IEC)	Rn_2 [N] LK/MK	LS/MS	HK	HS	LSH	$M_{2\,max}$ Nm
1500	GTN01 R2	7.13	210	1040	15.0	12.0	71-80-90-100-112-132	2050	2050	6170	7080	1350	3200
	GTN01 R2	8.74	172	1090	15.0	12.0	71-80-90-100-112-132	2190	2190	6550	7530	1440	3200
	GTN01 R2	11.8	127	1150	15.0	12.0	71-80-90-100-112-132	2420	2420	7180	8240	1590	3200
	GTN01 R2	14.8	102	940	10.6	12.0	71-80-90-100-112-132	2610	2610	7670	8810	1710	3200
	GTN01 R2	18.5	81	740	6.7	12.0	71-80-90-100-112-132	2810	2810	8200	9420	1850	3200
	GTN01 R3	24.8	60	1390	9.7	12.0	71-80-90-100-112-132	3100	3100	8960	10300	2040	3400
	GTN01 R3	30.4	49	1580	8.9	12.0	71-80-90-100-112-132	3320	3320	9530	10900	2180	3400
	GTN01 R3	37.3	40	1600	7.4	12.0	71-80-90-100-112-132	3550	3550	10100	11600	2330	3400
	GTN01 R3	41.2	36	1300	5.4	12.0	71-80-90-100-112-132	3670	3670	10400	12000	2410	3400
	GTN01 R3	50.4	29.8	1630	5.6	12.0	71-80-90-100-112-132	3930	3930	11100	12700	2580	3400
	GTN01 R3	62.9	23.8	1650	4.5	12.0	71-80-90-100-112-132	4230	4230	11800	13600	2780	3400
	GTN01 R3	68.2	22.0	1300	3.3	12.0	71-80-90-100-112-132	4340	4340	12100	13900	2860	3400
	GTN01 R3	78.7	19.1	1570	3.4	12.0	71-80-90-100-112-132	4550	4550	12700	14600	2990	3400
	GTN01 R3	85.2	17.6	1300	2.6	12.0	71-80-90-100-112-132	4680	4680	13000	14900	3070	3400
	GTN01 R3	106	14.1	1300	2.1	12.0	71-80-90-100-112-132	5040	5040	13900	15900	3310	3400
	GTN01 R3	133	11.3	1150	1.5	12.0	71-80-90-100-112-132	5420	5420	14800	17000	3570	3400
	GTN01 R4	106	14.2	1700	2.8	10.0	71-80-90-100-112-132	5030	5030	13800	15900	3310	3400
	GTN01 R4	130	11.6	1720	2.3	10.0	71-80-90-100-112-132	5380	5380	14700	16900	3540	3400
	GTN01 R4	143	10.5	1300	1.6	10.0	71-80-90-100-112-132	5560	5560	15200	17400	3660	3400
	GTN01 R4	159	9.4	1740	1.9	10.0	71-80-90-100-112-132	5760	5760	15600	18000	3780	3400
	GTN01 R4	175	8.5	1770	1.8	10.0	71-80-90-100-112-132	5950	5950	16100	18500	3910	3400
	GTN01 R4	215	7.0	1820	1.5	10.0	71-80-90-100-112-132	6370	6370	17100	19700	4190	3400
	GTN01 R4	237	6.3	1300	0.97	10.0	71-80-90-100-112-132	6580	6580	17600	20300	4330	3400

B

GTN01 R — 2060 Nm

n_1 min^{-1}		i	n_2 min^{-1}	M_{n2} Nm	P_{n1} kW	Pt kW	P (IEC)	Rn_2 [N] LK	LS	HK/MK	HS/MS	LSH	$M_{2\,max}$ Nm
1500	GTN01 R4	268	5.6	1870	1.2	10.0	71-80-90-100-112-132	6860	6860	18300	21000	4510	3400
	GTN01 R4	291	5.2	1890	1.2	10.0	71-80-90-100-112-132	7040	7040	18800	21500	4630	3400
	GTN01 R4	363	4.1	1960	0.96	10.0	71-80-90-100-112-132	7580	7580	20000	23000	4990	3400
	GTN01 R4	394	3.8	1360	0.61	10.0	71-80-90-100-112-132	7790	7790	20500	23600	5120	3400
	GTN01 R4	453	3.3	1930	0.76	10.0	71-80-90-100-112-132	8160	8160	21400	24600	5370	3400
	GTN01 R4	491	3.1	1410	0.51	10.0	71-80-90-100-112-132	8390	8390	21900	25200	5510	3400
	GTN01 R4	613	2.4	1470	0.42	10.0	71-80-90-100-112-132	9030	9030	23500	27000	5940	3400
	GTN01 R4	766	2.0	1530	0.35	10.0	71-80-90-100-112-132	9730	9730	25100	28800	6400	3400
1000	GTN01 R2	7.13	140	1170	15.0	14.4	71-80-90-100-112-132	2340	2340	6960	8000	1540	3200
	GTN01 R2	8.74	114	1230	15.0	14.4	71-80-90-100-112-132	2510	2510	7400	8500	1650	3200
	GTN01 R2	11.8	85	1250	11.8	14.4	71-80-90-100-112-132	2770	2770	8100	9310	1820	3200
	GTN01 R2	14.8	68	1050	7.9	14.4	71-80-90-100-112-132	2980	2980	8660	9950	1960	3200
	GTN01 R2	18.5	54	740	4.5	14.4	71-80-90-100-112-132	3220	3220	9260	10600	2110	3200
	GTN01 R3	24.8	40	1430	6.6	14.4	71-80-90-100-112-132	3550	3550	10100	11600	2330	3400
	GTN01 R3	30.4	33	1620	6.1	14.4	71-80-90-100-112-132	3800	3800	10800	12400	2500	3400
	GTN01 R3	37.3	26.8	1640	5.0	14.4	71-80-90-100-112-132	4060	4060	11400	13100	2670	3400
	GTN01 R3	41.2	24.3	1300	3.6	14.4	71-80-90-100-112-132	4200	4200	11800	13500	2760	3400
	GTN01 R3	50.4	19.8	1660	3.8	14.4	71-80-90-100-112-132	4500	4500	12500	14400	2960	3400
	GTN01 R3	62.9	15.9	1690	3.1	14.4	71-80-90-100-112-132	4840	4840	13400	15400	3180	3400
	GTN01 R3	68.2	14.7	1300	2.2	14.4	71-80-90-100-112-132	4970	4970	13700	15800	3270	3400
	GTN01 R3	78.7	12.7	1590	2.3	14.4	71-80-90-100-112-132	5210	5210	14300	16400	3430	3400
	GTN01 R3	85.2	11.7	1300	1.8	14.4	71-80-90-100-112-132	5350	5350	14700	16800	3520	3400
	GTN01 R3	106	9.4	1300	1.4	14.4	71-80-90-100-112-132	5770	5770	15700	18000	3790	3400
	GTN01 R3	133	7.5	1150	0.99	14.4	71-80-90-100-112-132	6210	6210	16700	19200	4080	3400
	GTN01 R4	106	9.4	1740	1.9	12.0	71-80-90-100-112-132	5760	5760	15600	18000	3780	3400
	GTN01 R4	130	7.7	1790	1.6	12.0	71-80-90-100-112-132	6160	6160	16600	19100	4050	3400
	GTN01 R4	143	7.0	1300	1.1	12.0	71-80-90-100-112-132	6370	6370	17100	19700	4190	3400
	GTN01 R4	159	6.3	1840	1.4	12.0	71-80-90-100-112-132	6590	6590	17700	20300	4330	3400
	GTN01 R4	175	5.7	1870	1.3	12.0	71-80-90-100-112-132	6810	6810	18200	20900	4480	3400
	GTN01 R4	215	4.7	1920	1.1	12.0	71-80-90-100-112-132	7290	7290	19300	22200	4790	3400
	GTN01 R4	237	4.2	1340	0.67	12.0	71-80-90-100-112-132	7540	7540	19900	22900	4950	3400
	GTN01 R4	268	3.7	2000	0.88	12.0	71-80-90-100-112-132	7850	7850	20700	23800	5160	3400
	GTN01 R4	291	3.4	2030	0.82	12.0	71-80-90-100-112-132	8060	8060	21200	24300	5300	3400
	GTN01 R4	363	2.8	2100	0.69	12.0	71-80-90-100-112-132	8680	8680	22600	26000	5710	3400
	GTN01 R4	394	2.5	1460	0.44	12.0	71-80-90-100-112-132	8920	8920	23200	26600	5860	3400
	GTN01 R4	453	2.2	2000	0.52	12.0	71-80-90-100-112-132	9350	9350	24200	27800	6140	3400
	GTN01 R4	491	2.0	1510	0.36	12.0	71-80-90-100-112-132	9600	9600	24800	28500	6310	3400
	GTN01 R4	613	1.6	1580	0.30	12.0	71-80-90-100-112-132	10300	10300	26500	30400	6800	3400
	GTN01 R4	766	1.3	1640	0.25	12.0	71-80-90-100-112-132	11100	11100	28300	32500	7320	3400
500	GTN01 R2	7.13	70	1370	10.6	24	71-80-90-100-112-132	2950	2950	8570	9850	1940	3200
	GTN01 R2	8.74	57	1520	9.7	24	71-80-90-100-112-132	3160	3160	9110	10500	2080	3200
	GTN01 R2	11.8	42	1300	6.1	24	71-80-90-100-112-132	3490	3490	9980	11500	2300	3200
	GTN01 R2	14.8	34	1150	4.3	24	71-80-90-100-112-132	3760	3760	10700	12300	2470	3200
	GTN01 R2	18.5	27.1	740	2.2	24	71-80-90-100-112-132	4050	4050	11400	13100	2660	3200
	GTN01 R3	24.8	20.1	1430	3.3	24	71-80-90-100-112-132	4470	4470	12500	14300	2940	3400
	GTN01 R3	30.4	16.4	1680	3.2	24	71-80-90-100-112-132	4790	4790	13200	15200	3150	3400
	GTN01 R3	37.3	13.4	1700	2.6	24	71-80-90-100-112-132	5120	5120	14100	16200	3370	3400
	GTN01 R3	41.2	12.1	1300	1.8	24	71-80-90-100-112-132	5290	5290	14500	16700	3480	3400
	GTN01 R3	50.4	9.9	1730	2.0	24	71-80-90-100-112-132	5660	5660	15400	17700	3720	3400
	GTN01 R3	62.9	7.9	1760	1.6	24	71-80-90-100-112-132	6100	6100	16500	18900	4010	3400
	GTN01 R3	68.2	7.3	1300	1.1	24	71-80-90-100-112-132	6260	6260	16900	19400	4120	3400
	GTN01 R3	78.7	6.4	1600	1.2	24	71-80-90-100-112-132	6570	6570	17600	20200	4320	3400
	GTN01 R3	85.2	5.9	1300	0.88	24	71-80-90-100-112-132	6750	6750	18000	20700	4430	3400
	GTN01 R3	106	4.7	1310	0.71	24	71-80-90-100-112-132	7270	7270	19300	22200	4780	3400
	GTN01 R3	133	3.8	1150	0.50	24	71-80-90-100-112-132	7820	7820	20600	23700	5140	3400
	GTN01 R4	106	4.7	1920	1.1	20	71-80-90-100-112-132	7250	7250	19300	22100	4770	3400
	GTN01 R4	130	3.9	1990	0.91	20	71-80-90-100-112-132	7760	7760	20500	23500	5100	3400
	GTN01 R4	143	3.5	1380	0.57	20	71-80-90-100-112-132	8020	8020	21100	24200	5270	3400
	GTN01 R4	159	3.1	2060	0.77	20	71-80-90-100-112-132	8300	8300	21700	25000	5460	3400
	GTN01 R4	175	2.8	2090	0.71	20	71-80-90-100-112-132	8580	8580	22400	25700	5640	3400
	GTN01 R4	215	2.3	2160	0.60	20	71-80-90-100-112-132	9180	9180	23800	27400	6040	3400

B

GTN01 R — 2060 Nm

n_1 min^{-1}		i	n_2 min^{-1}	M_{n2} Nm	P_{n1} kW	Pt kW	P (IEC)	Rn_2 [N] LK	LS	HK/MK	HS/MS	LSH	$M_{2\,max}$ Nm
500	GTN01 R4	237	2.1	1510	0.37	20	71-80-90-100-112-132	9490	9490	24500	28200	6240	3400
	GTN01 R4	268	1.9	2240	0.49	20	71-80-90-100-112-132	9890	9890	25500	29200	6500	3400
	GTN01 R4	291	1.7	2270	0.46	20	71-80-90-100-112-132	10200	10200	26100	30000	6680	3400
	GTN01 R4	363	1.4	2340	0.38	20	71-80-90-100-112-132	10900	10900	27900	32000	7190	3400
	GTN01 R4	394	1.3	1650	0.25	20	71-80-90-100-112-132	11200	11200	28600	32800	7390	3400
	GTN01 R4	453	1.1	2000	0.26	20	71-80-90-100-112-132	11800	11800	29800	34000	7740	3400
	GTN01 R4	491	1.0	1710	0.21	20	71-80-90-100-112-132	12000	12100	30500	34000	7950	3400
	GTN01 R4	613	0.82	1720	0.17	20	71-80-90-100-112-132	12000	12500	31000	34000	8000	3400
	GTN01 R4	766	0.65	1720	0.13	20	71-80-90-100-112-132	12000	12500	31000	34000	8000	3400

GTN03 R — 2970 Nm

n_1 min^{-1}		i	n_2 min^{-1}	M_{n2} Nm	P_{n1} kW	Pt kW	P (IEC)	Rn_2 [N] LK	LS	HK/MK	HS/MS	LSH	$M_{2\,max}$ Nm
1500	GTN03 R2	9.23	163	1680	30	18.0	71-80-90-100-112-132	6850	7910	13600	16400	4400	5200
	GTN03 R2	10.9	138	1900	29	18.0	71-80-90-100-112-132	7240	8360	14300	17200	4650	5200
	GTN03 R2	13.7	110	1970	24	18.0	71-80-90-100-112-132	7810	9020	15300	18400	5010	5200
	GTN03 R2	15.9	94	1820	19.1	18.0	71-80-90-100-112-132	8220	9480	16000	19300	5270	5200
	GTN03 R2	19.2	78	1550	13.5	18.0	71-80-90-100-112-132	8750	10100	16900	20400	5620	5200
	GTN03 R2	24.8	61	860	5.8	18.0	71-80-90-100-112-132	9530	11000	18300	22000	6110	5200
	GTN03 R3	25.7	58	2030	13.6	14.0	71-80-90-100-112-132	9640	11100	18500	22200	6190	5200
	GTN03 R3	31.5	48	2110	11.5	14.0	71-80-90-100-112-132	10300	11900	19600	23600	6620	5200
	GTN03 R3	37.1	40	2390	11.1	14.0	71-80-90-100-112-132	10900	12600	20600	24800	7000	5200
	GTN03 R3	42.6	35	2070	8.4	14.0	71-80-90-100-112-132	11400	13200	21500	25900	7320	5200
	GTN03 R3	46.6	32	2160	8.0	14.0	71-80-90-100-112-132	11800	13600	22100	26600	7550	5200
	GTN03 R3	50.3	29.8	2380	8.2	14.0	71-80-90-100-112-132	12100	13900	22600	27200	7740	5200
	GTN03 R3	54.2	27.7	1820	5.8	14.0	71-80-90-100-112-132	12400	14300	23100	27800	7930	5200
	GTN03 R3	63.1	23.8	2170	5.9	14.0	71-80-90-100-112-132	13000	15000	24200	29100	8350	5200
	GTN03 R3	73.3	20.5	1820	4.3	14.0	71-80-90-100-112-132	13700	15800	25300	30500	8780	5200
	GTN03 R3	78.7	19.1	2180	4.8	14.0	71-80-90-100-112-132	14000	16200	25900	31100	8990	5200
	GTN03 R3	91.5	16.4	1820	3.4	14.0	71-80-90-100-112-132	14700	17000	27100	32600	9450	5200
	GTN03 R3	114	13.1	1820	2.7	14.0	71-80-90-100-112-132	15900	18300	28900	34800	10200	5200
	GTN03 R4	129	11.6	2620	3.6	12.0	71-80-90-100-112-132	16500	19100	30000	36100	10600	5200
	GTN03 R4	148	10.1	2310	2.8	12.0	71-80-90-100-112-132	17300	20000	31300	37600	11100	5200
	GTN03 R4	158	9.5	2660	3.0	12.0	71-80-90-100-112-132	17700	20400	31900	38400	11300	5200
	GTN03 R4	185	8.1	2310	2.2	12.0	71-80-90-100-112-132	18600	21500	33400	40200	11900	5200
	GTN03 R4	214	7.0	2730	2.3	12.0	71-80-90-100-112-132	19600	22600	34900	42000	12500	5200
	GTN03 R4	231	6.5	1830	1.4	12.0	71-80-90-100-112-132	20100	23100	35700	43000	12900	5200
	GTN03 R4	255	5.9	1840	1.3	12.0	71-80-90-100-112-132	20700	23900	36800	44300	13300	5200
	GTN03 R4	290	5.2	2650	1.6	12.0	71-80-90-100-112-132	21600	25000	38300	46000	13900	5200
	GTN03 R4	313	4.8	1850	1.1	12.0	71-80-90-100-112-132	22200	25600	39100	47100	14200	5200
	GTN03 R4	336	4.5	2270	1.2	12.0	71-80-90-100-112-132	22700	26200	40000	48100	14600	5200
	GTN03 R4	364	4.1	2310	1.1	12.0	71-80-90-100-112-132	23300	26900	40900	49300	15000	5200
	GTN03 R4	390	3.8	1930	0.88	12.0	71-80-90-100-112-132	23900	27600	41800	50300	15300	5200
	GTN03 R4	452	3.3	2250	0.88	12.0	71-80-90-100-112-132	25100	28900	43700	52600	16100	5200
	GTN03 R4	528	2.8	2030	0.68	12.0	71-80-90-100-112-132	26400	30500	45800	55100	16900	5200
	GTN03 R4	567	2.6	2430	0.76	12.0	71-80-90-100-112-132	27000	31200	46800	56300	17400	5200
	GTN03 R4	659	2.3	2110	0.57	12.0	71-80-90-100-112-132	28400	32800	48900	58900	18200	5200
	GTN03 R4	797	1.9	1820	0.41	12.0	71-80-90-100-112-132	30300	35000	51800	62300	19400	5200
	GTN03 R4	824	1.8	2200	0.47	12.0	71-80-90-100-112-132	30600	35400	52300	62900	19700	5200
1000	GTN03 R2	9.23	108	1890	23	22	71-80-90-100-112-132	7850	9060	15400	18500	5030	5200
	GTN03 R2	10.9	92	2140	22	22	71-80-90-100-112-132	8290	9570	16100	19400	5320	5200
	GTN03 R2	13.7	73	2080	16.9	22	71-80-90-100-112-132	8940	10300	17300	20800	5740	5200
	GTN03 R2	15.9	63	1820	12.7	22	71-80-90-100-112-132	9400	10900	18100	21700	6030	5200
	GTN03 R2	19.2	52	1640	9.5	22	71-80-90-100-112-132	10000	11600	19100	23000	6430	5200
	GTN03 R2	24.8	40	860	3.9	22	71-80-90-100-112-132	10900	12600	20700	24800	7000	5200
	GTN03 R3	25.7	39	2160	9.6	16.8	71-80-90-100-112-132	11000	12700	20900	25100	7080	5200
	GTN03 R3	31.5	32	2160	7.9	16.8	71-80-90-100-112-132	11800	13600	22200	26700	7580	5200
	GTN03 R3	37.1	26.9	2460	7.6	16.8	71-80-90-100-112-132	12500	14400	23300	28100	8010	5200
	GTN03 R3	42.6	23.5	2110	5.7	16.8	71-80-90-100-112-132	13100	15100	24300	29200	8380	5200

B

GTN03 R

2970 Nm

n_1 min^{-1}		i	n_2 min^{-1}	M_{n2} Nm	P_{n1} kW	Pt kW	P (IEC)	Rn_2 [N] LK	LS	HK/MK	HS/MS	LSH	$M_{2\,max}$ Nm
1000	GTN03 R3	46.6	21.5	2170	5.3	16.8	71-80-90-100-112-132	13500	15500	25000	30000	8640	5200
	GTN03 R3	50.3	19.9	2470	5.6	16.8	71-80-90-100-112-132	13800	15900	25500	30700	8860	5200
	GTN03 R3	54.2	18.5	1820	3.9	16.8	71-80-90-100-112-132	14200	16300	26100	31400	9080	5200
	GTN03 R3	63.1	15.9	2180	4.0	16.8	71-80-90-100-112-132	14900	17200	27300	32900	9550	5200
	GTN03 R3	73.3	13.6	1820	2.8	16.8	71-80-90-100-112-132	15700	18100	28600	34400	10000	5200
	GTN03 R3	78.7	12.7	2190	3.2	16.8	71-80-90-100-112-132	16000	18500	29200	35100	10300	5200
	GTN03 R3	91.5	10.9	1820	2.3	16.8	71-80-90-100-112-132	16900	19500	30600	36800	10800	5200
	GTN03 R3	114	8.7	1820	1.8	16.8	71-80-90-100-112-132	18200	21000	32700	39300	11700	5200
	GTN03 R4	129	7.7	2710	2.5	14.4	71-80-90-100-112-132	18900	21800	33900	40800	12100	5200
	GTN03 R4	148	6.7	2310	1.8	14.4	71-80-90-100-112-132	19800	22900	35300	42500	12700	5200
	GTN03 R4	158	6.3	2760	2.1	14.4	71-80-90-100-112-132	20200	23400	36000	43300	13000	5200
	GTN03 R4	185	5.4	2310	1.5	14.4	71-80-90-100-112-132	21300	24600	37700	45400	13700	5200
	GTN03 R4	214	4.7	2810	1.6	14.4	71-80-90-100-112-132	22400	25800	39500	47500	14400	5200
	GTN03 R4	231	4.3	1890	0.97	14.4	71-80-90-100-112-132	23000	26500	40300	48500	14700	5200
	GTN03 R4	255	3.9	1920	0.89	14.4	71-80-90-100-112-132	23700	27400	41600	50000	15200	5200
	GTN03 R4	290	3.4	2680	1.1	14.4	71-80-90-100-112-132	24800	28600	43200	52000	15900	5200
	GTN03 R4	313	3.2	1990	0.75	14.4	71-80-90-100-112-132	25400	29300	44200	53200	16300	5200
	GTN03 R4	336	3.0	2440	0.86	14.4	71-80-90-100-112-132	26000	30000	45100	54300	16700	5200
	GTN03 R4	364	2.7	2480	0.81	14.4	71-80-90-100-112-132	26700	30800	46200	55600	17100	5200
	GTN03 R4	390	2.6	2070	0.63	14.4	71-80-90-100-112-132	27300	31600	47200	56800	17500	5200
	GTN03 R4	452	2.2	2250	0.59	14.4	71-80-90-100-112-132	28700	33100	49300	59400	18400	5200
	GTN03 R4	528	1.9	2180	0.49	14.4	71-80-90-100-112-132	30200	34900	51700	62200	19400	5200
	GTN03 R4	567	1.8	2600	0.54	14.4	71-80-90-100-112-132	31000	35700	52800	63500	19900	5200
	GTN03 R4	659	1.5	2270	0.41	14.4	71-80-90-100-112-132	32600	37600	55300	66500	20900	5200
	GTN03 R4	797	1.3	1930	0.29	14.4	71-80-90-100-112-132	34700	40000	58500	70400	22300	5200
	GTN03 R4	824	1.2	2360	0.34	14.4	71-80-90-100-112-132	35100	40500	59100	71100	22500	5200
500	GTN03 R2	9.23	54	2260	13.7	36	71-80-90-100-112-132	9890	11400	18900	22700	6340	5200
	GTN03 R2	10.9	46	2570	13.2	36	71-80-90-100-112-132	10400	12100	19900	23900	6700	5200
	GTN03 R2	13.7	37	2150	8.8	36	71-80-90-100-112-132	11300	13000	21300	25600	7230	5200
	GTN03 R2	15.9	31	1820	6.4	36	71-80-90-100-112-132	11800	13700	22300	26800	7600	5200
	GTN03 R2	19.2	26.0	1650	4.8	36	71-80-90-100-112-132	12600	14600	23600	28300	8100	5200
	GTN03 R2	24.8	20.2	860	1.9	36	71-80-90-100-112-132	13700	15900	25400	30600	8810	5200
	GTN03 R3	25.7	19.5	2230	5.0	28	71-80-90-100-112-132	13900	16100	25700	30900	8920	5200
	GTN03 R3	31.5	15.9	2250	4.1	28	71-80-90-100-112-132	14900	17200	27300	32900	9550	5200
	GTN03 R3	37.1	13.5	2590	4.0	28	71-80-90-100-112-132	15700	18200	28700	34500	10100	5200
	GTN03 R3	42.6	11.7	2190	3.0	28	71-80-90-100-112-132	16500	19000	29900	36000	10600	5200
	GTN03 R3	46.6	10.7	2200	2.7	28	71-80-90-100-112-132	17000	19600	30700	37000	10900	5200
	GTN03 R3	50.3	9.9	2620	3.0	28	71-80-90-100-112-132	17400	20100	31400	37800	11200	5200
	GTN03 R3	54.2	9.2	1820	1.9	28	71-80-90-100-112-132	17800	20600	32200	38700	11400	5200
	GTN03 R3	63.1	7.9	2210	2.0	28	71-80-90-100-112-132	18800	21700	33700	40500	12000	5200
	GTN03 R3	73.3	6.8	1830	1.4	28	71-80-90-100-112-132	19700	22800	35200	42400	12700	5200
	GTN03 R3	78.7	6.4	2220	1.6	28	71-80-90-100-112-132	20200	23300	36000	43300	13000	5200
	GTN03 R3	91.5	5.5	1840	1.2	28	71-80-90-100-112-132	21200	24500	37600	45300	13600	5200
	GTN03 R3	114	4.4	1880	0.94	28	71-80-90-100-112-132	22900	26400	40200	48400	14700	5200
	GTN03 R4	129	3.9	2810	1.3	24	71-80-90-100-112-132	23800	27500	41700	50200	15300	5200
	GTN03 R4	148	3.4	2310	0.92	24	71-80-90-100-112-132	24900	28800	43500	52300	16000	5200
	GTN03 R4	158	3.2	2810	1.0	24	71-80-90-100-112-132	25500	29400	44400	53400	16400	5200
	GTN03 R4	185	2.7	2310	0.74	24	71-80-90-100-112-132	26900	31000	46500	55900	17200	5200
	GTN03 R4	214	2.3	2820	0.78	24	71-80-90-100-112-132	28200	32600	48600	58400	18100	5200
	GTN03 R4	231	2.2	2130	0.55	24	71-80-90-100-112-132	28900	33400	49700	59800	18600	5200
	GTN03 R4	255	2.0	2170	0.50	24	71-80-90-100-112-132	29900	34500	51200	61600	19200	5200
	GTN03 R4	290	1.7	2730	0.56	24	71-80-90-100-112-132	31200	36000	53200	64000	20000	5200
	GTN03 R4	313	1.6	2250	0.43	24	71-80-90-100-112-132	32000	36900	54400	65400	20500	5200
	GTN03 R4	336	1.5	2700	0.48	24	71-80-90-100-112-132	32800	37800	55600	66900	21000	5200
	GTN03 R4	364	1.4	2730	0.44	24	71-80-90-100-112-132	33700	38800	56900	68500	21600	5200
	GTN03 R4	390	1.3	2340	0.35	24	71-80-90-100-112-132	34400	39800	58100	69900	22100	5200
	GTN03 R4	452	1.1	2250	0.29	24	71-80-90-100-112-132	36000	41700	60700	73100	23200	5200
	GTN03 R4	528	0.95	2440	0.27	24	71-80-90-100-112-132	36000	42000	63700	74000	24000	5200
	GTN03 R4	567	0.88	2850	0.30	24	71-80-90-100-112-132	36000	42000	64000	74000	24000	5200
	GTN03 R4	659	0.76	2440	0.22	24	71-80-90-100-112-132	36000	42000	64000	74000	24000	5200
	GTN03 R4	797	0.63	2000	0.15	24	71-80-90-100-112-132	36000	42000	64000	74000	24000	5200
	GTN03 R4	824	0.61	2440	0.18	24	71-80-90-100-112-132	36000	42000	64000	74000	24000	5200

B

GTN04 R

3960 Nm

n_1 min^{-1}		i	n_2 min^{-1}	M_{n2} Nm	P_{n1} kW	Pt kW	P (IEC)	Rn_2 [N] LK	LS	HK/MK	HS/MS	LSH	$M_{2\,max}$ Nm
1500	GTN04 R2	9.23	163	1680	30	18.0	71-80-90-100-112-132	6850	7910	13600	16400	4400	6600
	GTN04 R2	10.9	138	1980	30	18.0	71-80-90-100-112-132	7240	8360	14300	17200	4650	6600
	GTN04 R2	13.7	110	2490	30	18.0	71-80-90-100-112-132	7810	9020	15300	18400	5010	6600
	GTN04 R2	16.8	89	2390	24	18.0	71-80-90-100-112-132	8380	9670	16300	19600	5370	6600
	GTN04 R3	25.7	58	3020	15.0	14.0	71-80-90-100-112-132	9640	11100	18500	22200	6190	7300
	GTN04 R3	31.5	48	3090	15.0	14.0	71-80-90-100-112-132	10300	11900	19600	23600	6620	7300
	GTN04 R3	37.1	40	3440	15.0	14.0	71-80-90-100-112-132	10900	12600	20600	24800	7000	7300
	GTN04 R3	42.6	35	3190	12.9	14.0	71-80-90-100-112-132	11400	13200	21500	25900	7320	7300
	GTN04 R3	46.6	32	2850	10.5	14.0	71-80-90-100-112-132	11800	13600	22100	26600	7550	7300
	GTN04 R3	50.3	29.8	3460	11.9	14.0	71-80-90-100-112-132	12100	13900	22600	27200	7740	7300
	GTN04 R3	63.1	23.8	2850	7.8	14.0	71-80-90-100-112-132	13000	15000	24200	29100	8350	7300
	GTN04 R3	78.7	19.1	2850	6.2	14.0	71-80-90-100-112-132	14000	16200	25900	31100	8990	7300
	GTN04 R3	97.0	15.5	2390	4.2	14.0	71-80-90-100-112-132	15000	17300	27500	33100	9630	7300
	GTN04 R3	121	12.4	2390	3.4	14.0	71-80-90-100-112-132	16200	18700	29400	35400	10400	7300
	GTN04 R4	89.4	16.8	3330	6.6	12.0	71-80-90-100-112-132	14600	16900	26900	32300	9370	7300
	GTN04 R4	109	13.7	3370	5.5	12.0	71-80-90-100-112-132	15600	18000	28600	34400	10000	7300
	GTN04 R4	129	11.6	3530	4.8	12.0	71-80-90-100-112-132	16500	19100	30000	36100	10600	7300
	GTN04 R4	148	10.1	3440	4.1	12.0	71-80-90-100-112-132	17300	20000	31300	37600	11100	7300
	GTN04 R4	158	9.5	3550	4.0	12.0	71-80-90-100-112-132	17700	20400	31900	38400	11300	7300
	GTN04 R4	185	8.1	3460	3.3	12.0	71-80-90-100-112-132	18600	21500	33400	40200	11900	7300
	GTN04 R4	214	7.0	3620	3.0	12.0	71-80-90-100-112-132	19600	22600	34900	42000	12500	7300
	GTN04 R4	227	6.6	3480	2.7	12.0	71-80-90-100-112-132	19900	23000	35500	42700	12800	7300
	GTN04 R4	267	5.6	3660	2.4	12.0	71-80-90-100-112-132	21100	24300	37300	44900	13500	7300
	GTN04 R4	290	5.2	3680	2.3	12.0	71-80-90-100-112-132	21600	25000	38300	46000	13900	7300
	GTN04 R4	307	4.9	3500	2.0	12.0	71-80-90-100-112-132	22000	25400	38900	46800	14100	7300
	GTN04 R4	338	4.4	2420	1.3	12.0	71-80-90-100-112-132	22800	26300	40000	48200	14600	7300
	GTN04 R4	364	4.1	2940	1.4	12.0	71-80-90-100-112-132	23300	26900	40900	49300	15000	7300
	GTN04 R4	414	3.6	2470	1.1	12.0	71-80-90-100-112-132	24300	28100	42500	51200	15600	7300
	GTN04 R4	452	3.3	3690	1.4	12.0	71-80-90-100-112-132	25100	28900	43700	52600	16100	7300
	GTN04 R4	560	2.7	2540	0.81	12.0	71-80-90-100-112-132	26900	31100	46600	56100	17300	7300
	GTN04 R4	699	2.1	2630	0.67	12.0	71-80-90-100-112-132	29000	33500	49800	59900	18600	7300
1000	GTN04 R2	9.23	108	1890	23	21.6	71-80-90-100-112-132	7850	9060	15400	18500	5030	6600
	GTN04 R2	10.9	92	2240	23	21.6	71-80-90-100-112-132	8290	9570	16100	19400	5320	6600
	GTN04 R2	13.7	73	2690	22	21.6	71-80-90-100-112-132	8940	10300	17300	20800	5740	6600
	GTN04 R2	16.8	59	2390	15.8	21.6	71-80-90-100-112-132	9590	11100	18400	22100	6150	6600
	GTN04 R3	25.7	39	3130	14.0	16.8	71-80-90-100-112-132	11000	12700	20900	25100	7080	7300
	GTN04 R3	31.5	32	3180	11.6	16.8	71-80-90-100-112-132	11800	13600	22200	26700	7580	7300
	GTN04 R3	37.1	26.9	3470	10.7	16.8	71-80-90-100-112-132	12500	14400	23300	28100	8010	7300
	GTN04 R3	42.6	23.5	3270	8.8	16.8	71-80-90-100-112-132	13100	15100	24300	29200	8380	7300
	GTN04 R3	46.6	21.5	2850	7.0	16.8	71-80-90-100-112-132	13500	15500	25000	30000	8640	7300
	GTN04 R3	50.3	19.9	3490	8.0	16.8	71-80-90-100-112-132	13800	15900	25500	30700	8860	7300
	GTN04 R3	63.1	15.9	2850	5.2	16.8	71-80-90-100-112-132	14900	17200	27300	32900	9550	7300
	GTN04 R3	78.7	12.7	2850	4.2	16.8	71-80-90-100-112-132	16000	18500	29200	35100	10300	7300
	GTN04 R3	97.0	10.3	2390	2.8	16.8	71-80-90-100-112-132	17200	19800	31100	37400	11000	7300
	GTN04 R3	121	8.2	2390	2.3	16.8	71-80-90-100-112-132	18500	21400	33300	40000	11900	7300
	GTN04 R4	89.4	11.2	3420	4.5	14.4	71-80-90-100-112-132	16700	19300	30300	36500	10700	7300
	GTN04 R4	109	9.1	3450	3.7	14.4	71-80-90-100-112-132	17900	20700	32300	38800	11500	7300
	GTN04 R4	129	7.7	3590	3.3	14.4	71-80-90-100-112-132	18900	21800	33900	40800	12100	7300
	GTN04 R4	148	6.7	3470	2.8	14.4	71-80-90-100-112-132	19800	22900	35300	42500	12700	7300
	GTN04 R4	158	6.3	3640	2.7	14.4	71-80-90-100-112-132	20200	23400	36000	43300	13000	7300
	GTN04 R4	185	5.4	3490	2.2	14.4	71-80-90-100-112-132	21300	24600	37700	45400	13700	7300
	GTN04 R4	214	4.7	3700	2.0	14.4	71-80-90-100-112-132	22400	25800	39500	47500	14400	7300
	GTN04 R4	227	4.4	3500	1.8	14.4	71-80-90-100-112-132	22800	26300	40100	48300	14600	7300
	GTN04 R4	267	3.7	3720	1.6	14.4	71-80-90-100-112-132	24100	27800	42200	50700	15500	7300
	GTN04 R4	290	3.4	3720	1.5	14.4	71-80-90-100-112-132	24800	28600	43200	52000	15900	7300
	GTN04 R4	307	3.3	3510	1.4	14.4	71-80-90-100-112-132	25200	29100	43900	52800	16200	7300
	GTN04 R4	338	3.0	2520	0.88	14.4	71-80-90-100-112-132	26000	30100	45200	54400	16700	7300
	GTN04 R4	364	2.7	3140	1.0	14.4	71-80-90-100-112-132	26700	30800	46200	55600	17100	7300
	GTN04 R4	414	2.4	2580	0.74	14.4	71-80-90-100-112-132	27900	32200	48100	57800	17900	7300
	GTN04 R4	452	2.2	3740	0.98	14.4	71-80-90-100-112-132	28700	33100	49300	59400	18400	7300
	GTN04 R4	560	1.8	2720	0.57	14.4	71-80-90-100-112-132	30800	35600	52600	63300	19800	7300
	GTN04 R4	699	1.4	2830	0.48	14.4	71-80-90-100-112-132	33200	38300	56300	67700	21300	7300

B

GTN04 R — 3960 Nm

n_1 min^{-1}		i	n_2 min^{-1}	M_{n2} Nm	P_{n1} kW	Pt kW	P (IEC)	Rn_2 [N] LK	LS	HK/MK	HS/MS	LSH	$M_{2\,max}$ Nm
500	GTN04 R2	9.23	54	2330	14.1	36	71-80-90-100-112-132	9890	11400	18900	22700	6340	6600
	GTN04 R2	10.9	46	2720	13.9	36	71-80-90-100-112-132	10400	12100	19900	23900	6700	6600
	GTN04 R2	13.7	37	2850	11.6	36	71-80-90-100-112-132	11300	13000	21300	25600	7230	6600
	GTN04 R2	16.8	29.7	2390	7.9	36	71-80-90-100-112-132	12100	13900	22600	27200	7750	6600
	GTN04 R3	25.7	19.5	3290	7.3	28	71-80-90-100-112-132	13900	16100	25700	30900	8920	7300
	GTN04 R3	31.5	15.9	3330	6.1	28	71-80-90-100-112-132	14900	17200	27300	32900	9550	7300
	GTN04 R3	37.1	13.5	3520	5.4	28	71-80-90-100-112-132	15700	18200	28700	34500	10100	7300
	GTN04 R3	42.6	11.7	3410	4.6	28	71-80-90-100-112-132	16500	19000	29900	36000	10600	7300
	GTN04 R3	46.6	10.7	2850	3.5	28	71-80-90-100-112-132	17000	19600	30700	37000	10900	7300
	GTN04 R3	50.3	9.9	3540	4.0	28	71-80-90-100-112-132	17400	20100	31400	37800	11200	7300
	GTN04 R3	63.1	7.9	2850	2.6	28	71-80-90-100-112-132	18800	21700	33700	40500	12000	7300
	GTN04 R3	78.7	6.4	2850	2.1	28	71-80-90-100-112-132	20200	23300	36000	43300	13000	7300
	GTN04 R3	97.0	5.2	2390	1.4	28	71-80-90-100-112-132	21700	25000	38300	46100	13900	7300
	GTN04 R3	121	4.1	2440	1.2	28	71-80-90-100-112-132	23300	26900	40900	49300	15000	7300
	GTN04 R4	89.4	5.6	3490	2.3	24	71-80-90-100-112-132	21100	24300	37400	45000	13500	7300
	GTN04 R4	109	4.6	3500	1.9	24	71-80-90-100-112-132	22500	26000	39700	47800	14500	7300
	GTN04 R4	129	3.9	3710	1.7	24	71-80-90-100-112-132	23800	27500	41700	50200	15300	7300
	GTN04 R4	148	3.4	3510	1.4	24	71-80-90-100-112-132	24900	28800	43500	52300	16000	7300
	GTN04 R4	158	3.2	3730	1.4	24	71-80-90-100-112-132	25500	29400	44400	53400	16400	7300
	GTN04 R4	185	2.7	3520	1.1	24	71-80-90-100-112-132	26900	31000	46500	55900	17200	7300
	GTN04 R4	214	2.3	3770	1.0	24	71-80-90-100-112-132	28200	32600	48600	58400	18100	7300
	GTN04 R4	227	2.2	3550	0.93	24	71-80-90-100-112-132	28700	33200	49400	59400	18400	7300
	GTN04 R4	267	1.9	3820	0.84	24	71-80-90-100-112-132	30400	35100	51900	62500	19500	7300
	GTN04 R4	290	1.7	3830	0.78	24	71-80-90-100-112-132	31200	36000	53200	64000	20000	7300
	GTN04 R4	307	1.6	3610	0.70	24	71-80-90-100-112-132	31800	36700	54100	65100	20400	7300
	GTN04 R4	338	1.5	2810	0.49	24	71-80-90-100-112-132	32800	37900	55700	67000	21100	7300
	GTN04 R4	364	1.4	3540	0.58	24	71-80-90-100-112-132	33700	38800	56900	68500	21600	7300
	GTN04 R4	414	1.2	2910	0.42	24	71-80-90-100-112-132	35100	40500	59200	71200	22500	7300
	GTN04 R4	452	1.1	3930	0.51	24	71-80-90-100-112-132	36000	41700	60700	73100	23200	7300
	GTN04 R4	560	0.89	3010	0.32	24	71-80-90-100-112-132	36000	42000	64000	74000	24000	7300
	GTN04 R4	699	0.71	3010	0.25	24	71-80-90-100-112-132	36000	42000	64000	74000	24000	7300

GTN05 R — 5600 Nm

n_1 min^{-1}		i	n_2 min^{-1}	M_{n2} Nm	P_{n1} kW	Pt kW	P (IEC)	Rn_2 [N] LK	LS	HK/MK	HS/MS	LSH	$M_{2\,max}$ Nm
1500	GTN05 R2	9.23	163	1680	30	18.0	71-80-90-100-112-132	6850	7910	13600	16400	4400	7700
	GTN05 R2	10.9	138	1980	30	18.0	71-80-90-100-112-132	7240	8360	14300	17200	4650	7700
	GTN05 R2	13.7	110	2490	30	18.0	71-80-90-100-112-132	7810	9020	15300	18400	5010	7700
	GTN05 R2	15.9	94	2890	30	18.0	71-80-90-100-112-132	8220	9480	16000	19300	5270	7700
	GTN05 R2	19.2	78	2860	25	18.0	71-80-90-100-112-132	8750	10100	16900	20400	5620	7700
	GTN05 R3	25.7	58	3630	15.0	14.0	71-80-90-100-112-132	9640	11100	18500	22200	6190	8800
	GTN05 R3	31.5	48	3770	15.0	14.0	71-80-90-100-112-132	10300	11900	19600	23600	6620	8800
	GTN05 R3	37.1	40	4340	15.0	14.0	71-80-90-100-112-132	10900	12600	20600	24800	7000	8800
	GTN05 R3	42.6	35	3790	15.0	14.0	71-80-90-100-112-132	11400	13200	21500	25900	7320	8800
	GTN05 R3	46.6	32	4310	15.0	14.0	71-80-90-100-112-132	11800	13600	22100	26600	7550	8800
	GTN05 R3	50.3	29.8	4410	15.0	14.0	71-80-90-100-112-132	12100	13900	22600	27200	7740	8800
	GTN05 R3	54.2	27.7	3570	11.3	14.0	71-80-90-100-112-132	12400	14300	23100	27800	7930	8800
	GTN05 R3	63.1	23.8	4330	11.8	14.0	71-80-90-100-112-132	13000	15000	24200	29100	8350	8800
	GTN05 R3	73.3	20.5	3580	8.4	14.0	71-80-90-100-112-132	13700	15800	25300	30500	8780	8800
	GTN05 R3	78.7	19.1	4350	9.5	14.0	71-80-90-100-112-132	14000	16200	25900	31100	8990	8800
	GTN05 R3	91.5	16.4	3580	6.7	14.0	71-80-90-100-112-132	14700	17000	27100	32600	9450	8800
	GTN05 R3	114	13.1	3580	5.4	14.0	71-80-90-100-112-132	15900	18300	28900	34800	10200	8800
	GTN05 R4	129	11.6	5200	7.1	12.0	71-80-90-100-112-132	16500	19100	30000	36100	10600	8800
	GTN05 R4	148	10.1	4480	5.4	12.0	71-80-90-100-112-132	17300	20000	31300	37600	11100	8800
	GTN05 R4	158	9.5	5310	6.0	12.0	71-80-90-100-112-132	17700	20400	31900	38400	11300	8800
	GTN05 R4	185	8.1	4490	4.3	12.0	71-80-90-100-112-132	18600	21500	33400	40200	11900	8800
	GTN05 R4	214	7.0	5390	4.5	12.0	71-80-90-100-112-132	19600	22600	34900	42000	12500	8800
	GTN05 R4	231	6.5	3600	2.8	12.0	71-80-90-100-112-132	20100	23100	35700	43000	12900	8800

B

GTN05 R

5600 Nm

n_1 min^{-1}		i	n_2 min^{-1}	M_{n2} Nm	P_{n1} kW	Pt kW	P (IEC) -	Rn_2 [N] LK	LS	HK/MK	HS/MS	LSH	$M_{2\,max}$ Nm
1500	GTN05 R4	255	5.9	3600	2.5	12.0	71-80-90-100-112-132	20700	23900	36800	44300	13300	8800
	GTN05 R4	290	5.2	5300	3.2	12.0	71-80-90-100-112-132	21600	25000	38300	46000	13900	8800
	GTN05 R4	313	4.8	3620	2.1	12.0	71-80-90-100-112-132	22200	25600	39100	47100	14200	8800
	GTN05 R4	336	4.5	4560	2.4	12.0	71-80-90-100-112-132	22700	26200	40000	48100	14600	8800
	GTN05 R4	364	4.1	4620	2.3	12.0	71-80-90-100-112-132	23300	26900	40900	49300	15000	8800
	GTN05 R4	390	3.8	3750	1.7	12.0	71-80-90-100-112-132	23900	27600	41800	50300	15300	8800
	GTN05 R4	452	3.3	4750	1.9	12.0	71-80-90-100-112-132	25100	28900	43700	52600	16100	8800
	GTN05 R4	528	2.8	3920	1.3	12.0	71-80-90-100-112-132	26400	30500	45800	55100	16900	8800
	GTN05 R4	567	2.6	4860	1.5	12.0	71-80-90-100-112-132	27000	31200	46800	56300	17400	8800
	GTN05 R4	659	2.3	4070	1.1	12.0	71-80-90-100-112-132	28400	32800	48900	58900	18200	8800
	GTN05 R4	797	1.9	3450	0.77	12.0	71-80-90-100-112-132	30300	35000	51800	62300	19400	8800
	GTN05 R4	824	1.8	4230	0.91	12.0	71-80-90-100-112-132	30600	35400	52300	62900	19700	8800
1000	GTN05 R2	9.23	108	1890	23	22	71-80-90-100-112-132	7850	9060	15400	18500	5030	7700
	GTN05 R2	10.9	92	2240	23	22	71-80-90-100-112-132	8290	9570	16100	19400	5320	7700
	GTN05 R2	13.7	73	2810	23	22	71-80-90-100-112-132	8940	10300	17300	20800	5740	7700
	GTN05 R2	15.9	63	3270	23	22	71-80-90-100-112-132	9400	10900	18100	21700	6030	7700
	GTN05 R2	19.2	52	2990	17.3	22	71-80-90-100-112-132	10000	11600	19100	23000	6430	7700
	GTN05 R3	25.7	39	3900	15.0	16.8	71-80-90-100-112-132	11000	12700	20900	25100	7080	8800
	GTN05 R3	31.5	32	3950	14.4	16.8	71-80-90-100-112-132	11800	13600	22200	26700	7580	8800
	GTN05 R3	37.1	26.9	4600	14.2	16.8	71-80-90-100-112-132	12500	14400	23300	28100	8010	8800
	GTN05 R3	42.6	23.5	3990	10.7	16.8	71-80-90-100-112-132	13100	15100	24300	29200	8380	8800
	GTN05 R3	46.6	21.5	4340	10.7	16.8	71-80-90-100-112-132	13500	15500	25000	30000	8640	8800
	GTN05 R3	50.3	19.9	4700	10.7	16.8	71-80-90-100-112-132	13800	15900	25500	30700	8860	8800
	GTN05 R3	54.2	18.5	3580	7.6	16.8	71-80-90-100-112-132	14200	16300	26100	31400	9080	8800
	GTN05 R3	63.1	15.9	4370	7.9	16.8	71-80-90-100-112-132	14900	17200	27300	32900	9550	8800
	GTN05 R3	73.3	13.6	3590	5.6	16.8	71-80-90-100-112-132	15700	18100	28600	34400	10000	8800
	GTN05 R3	78.7	12.7	4380	6.4	16.8	71-80-90-100-112-132	16000	18500	29200	35100	10300	8800
	GTN05 R3	91.5	10.9	3600	4.5	16.8	71-80-90-100-112-132	16900	19500	30600	36800	10800	8800
	GTN05 R3	114	8.7	3600	3.6	16.8	71-80-90-100-112-132	18200	21000	32700	39300	11700	8800
	GTN05 R4	129	7.7	5370	4.9	14.4	71-80-90-100-112-132	18900	21800	33900	40800	12100	8800
	GTN05 R4	148	6.7	4490	3.6	14.4	71-80-90-100-112-132	19800	22900	35300	42500	12700	8800
	GTN05 R4	158	6.3	5420	4.0	14.4	71-80-90-100-112-132	20200	23400	36000	43300	13000	8800
	GTN05 R4	185	5.4	4490	2.9	14.4	71-80-90-100-112-132	21300	24600	37700	45400	13700	8800
	GTN05 R4	214	4.7	5480	3.0	14.4	71-80-90-100-112-132	22400	25800	39500	47500	14400	8800
	GTN05 R4	231	4.3	3680	1.9	14.4	71-80-90-100-112-132	23000	26500	40300	48500	14700	8800
	GTN05 R4	255	3.9	3740	1.7	14.4	71-80-90-100-112-132	23700	27400	41600	50000	15200	8800
	GTN05 R4	290	3.4	5350	2.2	14.4	71-80-90-100-112-132	24800	28600	43200	52000	15900	8800
	GTN05 R4	313	3.2	3850	1.5	14.4	71-80-90-100-112-132	25400	29300	44200	53200	16300	8800
	GTN05 R4	336	3.0	4890	1.7	14.4	71-80-90-100-112-132	26000	30000	45100	54300	16700	8800
	GTN05 R4	364	2.7	4960	1.6	14.4	71-80-90-100-112-132	26700	30800	46200	55600	17100	8800
	GTN05 R4	390	2.6	3980	1.2	14.4	71-80-90-100-112-132	27300	31600	47200	56800	17500	8800
	GTN05 R4	452	2.2	4750	1.2	14.4	71-80-90-100-112-132	28700	33100	49300	59400	18400	8800
	GTN05 R4	528	1.9	4200	0.94	14.4	71-80-90-100-112-132	30200	34900	51700	62200	19400	8800
	GTN05 R4	567	1.8	5160	1.1	14.4	71-80-90-100-112-132	31000	35700	52800	63500	19900	8800
	GTN05 R4	659	1.5	4360	0.78	14.4	71-80-90-100-112-132	32600	37600	55300	66500	20900	8800
	GTN05 R4	797	1.3	3670	0.54	14.4	71-80-90-100-112-132	34700	40000	58500	70400	22300	8800
	GTN05 R4	824	1.2	4530	0.65	14.4	71-80-90-100-112-132	35100	40500	59100	71100	22500	8800
500	GTN05 R2	9.23	54	2330	14.1	36	71-80-90-100-112-132	9890	11400	18900	22700	6340	7700
	GTN05 R2	10.9	46	2750	14.0	36	71-80-90-100-112-132	10400	12100	19900	23900	6700	7700
	GTN05 R2	13.7	37	3340	13.6	36	71-80-90-100-112-132	11300	13000	21300	25600	7230	7700
	GTN05 R2	15.9	31	3530	12.4	36	71-80-90-100-112-132	11800	13700	22300	26800	7600	7700
	GTN05 R2	19.2	26.0	3040	8.8	36	71-80-90-100-112-132	12600	14600	23600	28300	8100	7700
	GTN05 R3	25.7	19.5	4190	9.4	28	71-80-90-100-112-132	13900	16100	25700	30900	8920	8800
	GTN05 R3	31.5	15.9	4260	7.8	28	71-80-90-100-112-132	14900	17200	27300	32900	9550	8800
	GTN05 R3	37.1	13.5	5080	7.8	28	71-80-90-100-112-132	15700	18200	28700	34500	10100	8800
	GTN05 R3	42.6	11.7	4340	5.9	28	71-80-90-100-112-132	16500	19000	29900	36000	10600	8800
	GTN05 R3	46.6	10.7	4390	5.4	28	71-80-90-100-112-132	17000	19600	30700	37000	10900	8800
	GTN05 R3	50.3	9.9	5230	6.0	28	71-80-90-100-112-132	17400	20100	31400	37800	11200	8800
	GTN05 R3	54.2	9.2	3600	3.8	28	71-80-90-100-112-132	17800	20600	32200	38700	11400	8800
	GTN05 R3	63.1	7.9	4420	4.0	28	71-80-90-100-112-132	18800	21700	33700	40500	12000	8800
	GTN05 R3	73.3	6.8	3600	2.8	28	71-80-90-100-112-132	19700	22800	35200	42400	12700	8800
	GTN05 R3	78.7	6.4	4450	3.2	28	71-80-90-100-112-132	20200	23300	36000	43300	13000	8800

B

GTN05 R — 5600 Nm

n_1 min^{-1}		i	n_2 min^{-1}	M_{n2} Nm	P_{n1} kW	Pt kW	P (IEC)	Rn_2 [N] LK	LS	HK/MK	HS/MS	LSH	$M_{2\,max}$ Nm
500	GTN05 R3	91.5	5.5	3600	2.3	28	71-80-90-100-112-132	21200	24500	37600	45300	13600	8800
	GTN05 R3	114	4.4	3670	1.8	28	71-80-90-100-112-132	22900	26400	40200	48400	14700	8800
	GTN05 R4	129	3.9	5480	2.5	24	71-80-90-100-112-132	23800	27500	41700	50200	15300	8800
	GTN05 R4	148	3.4	4490	1.8	24	71-80-90-100-112-132	24900	28800	43500	52300	16000	8800
	GTN05 R4	158	3.2	5490	2.1	24	71-80-90-100-112-132	25500	29400	44400	53400	16400	8800
	GTN05 R4	185	2.7	4490	1.4	24	71-80-90-100-112-132	26900	31000	46500	55900	17200	8800
	GTN05 R4	214	2.3	5520	1.5	24	71-80-90-100-112-132	28200	32600	48600	58400	18100	8800
	GTN05 R4	231	2.2	4100	1.1	24	71-80-90-100-112-132	28900	33400	49700	59800	18600	8800
	GTN05 R4	255	2.0	4170	0.97	24	71-80-90-100-112-132	29900	34500	51200	61600	19200	8800
	GTN05 R4	290	1.7	5450	1.1	24	71-80-90-100-112-132	31200	36000	53200	64000	20000	8800
	GTN05 R4	313	1.6	4320	0.82	24	71-80-90-100-112-132	32000	36900	54400	65400	20500	8800
	GTN05 R4	336	1.5	5350	0.94	24	71-80-90-100-112-132	32800	37800	55600	66900	21000	8800
	GTN05 R4	364	1.4	5400	0.88	24	71-80-90-100-112-132	33700	38800	56900	68500	21600	8800
	GTN05 R4	390	1.3	4490	0.68	24	71-80-90-100-112-132	34400	39800	58100	69900	22100	8800
	GTN05 R4	452	1.1	4750	0.62	24	71-80-90-100-112-132	36000	41700	60700	73100	23200	8800
	GTN05 R4	528	0.95	4690	0.53	24	71-80-90-100-112-132	36000	42000	63700	74000	24000	8800
	GTN05 R4	567	0.88	5600	0.58	24	71-80-90-100-112-132	36000	42000	64000	74000	24000	8800
	GTN05 R4	659	0.76	4690	0.42	24	71-80-90-100-112-132	36000	42000	64000	74000	24000	8800
	GTN05 R4	797	0.63	3800	0.28	24	71-80-90-100-112-132	36000	42000	64000	74000	24000	8800
	GTN05 R4	824	0.61	4690	0.34	24	71-80-90-100-112-132	36000	42000	64000	74000	24000	8800

B

GTN06 R — 7300 Nm

n_1 min^{-1}		i	n_2 min^{-1}	M_{n2} Nm	P_{n1} kW	Pt kW	P (IEC)	Rn_2 [N] LK	LS	HK/MK	HS/MS	LSH	$M_{2\,max}$ Nm
1500	GTN06 R2	9.23	163	1680	30	18.0	71-80-90-100-112-132-160	8540	9670	22200	25900	6410	12000
	GTN06 R2	10.9	138	1980	30	18.0	71-80-90-100-112-132-160	9020	10200	23400	27200	6780	12000
	GTN06 R2	13.7	110	2490	30	18.0	71-80-90-100-112-132-160	9730	11000	25000	29100	7310	12000
	GTN06 R2	15.9	94	2890	30	18.0	71-80-90-100-112-132-160	10200	11600	26200	30500	7690	12000
	GTN06 R2	19.2	78	3490	30	18.0	71-80-90-100-112-132-160	10900	12400	27700	32300	8190	12000
	GTN06 R3	33.2	45	5810	30	14.0	71-80-90-100-112-132-160	13100	14800	32700	38000	9830	14900
	GTN06 R3	39.2	38	6550	29	14.0	71-80-90-100-112-132-160	13800	15700	34300	40000	10400	14900
	GTN06 R3	46.3	32	7510	28	14.0	71-80-90-100-112-132-160	14600	16600	36100	42000	11000	14900
	GTN06 R3	58.1	25.8	7580	22	14.0	71-80-90-100-112-132-160	15800	17900	38600	45000	11800	14900
	GTN06 R3	67.5	22.2	7090	18.1	14.0	71-80-90-100-112-132-160	16600	18800	40400	47100	12500	14900
	GTN06 R3	72.9	20.6	7420	17.5	14.0	71-80-90-100-112-132-160	17000	19300	41300	48100	12800	14900
	GTN06 R3	84.7	17.7	7530	15.3	14.0	71-80-90-100-112-132-160	17900	20300	43300	50400	13400	14900
	GTN06 R3	98.5	15.2	6490	11.3	14.0	71-80-90-100-112-132-160	18800	21300	45300	52700	14100	14900
	GTN06 R3	119	12.6	6490	9.4	14.0	71-80-90-100-112-132-160	20000	22700	47900	55800	15000	14900
	GTN06 R3	144	10.4	5490	6.6	14.0	71-80-90-100-112-132-160	21300	24200	50700	59100	16000	14900
	GTN06 R4	158	9.5	9620	10.8	12.0	71-80-90-100-112-132-160	22000	24900	52100	60700	16500	14900
	GTN06 R4	168	8.9	7560	8.0	12.0	71-80-90-100-112-132-160	22400	25400	53100	61800	16900	14900
	GTN06 R4	181	8.3	9450	9.3	12.0	71-80-90-100-112-132-160	23000	26100	54300	63200	17300	14900
	GTN06 R4	214	7.0	9730	8.1	12.0	71-80-90-100-112-132-160	24300	27600	57100	66500	18300	14900
	GTN06 R4	230	6.5	7590	5.8	12.0	71-80-90-100-112-132-160	24900	28300	58400	68000	18700	14900
	GTN06 R4	249	6.0	8200	5.9	12.0	71-80-90-100-112-132-160	25600	29000	59700	69600	19200	14900
	GTN06 R4	289	5.2	8280	5.1	12.0	71-80-90-100-112-132-160	26900	30500	62500	72800	20200	14900
	GTN06 R4	312	4.8	7590	4.3	12.0	71-80-90-100-112-132-160	27600	31300	63900	74500	20700	14900
	GTN06 R4	389	3.9	7590	3.5	12.0	71-80-90-100-112-132-160	29700	33700	68300	79600	22300	14900
	GTN06 R4	420	3.6	8790	3.7	12.0	71-80-90-100-112-132-160	30500	34500	69900	81400	22900	14900
	GTN06 R4	455	3.3	7020	2.7	12.0	71-80-90-100-112-132-160	31300	35500	71600	83400	23500	14900
	GTN06 R4	488	3.1	9020	3.3	12.0	71-80-90-100-112-132-160	32000	36300	73200	85200	24100	14900
	GTN06 R4	550	2.7	7260	2.3	12.0	71-80-90-100-112-132-160	33300	37800	75800	88300	25100	14900
	GTN06 R4	590	2.5	8480	2.5	12.0	71-80-90-100-112-132-160	34100	38700	77400	90200	25600	14900
	GTN06 R4	665	2.3	6010	1.6	12.0	71-80-90-100-112-132-160	35500	40300	80300	93500	26700	14900
	GTN06 R4	830	1.8	6270	1.3	12.0	71-80-90-100-112-132-160	38300	43300	85800	99900	28700	14900
1000	GTN06 R2	9.23	108	1890	23	22	71-80-90-100-112-132-160	9770	11100	25100	29200	7340	12000
	GTN06 R2	10.9	92	2240	23	22	71-80-90-100-112-132-160	10300	11700	26400	30700	7760	12000
	GTN06 R2	13.7	73	2810	23	22	71-80-90-100-112-132-160	11100	12600	28300	32900	8370	12000

GTN06 R

7300 Nm

n_1 min^{-1}		i	n_2 min^{-1}	M_{n2} Nm	P_{n1} kW	Pt kW	P (IEC)	Rn_2 [N] LK	LS	HK/MK	HS/MS	LSH	$M_{2\,max}$ Nm
1000	GTN06 R2	15.9	63	3270	23	22	71-80-90-100-112-132-160	11700	13300	29600	34400	8800	12000
	GTN06 R2	19.2	52	3940	23	22	71-80-90-100-112-132-160	12500	14100	31300	36500	9380	12000
	GTN06 R3	33.2	30	6330	22	16.8	71-80-90-100-112-132-160	15000	17000	36900	43000	11300	14900
	GTN06 R3	39.2	25.5	7280	21	16.8	71-80-90-100-112-132-160	15800	17900	38800	45100	11900	14900
	GTN06 R3	46.3	21.6	8170	20	16.8	71-80-90-100-112-132-160	16700	19000	40800	47500	12600	14900
	GTN06 R3	58.1	17.2	8200	16.2	16.8	71-80-90-100-112-132-160	18000	20400	43600	50800	13600	14900
	GTN06 R3	67.5	14.8	7340	12.5	16.8	71-80-90-100-112-132-160	19000	21500	45600	53100	14300	14900
	GTN06 R3	72.9	13.7	7710	12.1	16.8	71-80-90-100-112-132-160	19500	22000	46700	54400	14600	14900
	GTN06 R3	84.7	11.8	7820	10.6	16.8	71-80-90-100-112-132-160	20500	23200	48900	56900	15400	14900
	GTN06 R3	98.5	10.2	6500	7.6	16.8	71-80-90-100-112-132-160	21500	24400	51100	59500	16200	14900
	GTN06 R3	119	8.4	6510	6.3	16.8	71-80-90-100-112-132-160	22900	26000	54100	63000	17200	14900
	GTN06 R3	144	6.9	5500	4.4	16.8	71-80-90-100-112-132-160	24400	27700	57300	66700	18400	14900
	GTN06 R4	158	6.3	9760	7.3	14.4	71-80-90-100-112-132-160	25200	28500	58900	68600	18900	14900
	GTN06 R4	168	6.0	7660	5.4	14.4	71-80-90-100-112-132-160	25700	29100	60000	69800	19300	14900
	GTN06 R4	181	5.5	9450	6.2	14.4	71-80-90-100-112-132-160	26400	29900	61300	71400	19800	14900
	GTN06 R4	214	4.7	9850	5.5	14.4	71-80-90-100-112-132-160	27800	31600	64500	75100	20900	14900
	GTN06 R4	230	4.3	7590	3.9	14.4	71-80-90-100-112-132-160	28600	32400	65900	76800	21500	14900
	GTN06 R4	249	4.0	8620	4.1	14.4	71-80-90-100-112-132-160	29300	33200	67500	78600	22000	14900
	GTN06 R4	289	3.5	8840	3.6	14.4	71-80-90-100-112-132-160	30800	34900	70600	82200	23100	14900
	GTN06 R4	312	3.2	7590	2.9	14.4	71-80-90-100-112-132-160	31600	35800	72200	84100	23700	14900
	GTN06 R4	389	2.6	7590	2.3	14.4	71-80-90-100-112-132-160	34000	38500	77200	89900	25500	14900
	GTN06 R4	420	2.4	9390	2.6	14.4	71-80-90-100-112-132-160	34900	39500	79000	91900	26200	14900
	GTN06 R4	455	2.2	7530	2.0	14.4	71-80-90-100-112-132-160	35800	40600	80900	94200	26900	14900
	GTN06 R4	488	2.0	9390	2.3	14.4	71-80-90-100-112-132-160	36700	41600	82600	96200	27600	14900
	GTN06 R4	550	1.8	7740	1.7	14.4	71-80-90-100-112-132-160	38200	43200	85600	99700	28700	14900
	GTN06 R4	590	1.7	8910	1.8	14.4	71-80-90-100-112-132-160	39100	44300	87500	101800	29400	14900
	GTN06 R4	665	1.5	6490	1.2	14.4	71-80-90-100-112-132-160	40700	46100	90700	105600	30600	14900
	GTN06 R4	830	1.2	6760	0.96	14.4	71-80-90-100-112-132-160	43800	49600	96900	112800	32900	14900
500	GTN06 R2	9.23	54	2330	14.1	36	71-80-90-100-112-132-160	12300	13900	30900	36000	9250	12000
	GTN06 R2	10.9	46	2750	14.0	36	71-80-90-100-112-132-160	13000	14700	32500	37800	9770	12000
	GTN06 R2	13.7	37	3460	14.1	36	71-80-90-100-112-132-160	14000	15900	34800	40500	10500	12000
	GTN06 R2	15.9	31	4020	14.1	36	71-80-90-100-112-132-160	14800	16700	36400	42400	11100	12000
	GTN06 R2	19.2	26.0	4510	13.1	36	71-80-90-100-112-132-160	15700	17800	38500	44900	11800	12000
	GTN06 R3	33.2	15.1	7350	12.7	28	71-80-90-100-112-132-160	18900	21400	45400	52900	14200	14900
	GTN06 R3	39.2	12.8	8730	12.8	28	71-80-90-100-112-132-160	19900	22600	47700	55600	15000	14900
	GTN06 R3	46.3	10.8	9450	11.7	28	71-80-90-100-112-132-160	21100	23900	50200	58400	15800	14900
	GTN06 R3	58.1	8.6	9100	9.0	28	71-80-90-100-112-132-160	22700	25800	53700	62500	17100	14900
	GTN06 R3	67.5	7.4	7590	6.4	28	71-80-90-100-112-132-160	23900	27100	56200	65400	18000	14900
	GTN06 R3	72.9	6.9	8140	6.4	28	71-80-90-100-112-132-160	24500	27800	57500	66900	18400	14900
	GTN06 R3	84.7	5.9	8210	5.6	28	71-80-90-100-112-132-160	25800	29200	60100	70000	19400	14900
	GTN06 R3	98.5	5.1	6530	3.8	28	71-80-90-100-112-132-160	27100	30700	62900	73300	20400	14900
	GTN06 R3	119	4.2	6730	3.2	28	71-80-90-100-112-132-160	28900	32700	66600	77600	21700	14900
	GTN06 R3	144	3.5	5710	2.3	28	71-80-90-100-112-132-160	30800	34900	70500	82100	23100	14900
	GTN06 R4	158	3.2	9850	3.7	24	71-80-90-100-112-132-160	31700	35900	72500	84400	23800	14900
	GTN06 R4	168	3.0	7700	2.7	24	71-80-90-100-112-132-160	32400	36700	73800	86000	24300	14900
	GTN06 R4	181	2.8	9450	3.1	24	71-80-90-100-112-132-160	33200	37600	75500	87900	24900	14900
	GTN06 R4	214	2.3	9890	2.7	24	71-80-90-100-112-132-160	35100	39800	79400	92400	26400	14900
	GTN06 R4	230	2.2	7640	2.0	24	71-80-90-100-112-132-160	36000	40800	81200	94500	27000	14900
	GTN06 R4	249	2.0	9520	2.3	24	71-80-90-100-112-132-160	36900	41800	83100	96700	27700	14900
	GTN06 R4	289	1.7	9430	1.9	24	71-80-90-100-112-132-160	38800	44000	86900	101200	29200	14900
	GTN06 R4	312	1.6	7730	1.5	24	71-80-90-100-112-132-160	39800	45100	88900	103500	29900	14900
	GTN06 R4	389	1.3	8240	1.3	24	71-80-90-100-112-132-160	42800	48500	95000	110600	32200	14900
	GTN06 R4	420	1.2	9940	1.4	24	71-80-90-100-112-132-160	44000	49800	97200	113200	33000	14900
	GTN06 R4	455	1.1	8490	1.1	24	71-80-90-100-112-132-160	45000	51000	99600	115900	33900	14900
	GTN06 R4	488	1.0	9530	1.2	24	71-80-90-100-112-132-160	45000	51000	101000	118400	34700	14900
	GTN06 R4	550	0.91	8500	0.91	24	71-80-90-100-112-132-160	45000	51000	101000	119000	35000	14900
	GTN06 R4	590	0.85	9500	0.95	24	71-80-90-100-112-132-160	45000	51000	101000	119000	35000	14900
	GTN06 R4	665	0.75	7000	0.62	24	71-80-90-100-112-132-160	45000	51000	101000	119000	35000	14900
	GTN06 R4	830	0.60	7000	0.50	24	71-80-90-100-112-132-160	45000	51000	101000	119000	35000	14900

B

GTN07 R

14000 Nm

n_1 min^{-1}		i	n_2 min^{-1}	M_{n2} Nm	P_{n1} kW	Pt kW	P (IEC)	Rn_2 [N] LK	LS	HK/MK	HS/MS	LSH	$M_{2\,max}$ Nm
1500	GTN07 R2	13.0	116	5110	66	35	132-160-180-200	10600	13300	26500	34700	9230	18600
	GTN07 R2	15.5	97	6090	66	35	132-160-180-200	11300	14100	27900	36600	9790	21000
	GTN07 R2	19.8	76	7820	66	35	132-160-180-200	12200	15400	30100	39400	10600	21000
	GTN07 R2	23.5	64	7970	57	35	132-160-180-200	13000	16300	31700	41500	11300	21000
	GTN07 R3	31.6	47	5570	30	22	71-80-90-100-112-132-160	14300	17900	34600	45400	12400	18600
	GTN07 R3	37.7	40	6650	30	22	71-80-90-100-112-132-160	15200	19000	36500	47800	13200	21000
	GTN07 R3	44.6	34	7860	30	22	71-80-90-100-112-132-160	16000	20100	38400	50300	13900	21000
	GTN07 R3	55.9	26.8	9860	30	22	71-80-90-100-112-132-160	17300	21700	41100	53800	15000	21000
	GTN07 R3	65.0	23.1	11000	29	22	71-80-90-100-112-132-160	18200	22800	43000	56300	15800	21000
	GTN07 R3	71.8	20.9	10100	24	22	71-80-90-100-112-132-160	18800	23600	44300	58000	16300	21000
	GTN07 R3	78.6	19.1	11100	24	22	71-80-90-100-112-132-160	19400	24300	45500	59600	16800	21000
	GTN07 R3	83.4	18.0	10200	21	22	71-80-90-100-112-132-160	19800	24800	46300	60700	17200	21000
	GTN07 R3	99.0	15.2	8580	14.9	22	71-80-90-100-112-132-160	20900	26200	48800	63900	18200	21000
	GTN07 R3	120	12.5	8630	12.4	22	71-80-90-100-112-132-160	22300	28000	51600	67600	19400	21000
	GTN07 R4	152	9.9	13500	15.0	15.0	71-80-90-100-112-132-160	24100	30300	55400	72700	21000	21000
	GTN07 R4	165	9.1	10900	11.7	15.0	71-80-90-100-112-132-160	24800	31100	56900	74500	21600	21000
	GTN07 R4	191	7.9	14000	13.0	15.0	71-80-90-100-112-132-160	26000	32700	59400	77800	22600	21000
	GTN07 R4	206	7.3	14100	12.2	15.0	71-80-90-100-112-132-160	26700	33500	60700	79600	23200	21000
	GTN07 R4	232	6.5	11100	8.5	15.0	71-80-90-100-112-132-160	27800	34900	63000	82500	24200	21000
	GTN07 R4	258	5.8	14600	10.0	15.0	71-80-90-100-112-132-160	28800	36100	65000	85200	25000	21000
	GTN07 R4	284	5.3	11300	7.0	15.0	71-80-90-100-112-132-160	29700	37300	66900	87700	25900	21000
	GTN07 R4	300	5.0	14000	8.3	15.0	71-80-90-100-112-132-160	30300	38000	68000	89100	26300	21000
	GTN07 R4	331	4.5	11500	6.2	15.0	71-80-90-100-112-132-160	31300	39300	70000	91800	27200	21000
	GTN07 R4	363	4.1	12300	6.0	15.0	71-80-90-100-112-132-160	32300	40500	72000	94300	28000	21000
	GTN07 R4	413	3.6	11900	5.1	15.0	71-80-90-100-112-132-160	33700	42300	74900	98100	29300	21000
	GTN07 R4	453	3.3	13400	5.3	15.0	71-80-90-100-112-132-160	34700	43600	76900	100800	30200	21000
	GTN07 R4	490	3.1	9330	3.4	15.0	71-80-90-100-112-132-160	35700	44700	78800	103300	31000	21000
	GTN07 R4	581	2.6	12600	3.9	15.0	71-80-90-100-112-132-160	37700	47400	82900	108700	32800	21000
	GTN07 R4	690	2.2	9800	2.5	15.0	71-80-90-100-112-132-160	40000	50100	87300	114400	34700	21000
1000	GTN07 R2	13.0	77	5770	50	42	132-160-180-200	12200	15300	29900	39200	10600	18600
	GTN07 R2	15.5	65	6880	50	42	132-160-180-200	12900	16200	31500	41300	11200	21000
	GTN07 R2	19.8	50	8830	50	42	132-160-180-200	14000	17600	34000	44500	12200	21000
	GTN07 R2	23.5	42	8290	39	42	132-160-180-200	14800	18600	35800	46900	12900	21000
	GTN07 R3	31.6	32	6180	22	26	71-80-90-100-112-132-160	16400	20500	39100	51200	14200	18600
	GTN07 R3	37.7	26.5	7510	23	26	71-80-90-100-112-132-160	17400	21800	41200	54000	15100	21000
	GTN07 R3	44.6	22.4	8870	23	26	71-80-90-100-112-132-160	18400	23000	43300	56800	16000	21000
	GTN07 R3	55.9	17.9	11100	23	26	71-80-90-100-112-132-160	19800	24800	46400	60800	17200	21000
	GTN07 R3	65.0	15.4	12200	21	26	71-80-90-100-112-132-160	20800	26100	48500	63600	18100	21000
	GTN07 R3	71.8	13.9	10500	16.7	26	71-80-90-100-112-132-160	21500	27000	50000	65500	18700	21000
	GTN07 R3	78.6	12.7	11800	17.3	26	71-80-90-100-112-132-160	22200	27800	51400	67300	19300	21000
	GTN07 R3	83.4	12.0	10600	14.6	26	71-80-90-100-112-132-160	22600	28400	52300	68500	19700	21000
	GTN07 R3	99.0	10.1	8700	10.1	26	71-80-90-100-112-132-160	23900	30000	55100	72200	20800	21000
	GTN07 R3	120	8.4	8700	8.3	26	71-80-90-100-112-132-160	25500	32000	58300	76400	22200	21000
	GTN07 R4												
	GTN07 R4	152	6.6	14300	11.2	18.0	71-80-90-100-112-132-160	27600	34700	62600	82100	24000	21000
	GTN07 R4	165	6.1	11200	8.0	18.0	71-80-90-100-112-132-160	28400	35600	64200	84100	24700	21000
	GTN07 R4	191	5.2	14800	9.2	18.0	71-80-90-100-112-132-160	29800	37400	67000	87800	25900	21000
	GTN07 R4	206	4.9	14900	8.6	18.0	71-80-90-100-112-132-160	30600	38300	68600	89900	26600	21000
	GTN07 R4	232	4.3	11600	5.9	18.0	71-80-90-100-112-132-160	31800	39900	71100	93200	27700	21000
	GTN07 R4	258	3.9	14900	6.8	18.0	71-80-90-100-112-132-160	33000	41400	73400	96200	28600	21000
	GTN07 R4	284	3.5	12000	5.0	18.0	71-80-90-100-112-132-160	34000	42700	75600	99000	29600	21000
	GTN07 R4	300	3.3	14000	5.5	18.0	71-80-90-100-112-132-160	34700	43500	76800	100600	30100	21000
	GTN07 R4	331	3.0	12300	4.4	18.0	71-80-90-100-112-132-160	35800	44900	79100	103700	31100	21000
	GTN07 R4	363	2.8	12300	4.0	18.0	71-80-90-100-112-132-160	36900	46300	81300	106500	32100	21000
	GTN07 R4	413	2.4	12800	3.7	18.0	71-80-90-100-112-132-160	38600	48400	84500	110800	33500	21000
	GTN07 R4	453	2.2	14000	3.6	18.0	71-80-90-100-112-132-160	39800	49900	86900	113900	34600	21000
	GTN07 R4	490	2.0	9900	2.4	18.0	71-80-90-100-112-132-160	40800	51200	89000	116600	35500	21000
	GTN07 R4	581	1.7	13300	2.7	18.0	71-80-90-100-112-132-160	43200	54200	93600	122700	37600	21000
	GTN07 R4	690	1.4	10400	1.8	18.0	71-80-90-100-112-132-160	45700	57400	98600	129200	39800	21000
500	GTN07 R2	13.0	39	6780	29	70	132-160-180-200	15300	19200	36800	48300	13300	18600
	GTN07 R2	15.5	32	7950	29	70	132-160-180-200	16200	20400	38800	50900	14100	21000
	GTN07 R2	19.8	25.2	9630	27	70	132-160-180-200	17700	22200	41900	54800	15300	21000

B

GTN07 R — 14000 Nm

n_1 min^{-1}		i	n_2 min^{-1}	M_{n2} Nm	P_{n1} kW	Pt kW	P (IEC)	Rn_2 [N] LK	LS	HK/MK	HS/MS	LSH	$M_{2\,max}$ Nm
500	GTN07 R2	23.5	21.2	8480	20	70	132-160-180-200	18700	23500	44100	57700	16200	21000
	GTN07 R3	31.6	15.8	7380	13.4	44	71-80-90-100-112-132-160	20600	25900	48100	63100	17900	18600
	GTN07 R3	37.7	13.2	9250	14.1	44	71-80-90-100-112-132-160	21900	27400	50800	66500	19000	21000
	GTN07 R3	44.6	11.2	10900	14.1	44	71-80-90-100-112-132-160	23100	29000	53400	69900	20100	21000
	GTN07 R3	55.9	8.9	13500	13.9	44	71-80-90-100-112-132-160	24900	31300	57100	74800	21700	21000
	GTN07 R3	65.0	7.7	13700	12.1	44	71-80-90-100-112-132-160	26200	32900	59800	78300	22800	21000
	GTN07 R3	71.8	7.0	11100	8.8	44	71-80-90-100-112-132-160	27100	34000	61600	80700	23600	21000
	GTN07 R3	78.6	6.4	12300	9.0	44	71-80-90-100-112-132-160	27900	35100	63300	82900	24300	21000
	GTN07 R3	83.4	6.0	11200	7.7	44	71-80-90-100-112-132-160	28500	35800	64400	84400	24800	21000
	GTN07 R3	99.0	5.1	8700	5.0	44	71-80-90-100-112-132-160	30200	37900	67800	88800	26200	21000
	GTN07 R3	120	4.2	8930	4.3	44	71-80-90-100-112-132-160	32100	40300	71800	94100	27900	21000
	GTN07 R4	152	3.3	14900	5.8	30	71-80-90-100-112-132-160	34800	43700	77100	101000	30300	21000
	GTN07 R4	165	3.0	12300	4.4	30	71-80-90-100-112-132-160	35800	44900	79100	103600	31100	21000
	GTN07 R4	191	2.6	14900	4.6	30	71-80-90-100-112-132-160	37500	47100	82500	108100	32600	21000
	GTN07 R4	206	2.4	14900	4.3	30	71-80-90-100-112-132-160	38500	48300	84400	110600	33500	21000
	GTN07 R4	232	2.2	13000	3.3	30	71-80-90-100-112-132-160	40100	50300	87600	114700	34800	21000
	GTN07 R4	258	1.9	15100	3.5	30	71-80-90-100-112-132-160	41500	52100	90400	118400	36100	21000
	GTN07 R4	284	1.8	13500	2.8	30	71-80-90-100-112-132-160	42900	53800	93100	121900	37300	21000
	GTN07 R4	300	1.7	14400	2.8	30	71-80-90-100-112-132-160	43700	54800	94500	123900	38000	21000
	GTN07 R4	331	1.5	13800	2.5	30	71-80-90-100-112-132-160	45100	56600	97400	127600	39200	21000
	GTN07 R4	363	1.4	12300	2.0	30	71-80-90-100-112-132-160	46500	58400	100100	131200	40400	21000
	GTN07 R4	413	1.2	14400	2.1	30	71-80-90-100-112-132-160	48600	61000	104100	136400	42200	21000
	GTN07 R4	453	1.1	14900	1.9	30	71-80-90-100-112-132-160	50100	62800	107000	140200	43500	21000
	GTN07 R4	490	1.0	11000	1.3	30	71-80-90-100-112-132-160	51400	64500	109000	143600	44700	21000
	GTN07 R4	581	0.86	14300	1.5	30	71-80-90-100-112-132-160	52000	65000	109000	145000	45000	21000
	GTN07 R4	690	0.72	11000	0.94	30	71-80-90-100-112-132-160	52000	65000	109000	145000	45000	21000

GTN09 R — 16460 Nm

n_1 min^{-1}		i	n_2 min^{-1}	M_{n2} Nm	P_{n1} kW	Pt kW	P (IEC)	Rn_2 [N] LK	LS	HK/MK	HS/MS	LSH	$M_{2\,max}$ Nm
1500	GTN09 R2	13.0	116	5110	66	35	132-160-180-200	—	—	26900	34700	7390	27400
	GTN09 R2	15.5	97	6090	66	35	132-160-180-200	—	—	28400	36600	7830	27400
	GTN09 R2	19.8	76	7820	66	35	132-160-180-200	—	—	30600	39400	8510	27400
	GTN09 R2	23.5	64	9280	66	35	132-160-180-200	—	—	32200	41500	9010	27400
	GTN09 R3	31.6	47	5580	30	22	71-80-90-100-112-132-160	—	—	35200	45400	9950	27900
	GTN09 R3	37.7	40	6650	30	22	71-80-90-100-112-132-160	—	—	37100	47800	10500	29000
	GTN09 R3	44.6	34	7860	30	22	71-80-90-100-112-132-160	—	—	39000	50300	11100	29000
	GTN09 R3	55.9	26.8	9860	30	22	71-80-90-100-112-132-160	—	—	41700	53800	12000	29000
	GTN09 R3	65.0	23.1	11200	30	22	71-80-90-100-112-132-160	—	—	43700	56300	12600	29000
	GTN09 R3	71.8	20.9	12700	30	22	71-80-90-100-112-132-160	—	—	45000	58000	13100	29000
	GTN09 R3	83.4	18.0	14000	29	22	71-80-90-100-112-132-160	—	—	47100	60700	13700	29000
	GTN09 R3	99.0	15.2	12800	22	22	71-80-90-100-112-132-160	—	—	49500	63900	14500	29000
	GTN09 R3	120	12.5	12900	18.6	22	71-80-90-100-112-132-160	—	—	52500	67600	15500	29000
	GTN09 R4	152	9.9	18600	15.0	15.0	71-80-90-100-112-132-160	—	—	56300	72700	16800	29000
	GTN09 R4	165	9.1	16300	15.0	15.0	71-80-90-100-112-132-160	—	—	57800	74500	17300	29000
	GTN09 R4	191	7.9	17300	15.0	15.0	71-80-90-100-112-132-160	—	—	60300	77800	18100	29000
	GTN09 R4	206	7.3	19800	15.0	15.0	71-80-90-100-112-132-160	—	—	61700	79600	18600	29000
	GTN09 R4	232	6.5	16700	12.7	15.0	71-80-90-100-112-132-160	—	—	64000	82500	19300	29000
	GTN09 R4	258	5.8	17400	12.0	15.0	71-80-90-100-112-132-160	—	—	66000	85200	20000	29000
	GTN09 R4	284	5.3	16900	10.5	15.0	71-80-90-100-112-132-160	—	—	68000	87700	20700	29000
	GTN09 R4	331	4.5	17200	9.2	15.0	71-80-90-100-112-132-160	—	—	71200	91800	21800	29000
	GTN09 R4	374	4.0	14300	6.8	15.0	71-80-90-100-112-132-160	—	—	73800	95200	22700	29000
	GTN09 R4	413	3.6	17900	7.7	15.0	71-80-90-100-112-132-160	—	—	76100	98100	23400	29000
	GTN09 R4	457	3.3	13800	5.4	15.0	71-80-90-100-112-132-160	—	—	78400	101100	24200	29000
	GTN09 R4	490	3.1	14000	5.1	15.0	71-80-90-100-112-132-160	—	—	80100	103300	24800	29000
	GTN09 R4	581	2.6	15800	4.8	15.0	71-80-90-100-112-132-160	—	—	84300	108700	26200	29000
	GTN09 R4	690	2.2	14800	3.8	15.0	71-80-90-100-112-132-160	—	—	88700	114400	27800	29000

B

GTN09 R

16460 Nm

n_1 min^{-1}		i	n_2 min^{-1}	M_{n2} Nm	P_{n1} kW	Pt kW	P (IEC) -	Rn_2 [N] LK	LS	HK/MK	HS/MS	LSH	$M_{2\,max}$ Nm
1000	GTN09 R2	13.0	77	5770	50	42	132-160-180-200	—	—	30400	39200	8450	27400
	GTN09 R2	15.5	65	6880	50	42	132-160-180-200	—	—	32100	41300	8970	27400
	GTN09 R2	19.8	50	8830	50	42	132-160-180-200	—	—	34500	44500	9740	27400
	GTN09 R2	23.5	42	10200	48	42	132-160-180-200	—	—	36400	46900	10300	27400
	GTN09 R3	31.6	32	6300	23	26	71-80-90-100-112-132-160	—	—	39700	51200	11400	27900
	GTN09 R3	37.7	26.5	7510	23	26	71-80-90-100-112-132-160	—	—	41900	54000	12100	29000
	GTN09 R3	44.6	22.4	8870	23	26	71-80-90-100-112-132-160	—	—	44000	56800	12800	29000
	GTN09 R3	55.9	17.9	11100	23	26	71-80-90-100-112-132-160	—	—	47100	60800	13800	29000
	GTN09 R3	65.0	15.4	12500	22	26	71-80-90-100-112-132-160	—	—	49300	63600	14500	29000
	GTN09 R3	71.8	13.9	14300	23	26	71-80-90-100-112-132-160	—	—	50800	65500	15000	29000
	GTN09 R3	83.4	12.0	15500	21	26	71-80-90-100-112-132-160	—	—	53100	68500	15700	29000
	GTN09 R3	99.0	10.1	13000	15.1	26	71-80-90-100-112-132-160	—	—	56000	72200	16700	29000
	GTN09 R3	120	8.4	13000	12.5	26	71-80-90-100-112-132-160	—	—	59200	76400	17700	29000
	GTN09 R4	152	6.6	20200	15.0	18.0	71-80-90-100-112-132-160	—	—	63600	82100	19200	29000
	GTN09 R4	165	6.1	16700	12.0	18.0	71-80-90-100-112-132-160	—	—	65200	84100	19800	29000
	GTN09 R4	191	5.2	17500	10.8	18.0	71-80-90-100-112-132-160	—	—	68100	87800	20700	29000
	GTN09 R4	206	4.9	21300	12.2	18.0	71-80-90-100-112-132-160	—	—	69700	89900	21200	29000
	GTN09 R4	232	4.3	17200	8.8	18.0	71-80-90-100-112-132-160	—	—	72300	93200	22100	29000
	GTN09 R4	258	3.9	17500	8.0	18.0	71-80-90-100-112-132-160	—	—	74600	96200	22900	29000
	GTN09 R4	284	3.5	17500	7.3	18.0	71-80-90-100-112-132-160	—	—	76800	99000	23700	29000
	GTN09 R4	331	3.0	18500	6.6	18.0	71-80-90-100-112-132-160	—	—	80400	103700	24900	29000
	GTN09 R4	374	2.7	14300	4.5	18.0	71-80-90-100-112-132-160	—	—	83400	107500	25900	29000
	GTN09 R4	413	2.4	19200	5.5	18.0	71-80-90-100-112-132-160	—	—	85900	110800	26800	29000
	GTN09 R4	457	2.2	14800	3.8	18.0	71-80-90-100-112-132-160	—	—	88500	114200	27700	29000
	GTN09 R4	490	2.0	14900	3.6	18.0	71-80-90-100-112-132-160	—	—	90400	116600	28400	29000
	GTN09 R4	581	1.7	15800	3.2	18.0	71-80-90-100-112-132-160	—	—	95200	122700	30000	29000
	GTN09 R4	690	1.4	15900	2.7	18.0	71-80-90-100-112-132-160	—	—	100200	129200	31800	29000
500	GTN09 R2	13.0	39	6780	29	70	132-160-180-200	—	—	37400	48300	10700	27400
	GTN09 R2	15.5	32	7950	29	70	132-160-180-200	—	—	39500	50900	11300	27400
	GTN09 R2	19.8	25.2	10200	29	70	132-160-180-200	—	—	42500	54800	12300	27400
	GTN09 R2	23.5	21.2	11200	26	70	132-160-180-200	—	—	44800	57700	13000	27400
	GTN09 R3	31.6	15.8	7760	14.1	44	71-80-90-100-112-132-160	—	—	48900	63100	14300	27900
	GTN09 R3	37.7	13.2	9250	14.1	44	71-80-90-100-112-132-160	—	—	51600	66500	15200	29000
	GTN09 R3	44.6	11.2	10900	14.1	44	71-80-90-100-112-132-160	—	—	54200	69900	16100	29000
	GTN09 R3	55.9	8.9	13700	14.1	44	71-80-90-100-112-132-160	—	—	58000	74800	17300	29000
	GTN09 R3	65.0	7.7	14100	12.5	44	71-80-90-100-112-132-160	—	—	60700	78300	18200	29000
	GTN09 R3	71.8	7.0	16400	13.1	44	71-80-90-100-112-132-160	—	—	62500	80700	18800	29000
	GTN09 R3	83.4	6.0	16700	11.5	44	71-80-90-100-112-132-160	—	—	65400	84400	19800	29000
	GTN09 R3	99.0	5.1	13000	7.5	44	71-80-90-100-112-132-160	—	—	68900	88800	21000	29000
	GTN09 R3	120	4.2	13400	6.4	44	71-80-90-100-112-132-160	—	—	72900	94100	22400	29000
	GTN09 R4	152	3.3	21300	8.3	30	71-80-90-100-112-132-160	—	—	78300	101000	24200	29000
	GTN09 R4	165	3.0	18400	6.6	30	71-80-90-100-112-132-160	—	—	80300	103600	24900	29000
	GTN09 R4	191	2.6	17500	5.4	30	71-80-90-100-112-132-160	—	—	83900	108100	26100	29000
	GTN09 R4	206	2.4	21300	6.1	30	71-80-90-100-112-132-160	—	—	85800	110600	26800	29000
	GTN09 R4	232	2.2	18100	4.6	30	71-80-90-100-112-132-160	—	—	89000	114700	27900	29000
	GTN09 R4	258	1.9	17800	4.1	30	71-80-90-100-112-132-160	—	—	91800	118400	28900	29000
	GTN09 R4	284	1.8	18200	3.8	30	71-80-90-100-112-132-160	—	—	94500	121900	29800	29000
	GTN09 R4	331	1.5	20600	3.7	30	71-80-90-100-112-132-160	—	—	99000	127600	31400	29000
	GTN09 R4	374	1.3	14600	2.3	30	71-80-90-100-112-132-160	—	—	102700	132400	32700	29000
	GTN09 R4	413	1.2	21300	3.1	30	71-80-90-100-112-132-160	—	—	105800	136400	33800	29000
	GTN09 R4	457	1.1	16700	2.2	30	71-80-90-100-112-132-160	—	—	109000	140600	34900	29000
	GTN09 R4	490	1.0	16900	2.0	30	71-80-90-100-112-132-160	—	—	110000	143600	35800	29000
	GTN09 R4	581	0.86	15800	1.6	30	71-80-90-100-112-132-160	—	—	110000	145000	36000	29000
	GTN09 R4	690	0.72	17000	1.5	30	71-80-90-100-112-132-160	—	—	110000	145000	36000	29000

B

GTN10 R

34120 Nm

n_1 min^{-1}		i	n_2 min^{-1}	M_{n2} Nm	P_{n1} kW	Pt kW	P (IEC) -	Rn_2 [N] LK	LS	HK/MK	HS/MS	LSH	$M_{2\,max}$ Nm
1500	**GTN10 R2 (B)**	**12.0**	125	10100	130	55	180-200-225	—	—	31200	39200	13000	47600
	GTN10 R2 (B)	**15.4**	97	10700	115	55	180-200-225	—	—	33600	42300	14100	47600
	GTN10 R2 (B)	**18.3**	82	11100	101	55	180-200-225	—	—	35400	44500	15000	47600
	GTN10 R2 (C)	**16.6**	90	11200	112	55	180-200-225-250	—	—	34400	43200	14500	47600
	GTN10 R2 (C)	**21.3**	70	11800	92	55	180-200-225-250	—	—	37100	46600	15800	47600
	GTN10 R2 (C)	**25.3**	59	12200	81	55	180-200-225-250	—	—	39000	49000	16700	47600
	GTN10 R3	**37.7**	40	6650	30	22	71-80-90-100-112-132-160	—	—	44000	55300	19000	47600
	GTN10 R3	**44.6**	34	7860	30	22	71-80-90-100-112-132-160	—	—	46200	58100	20100	47600
	GTN10 R3	**55.9**	26.8	9860	30	22	71-80-90-100-112-132-160	—	—	49500	62200	21700	47600
	GTN10 R3	**65.0**	23.1	11500	30	22	71-80-90-100-112-132-160	—	—	51700	65100	22800	47600
	GTN10 R3	**71.8**	20.9	12700	30	22	71-80-90-100-112-132-160	—	—	53300	67000	23600	47600
	GTN10 R3	**78.6**	19.1	13900	30	22	71-80-90-100-112-132-160	—	—	54800	68900	24300	47600
	GTN10 R3	**83.4**	18.0	14700	30	22	71-80-90-100-112-132-160	—	—	55800	70100	24800	47600
	GTN10 R3	**99.0**	15.2	16400	29	22	71-80-90-100-112-132-160	—	—	58700	73800	26300	47600
	GTN10 R3	**120**	12.5	17400	25	22	71-80-90-100-112-132-160	—	—	62200	78200	28000	47600
	GTN10 R4	**136**	11.0	21000	27	15.0	71-80-90-100-112-132-160	—	—	64600	81200	29200	47600
	GTN10 R4	**160**	9.4	22000	24	15.0	71-80-90-100-112-132-160	—	—	67800	85300	30900	47600
	GTN10 R4	**189**	7.9	23200	22	15.0	71-80-90-100-112-132-160	—	—	71300	89700	32600	47600
	GTN10 R4	**206**	7.3	22100	19.0	15.0	71-80-90-100-112-132-160	—	—	73100	91900	33500	47600
	GTN10 R4	**234**	6.4	24700	18.7	15.0	71-80-90-100-112-132-160	—	—	76000	95600	35000	47600
	GTN10 R4	**258**	5.8	22800	15.7	15.0	71-80-90-100-112-132-160	—	—	78300	98400	36200	47600
	GTN10 R4	**283**	5.3	26100	16.4	15.0	71-80-90-100-112-132-160	—	—	80500	101200	37300	47600
	GTN10 R4	**305**	4.9	23400	13.6	15.0	71-80-90-100-112-132-160	—	—	82300	103500	38200	47600
	GTN10 R4	**334**	4.5	27400	14.6	15.0	71-80-90-100-112-132-160	—	—	84600	106300	39400	47600
	GTN10 R4	**363**	4.1	24100	11.8	15.0	71-80-90-100-112-132-160	—	—	86700	109000	40500	47600
	GTN10 R4	**419**	3.6	29000	12.3	15.0	71-80-90-100-112-132-160	—	—	90500	113800	42500	47600
	GTN10 R4	**454**	3.3	20000	7.8	15.0	71-80-90-100-112-132-160	—	—	92700	116600	43600	47600
	GTN10 R4	**517**	2.9	25600	8.8	15.0	71-80-90-100-112-132-160	—	—	96400	121200	45600	47600
	GTN10 R4	**590**	2.5	21800	6.6	15.0	71-80-90-100-112-132-160	—	—	100300	126100	47600	47600
	GTN10 R4	**639**	2.3	21500	6.0	15.0	71-80-90-100-112-132-160	—	—	102700	129100	48900	47600
	GTN10 R4	**757**	2.0	26400	6.2	15.0	71-80-90-100-112-132-160	—	—	108100	135900	51700	47600
	GTN10 R4	**898**	1.7	23200	4.6	15.0	71-80-90-100-112-132-160	—	—	113800	143100	54800	47600
1000	**GTN10 R2 (B)**	**12.0**	83	11400	106	66	180-200-225	—	—	35200	44300	14900	47600
	GTN10 R2 (B)	**15.4**	65	12000	87	66	180-200-225	—	—	38000	47700	16200	47600
	GTN10 R2 (B)	**18.3**	55	12500	76	66	180-200-225	—	—	40000	50200	17100	47600
	GTN10 R2 (C)	**16.6**	60	12600	84	66	180-200-225-250	—	—	38800	48800	16600	47600
	GTN10 R2 (C)	**21.3**	47	13300	69	66	180-200-225-250	—	—	41800	52600	18000	47600
	GTN10 R2 (C)	**25.3**	39	13500	59	66	180-200-225-250	—	—	44100	55400	19100	47600
	GTN10 R3	**37.7**	26.5	7510	23	26	71-80-90-100-112-132-160	—	—	49600	62400	21800	47600
	GTN10 R3	**44.6**	22.4	8870	23	26	71-80-90-100-112-132-160	—	—	52200	65600	23000	47600
	GTN10 R3	**55.9**	17.9	11100	23	26	71-80-90-100-112-132-160	—	—	55900	70200	24900	47600
	GTN10 R3	**65.0**	15.4	12900	23	26	71-80-90-100-112-132-160	—	—	58400	73500	26100	47600
	GTN10 R3	**71.8**	13.9	14300	23	26	71-80-90-100-112-132-160	—	—	60200	75700	27000	47600
	GTN10 R3	**78.6**	12.7	15700	23	26	71-80-90-100-112-132-160	—	—	61900	77800	27800	47600
	GTN10 R3	**83.4**	12.0	16600	23	26	71-80-90-100-112-132-160	—	—	63000	79200	28400	47600
	GTN10 R3	**99.0**	10.1	18200	21	26	71-80-90-100-112-132-160	—	—	66300	83400	30100	47600
	GTN10 R3	**120**	8.4	18300	17.5	26	71-80-90-100-112-132-160	—	—	70200	88300	32000	47600
	GTN10 R4	**136**	7.4	23700	21	18.0	71-80-90-100-112-132-160	—	—	72900	91700	33400	47600
	GTN10 R4	**160**	6.2	24900	18.3	18.0	71-80-90-100-112-132-160	—	—	76600	96400	35300	47600
	GTN10 R4	**189**	5.3	26100	16.3	18.0	71-80-90-100-112-132-160	—	—	80500	101300	37300	47600
	GTN10 R4	**206**	4.9	23500	13.5	18.0	71-80-90-100-112-132-160	—	—	82600	103800	38400	47600
	GTN10 R4	**234**	4.3	27800	14.0	18.0	71-80-90-100-112-132-160	—	—	85800	107900	40100	47600
	GTN10 R4	**258**	3.9	24400	11.2	18.0	71-80-90-100-112-132-160	—	—	88400	111200	41400	47600
	GTN10 R4	**283**	3.5	29300	12.3	18.0	71-80-90-100-112-132-160	—	—	90900	114300	42700	47600
	GTN10 R4	**305**	3.3	25100	9.7	18.0	71-80-90-100-112-132-160	—	—	92900	116800	43800	47600
	GTN10 R4	**334**	3.0	30700	10.9	18.0	71-80-90-100-112-132-160	—	—	95500	120100	45100	47600
	GTN10 R4	**363**	2.8	25800	8.4	18.0	71-80-90-100-112-132-160	—	—	97900	123100	46400	47600
	GTN10 R4	**419**	2.4	32000	9.0	18.0	71-80-90-100-112-132-160	—	—	102200	128600	48700	47600
	GTN10 R4	**454**	2.2	21800	5.7	18.0	71-80-90-100-112-132-160	—	—	104700	131700	50000	47600
	GTN10 R4	**517**	1.9	27400	6.3	18.0	71-80-90-100-112-132-160	—	—	108900	136900	52200	47600
	GTN10 R4	**590**	1.7	21800	4.4	18.0	71-80-90-100-112-132-160	—	—	113200	142400	54500	47600
	GTN10 R4	**639**	1.6	23500	4.4	18.0	71-80-90-100-112-132-160	—	—	116000	145800	56000	47600

B

GTN10 R — 34120 Nm

n_1 min^{-1}		i	n_2 min^{-1}	M_{n2} Nm	P_{n1} kW	Pt kW	P (IEC)	Rn_2 [N] LK	LS	HK/MK	HS/MS	LSH	$M_{2\,max}$ Nm
1000	GTN10 R4	757	1.3	27300	4.3	18.0	71-80-90-100-112-132-160	—	—	122000	153500	59200	47600
	GTN10 R4	898	1.1	25400	3.3	18.0	71-80-90-100-112-132-160	—	—	128500	161600	62700	47600
500	GTN10 R2 (B)	12.0	42	14100	65	110	180-200-225	—	—	43400	54500	18800	47600
	GTN10 R2 (B)	15.4	32	14800	53	110	180-200-225	—	—	46700	58800	20400	47600
	GTN10 R2 (B)	18.3	27.3	14700	45	110	180-200-225	—	—	49200	61900	21600	47600
	GTN10 R2 (C)	16.6	30	15500	52	110	180-200-225-250	—	—	47800	60100	20900	47600
	GTN10 R2 (C)	21.3	23.4	16300	43	110	180-200-225-250	—	—	51500	64800	22700	47600
	GTN10 R2 (C)	25.3	19.7	15700	35	110	180-200-225-250	—	—	54200	68200	24100	47600
	GTN10 R3	37.7	13.2	9250	14.1	44	71-80-90-100-112-132-160	—	—	61100	76900	27500	47600
	GTN10 R3	44.6	11.2	10900	14.1	44	71-80-90-100-112-132-160	—	—	64200	80800	29000	47600
	GTN10 R3	55.9	8.9	13700	14.1	44	71-80-90-100-112-132-160	—	—	68800	86500	31300	47600
	GTN10 R3	65.0	7.7	15900	14.1	44	71-80-90-100-112-132-160	—	—	71900	90500	32900	47600
	GTN10 R3	71.8	7.0	17600	14.1	44	71-80-90-100-112-132-160	—	—	74100	93200	34000	47600
	GTN10 R3	78.6	6.4	18900	13.8	44	71-80-90-100-112-132-160	—	—	76200	95800	35100	47600
	GTN10 R3	83.4	6.0	20500	14.1	44	71-80-90-100-112-132-160	—	—	77500	97500	35800	47600
	GTN10 R3	99.0	5.1	18400	10.7	44	71-80-90-100-112-132-160	—	—	81600	102600	37900	47600
	GTN10 R3	120	4.2	19100	9.2	44	71-80-90-100-112-132-160	—	—	86400	108700	40400	47600
	GTN10 R4	136	3.7	29000	12.6	30	71-80-90-100-112-132-160	—	—	89800	112900	42100	47600
	GTN10 R4	160	3.1	30400	11.2	30	71-80-90-100-112-132-160	—	—	94300	118600	44500	47600
	GTN10 R4	189	2.6	31800	9.9	30	71-80-90-100-112-132-160	—	—	99200	124700	47000	47600
	GTN10 R4	206	2.4	26400	7.6	30	71-80-90-100-112-132-160	—	—	101700	127800	48400	47600
	GTN10 R4	234	2.1	32600	8.2	30	71-80-90-100-112-132-160	—	—	105700	132900	50500	47600
	GTN10 R4	258	1.9	27400	6.3	30	71-80-90-100-112-132-160	—	—	108800	136900	52200	47600
	GTN10 R4	283	1.8	33000	6.9	30	71-80-90-100-112-132-160	—	—	111900	140700	53800	47600
	GTN10 R4	305	1.6	28200	5.5	30	71-80-90-100-112-132-160	—	—	114400	143800	55100	47600
	GTN10 R4	334	1.5	33300	5.9	30	71-80-90-100-112-132-160	—	—	117600	147800	56800	47600
	GTN10 R4	363	1.4	29000	4.7	30	71-80-90-100-112-132-160	—	—	120600	151600	58400	47600
	GTN10 R4	419	1.2	33700	4.8	30	71-80-90-100-112-132-160	—	—	125900	158300	61300	47600
	GTN10 R4	454	1.1	25400	3.3	30	71-80-90-100-112-132-160	—	—	128900	162100	62900	47600
	GTN10 R4	517	0.97	30600	3.5	30	71-80-90-100-112-132-160	—	—	133000	166000	65000	47600
	GTN10 R4	590	0.85	21800	2.2	30	71-80-90-100-112-132-160	—	—	133000	166000	65000	47600
	GTN10 R4	639	0.78	26000	2.4	30	71-80-90-100-112-132-160	—	—	133000	166000	65000	47600
	GTN10 R4	757	0.66	28000	2.2	30	71-80-90-100-112-132-160	—	—	133000	166000	65000	47600
	GTN10 R4	898	0.56	26000	1.7	30	71-80-90-100-112-132-160	—	—	133000	166000	65000	47600

GTN11 R — 48330 Nm

n_1 min^{-1}		i	n_2 min^{-1}	M_{n2} Nm	P_{n1} kW	Pt kW	P (IEC)	Rn_2 [N] LK	LS	HK/MK	HS/MS	LSH	$M_{2\,max}$ Nm
1500	GTN11 R2 (B)	12.0	125	11900	150	75	180-200-225-250	—	—	36900	45900	13000	58300
	GTN11 R2 (B)	15.4	97	15400	150	75	180-200-225-250	—	—	39700	49500	14100	58300
	GTN11 R2 (B)	18.3	82	16000	146	75	180-200-225-250	—	—	41800	52100	15000	58300
	GTN11 R2 (C)	16.6	90	14400	144	90	180-200-225-250	—	—	40600	50600	14500	58300
	GTN11 R2 (C)	21.3	70	16900	132	90	180-200-225-250	—	—	43800	54500	15800	58300
	GTN11 R2 (C)	25.3	59	17600	116	90	180-200-225-250	—	—	46100	57400	16700	58300
	GTN11 R3	53.0	28.3	20300	66	40	132-160-180-200	—	—	57500	71600	21300	58300
	GTN11 R3	63.2	23.7	24000	65	40	132-160-180-200	—	—	60600	75500	22600	58300
	GTN11 R3	68.0	22.1	24000	61	40	132-160-180-200	—	—	62000	77200	23200	58300
	GTN11 R3	81.1	18.5	25900	55	40	132-160-180-200	—	—	65400	81400	24600	58300
	GTN11 R3	96.3	15.6	27200	49	40	132-160-180-200	—	—	68800	85700	26000	58300
	GTN11 R3	104	14.4	28700	47	40	132-160-180-200	—	—	70400	87700	26700	58300
	GTN11 R3	124	12.1	30200	42	40	132-160-180-200	—	—	74100	92400	28300	58300
	GTN11 R3	147	10.2	26900	32	40	132-160-180-200	—	—	78100	97200	29900	58300
	GTN11 R4	154	9.7	26400	30	22	71-80-90-100-112-132-160	—	—	79300	98700	30500	58300
	GTN11 R4	182	8.2	31200	30	22	71-80-90-100-112-132-160	—	—	83300	103800	32200	58300
	GTN11 R4	198	7.6	33800	30	22	71-80-90-100-112-132-160	—	—	85400	106400	33100	58300
	GTN11 R4	229	6.6	35300	27	22	71-80-90-100-112-132-160	—	—	89200	111100	34700	58300
	GTN11 R4	266	5.6	36900	25	22	71-80-90-100-112-132-160	—	—	93300	116200	36500	58300

GTN11 R — 48330 Nm

n_1 min^{-1}		i	n_2 min^{-1}	M_{n2} Nm	P_{n1} kW	Pt kW	P (IEC)	Rn_2 [N] LK	LS	HK/MK	HS/MS	LSH	$M_{2\,max}$ Nm
1500	GTN11 R4	294	5.1	38000	23	22	71-80-90-100-112-132-160	—	—	96100	119700	37700	58300
	GTN11 R4	322	4.7	39000	22	22	71-80-90-100-112-132-160	—	—	98800	123100	38900	58300
	GTN11 R4	341	4.4	39200	20	22	71-80-90-100-112-132-160	—	—	100600	125300	39700	58300
	GTN11 R4	413	3.6	40600	17.4	22	71-80-90-100-112-132-160	—	—	106500	132600	42300	58300
	GTN11 R4	438	3.4	37500	15.2	22	71-80-90-100-112-132-160	—	—	108400	135000	43100	58300
	GTN11 R4	490	3.1	34500	12.5	22	71-80-90-100-112-132-160	—	—	112100	139600	44800	58300
	GTN11 R4	520	2.9	38600	13.2	22	71-80-90-100-112-132-160	—	—	114100	142100	45700	58300
	GTN11 R4	629	2.4	39700	11.2	22	71-80-90-100-112-132-160	—	—	120800	150500	48600	58300
	GTN11 R4	746	2.0	30500	7.3	22	71-80-90-100-112-132-160	—	—	127200	158400	51500	58300
1000	GTN11 R2 (B)	12.0	83	13500	125	90	180-200-225-250	—	—	41600	51800	14900	58300
	GTN11 R2 (B)	15.4	65	17400	126	90	180-200-225-250	—	—	44900	55900	16200	58300
	GTN11 R2 (B)	18.3	55	18100	110	90	180-200-225-250	—	—	47200	58800	17100	58300
	GTN11 R2 (C)	16.6	60	16200	109	108	180-200-225-250	—	—	45900	57200	16600	58300
	GTN11 R2 (C)	21.3	47	19100	100	108	180-200-225-250	—	—	49500	61600	18000	58300
	GTN11 R2 (C)	25.3	39	19500	85	108	180-200-225-250	—	—	52100	64800	19100	58300
	GTN11 R3	53.0	18.9	22900	50	48	132-160-180-200	—	—	65000	80900	24400	58300
	GTN11 R3	63.2	15.8	27100	49	48	132-160-180-200	—	—	68500	85300	25900	58300
	GTN11 R3	68.0	14.7	27100	46	48	132-160-180-200	—	—	70000	87200	26500	58300
	GTN11 R3	81.1	12.3	29200	41	48	132-160-180-200	—	—	73800	91900	28100	58300
	GTN11 R3	96.3	10.4	30700	37	48	132-160-180-200	—	—	77700	96800	29800	58300
	GTN11 R3	104	9.6	32200	35	48	132-160-180-200	—	—	79500	99100	30600	58300
	GTN11 R3	124	8.1	33000	31	48	132-160-180-200	—	—	83700	104300	32400	58300
	GTN11 R3	147	6.8	27000	21	48	132-160-180-200	—	—	88200	109800	34300	58300
	GTN11 R4	154	6.5	29800	23	26	71-80-90-100-112-132-160	—	—	89500	111500	34900	58300
	GTN11 R4	182	5.5	35200	23	26	71-80-90-100-112-132-160	—	—	94100	117200	36900	58300
	GTN11 R4	198	5.0	38200	23	26	71-80-90-100-112-132-160	—	—	96500	120200	37900	58300
	GTN11 R4	229	4.4	39600	21	26	71-80-90-100-112-132-160	—	—	100700	125500	39800	58300
	GTN11 R4	266	3.8	41200	18.3	26	71-80-90-100-112-132-160	—	—	105400	131300	41800	58300
	GTN11 R4	294	3.4	41000	16.5	26	71-80-90-100-112-132-160	—	—	108600	135200	43200	58300
	GTN11 R4	322	3.1	43300	15.9	26	71-80-90-100-112-132-160	—	—	111600	139000	44500	58300
	GTN11 R4	341	2.9	42200	14.6	26	71-80-90-100-112-132-160	—	—	113600	141500	45400	58300
	GTN11 R4	413	2.4	43500	12.5	26	71-80-90-100-112-132-160	—	—	120200	149800	48400	58300
	GTN11 R4	438	2.3	40100	10.8	26	71-80-90-100-112-132-160	—	—	122400	152500	49400	58300
	GTN11 R4	490	2.0	34700	8.4	26	71-80-90-100-112-132-160	—	—	126600	157700	51200	58300
	GTN11 R4	520	1.9	40500	9.2	26	71-80-90-100-112-132-160	—	—	128800	160500	52300	58300
	GTN11 R4	629	1.6	41200	7.8	26	71-80-90-100-112-132-160	—	—	136400	169900	55700	58300
	GTN11 R4	746	1.3	32500	5.2	26	71-80-90-100-112-132-160	—	—	143600	178900	59000	58300
500	GTN11 R2 (B)	12.0	42	16700	77	150	180-200-225-250	—	—	51200	63800	18800	58300
	GTN11 R2 (B)	15.4	32	21400	77	150	180-200-225-250	—	—	55200	68800	20400	58300
	GTN11 R2 (B)	18.3	27.3	21400	65	150	180-200-225-250	—	—	58100	72400	21600	58300
	GTN11 R2 (C)	16.6	30	20000	67	180	180-200-225-250	—	—	56500	70400	20900	58300
	GTN11 R2 (C)	21.3	23.4	23500	61	180	180-200-225-250	—	—	60900	75800	22700	58300
	GTN11 R2 (C)	25.3	19.7	22500	49	180	180-200-225-250	—	—	64100	79800	24100	58300
	GTN11 R3	53.0	9.4	28100	30	80	132-160-180-200	—	—	80000	99600	30800	58300
	GTN11 R3	63.2	7.9	33400	30	80	132-160-180-200	—	—	84300	105000	32600	58300
	GTN11 R3	68.0	7.4	32400	27	80	132-160-180-200	—	—	86200	107400	33400	58300
	GTN11 R3	81.1	6.2	36000	25	80	132-160-180-200	—	—	90900	113200	35500	58300
	GTN11 R3	96.3	5.2	34300	20	80	132-160-180-200	—	—	95700	119200	37500	58300
	GTN11 R3	104	4.8	35500	19.5	80	132-160-180-200	—	—	97900	122000	38500	58300
	GTN11 R3	124	4.0	36500	16.9	80	132-160-180-200	—	—	103100	128400	40800	58300
	GTN11 R3	147	3.4	28400	11.1	80	132-160-180-200	—	—	108500	135200	43200	58300
	GTN11 R4	154	3.2	36700	14.1	44	71-80-90-100-112-132-160	—	—	110200	137300	43900	58300
	GTN11 R4	182	2.7	43400	14.1	44	71-80-90-100-112-132-160	—	—	115800	144300	46400	58300
	GTN11 R4	198	2.5	43300	12.9	44	71-80-90-100-112-132-160	—	—	118800	148000	47700	58300
	GTN11 R4	229	2.2	46200	11.9	44	71-80-90-100-112-132-160	—	—	124000	154500	50100	58300
	GTN11 R4	266	1.9	46600	10.4	44	71-80-90-100-112-132-160	—	—	129700	161600	52700	58300
	GTN11 R4	294	1.7	44800	9.0	44	71-80-90-100-112-132-160	—	—	133600	166500	54400	58300
	GTN11 R4	322	1.6	47100	8.7	44	71-80-90-100-112-132-160	—	—	137400	171100	56100	58300
	GTN11 R4	341	1.5	45400	7.9	44	71-80-90-100-112-132-160	—	—	139800	174200	57200	58300
	GTN11 R4	413	1.2	46200	6.6	44	71-80-90-100-112-132-160	—	—	148000	184400	61000	58300
	GTN11 R4	438	1.1	44300	6.0	44	71-80-90-100-112-132-160	—	—	150700	187700	62200	58300

B

GTN11 R — 48330 Nm

n_1 min^{-1}		i	n_2 min^{-1}	M_{n2} Nm	P_{n1} kW	Pt kW	P (IEC)	Rn_2 [N] LK	LS	HK/MK	HS/MS	LSH	$M_{2\,max}$ Nm
500	GTN11 R4	490	1.0	35200	4.2	44	71-80-90-100-112-132-160	—	—	155800	194100	64600	58300
	GTN11 R4	520	0.96	43000	4.9	44	71-80-90-100-112-132-160	—	—	157000	195000	65000	58300
	GTN11 R4	629	0.80	43000	4.0	44	71-80-90-100-112-132-160	—	—	157000	195000	65000	58300
	GTN11 R4	746	0.67	34000	2.7	44	71-80-90-100-112-132-160	—	—	157000	195000	65000	58300

GTN13 R — 57970 Nm

n_1 min^{-1}		i	n_2 min^{-1}	M_{n2} Nm	P_{n1} kW	Pt kW	P (IEC)	Rn_2 [N] LK	LS	HK/MK	HS/MS	LSH	$M_{2\,max}$ Nm
1500	GTN13 R2 (B)	12.2	123	12100	150	75	180-200-225-250	—	—	45700	54100	16100	86300
	GTN13 R2 (B)	15.9	95	15700	150	75	180-200-225-250	—	—	49500	58600	17600	86300
	GTN13 R2 (B)	19.1	79	19100	150	75	180-200-225-250	—	—	52300	61900	18700	86300
	GTN13 R2 (C)	16.8	89	14600	144	90	180-200-225-250	—	—	50400	59600	17900	105000
	GTN13 R2 (C)	22.0	68	19000	144	90	180-200-225-250	—	—	54600	64600	19600	105000
	GTN13 R2 (C)	26.4	57	22800	144	90	180-200-225-250	—	—	57700	68300	20800	105000
	GTN13 R3	53.7	28.0	20500	66	40	132-160-180-200	—	—	71300	84400	26400	105000
	GTN13 R3	64.0	23.4	24500	66	40	132-160-180-200	—	—	75200	89000	28000	105000
	GTN13 R3	69.9	21.4	26700	66	40	132-160-180-200	—	—	77200	91400	28800	105000
	GTN13 R3	82.2	18.3	31400	66	40	132-160-180-200	—	—	81100	95900	30400	105000
	GTN13 R3	97.5	15.4	37300	66	40	132-160-180-200	—	—	85300	101000	32200	105000
	GTN13 R3	107	14.0	38800	62	40	132-160-180-200	—	—	87800	103900	33200	105000
	GTN13 R3	127	11.8	40700	55	40	132-160-180-200	—	—	92400	109400	35100	105000
	GTN13 R3	153	9.8	39000	44	40	132-160-180-200	—	—	97700	115600	37400	105000
	GTN13 R4												
	GTN13 R4	185	8.1	31600	30	22	71-80-90-100-112-132-160	—	—	103300	122300	39800	105000
	GTN13 R4	201	7.5	34300	30	22	71-80-90-100-112-132-160	—	—	106000	125400	40900	105000
	GTN13 R4	237	6.3	40500	30	22	71-80-90-100-112-132-160	—	—	111400	131800	43200	105000
	GTN13 R4	281	5.3	48100	30	22	71-80-90-100-112-132-160	—	—	117200	138800	45800	105000
	GTN13 R4	309	4.9	44500	26	22	71-80-90-100-112-132-160	—	—	120600	142700	47200	105000
	GTN13 R4	346	4.3	53000	27	22	71-80-90-100-112-132-160	—	—	124700	147600	49000	105000
	GTN13 R4	387	3.9	46700	21	22	71-80-90-100-112-132-160	—	—	129100	152800	50900	105000
	GTN13 R4	450	3.3	47700	18.8	22	71-80-90-100-112-132-160	—	—	135100	159800	53600	105000
	GTN13 R4	496	3.0	52100	18.6	22	71-80-90-100-112-132-160	—	—	139000	164500	55300	105000
	GTN13 R4	535	2.8	48900	16.2	22	71-80-90-100-112-132-160	—	—	142200	168300	56700	105000
	GTN13 R4	647	2.3	50400	13.8	22	71-80-90-100-112-132-160	—	—	150500	178100	60400	105000
	GTN13 R4	778	1.9	44200	10.1	22	71-80-90-100-112-132-160	—	—	159100	188300	64300	105000
1000	GTN13 R2 (B)	12.2	82	13700	126	90	180-200-225-250	—	—	51600	61100	18400	86300
	GTN13 R2 (B)	15.9	63	17700	124	90	180-200-225-250	—	—	55900	66100	20100	86300
	GTN13 R2 (B)	19.1	52	21800	127	90	180-200-225-250	—	—	59100	69900	21400	86300
	GTN13 R2 (C)	16.8	59	16400	109	108	180-200-225-250	—	—	56900	67400	20500	105000
	GTN13 R2 (C)	22.0	46	21400	109	108	180-200-225-250	—	—	61600	72900	22400	105000
	GTN13 R2 (C)	26.4	38	25000	105	108	180-200-225-250	—	—	65100	77100	23800	105000
	GTN13 R3	53.7	18.6	23200	50	48	132-160-180-200	—	—	80600	95300	30200	105000
	GTN13 R3	64.0	15.6	27700	50	48	132-160-180-200	—	—	84900	100500	32000	105000
	GTN13 R3	69.9	14.3	30200	50	48	132-160-180-200	—	—	87200	103200	33000	105000
	GTN13 R3	82.2	12.2	35500	50	48	132-160-180-200	—	—	91500	108300	34800	105000
	GTN13 R3	97.5	10.3	42100	50	48	132-160-180-200	—	—	96400	114100	36800	105000
	GTN13 R3	107	9.3	42800	46	48	132-160-180-200	—	—	99100	117300	38000	105000
	GTN13 R3	127	7.9	43400	39	48	132-160-180-200	—	—	104400	123500	40200	105000
	GTN13 R3	153	6.5	39000	29	48	132-160-180-200	—	—	110300	130600	42800	105000
	GTN13 R4	185	5.4	35700	23	26	71-80-90-100-112-132-160	—	—	116700	138100	45500	105000
	GTN13 R4	201	5.0	38800	23	26	71-80-90-100-112-132-160	—	—	119700	141600	46800	105000
	GTN13 R4	237	4.2	45600	23	26	71-80-90-100-112-132-160	—	—	125800	148900	49500	105000
	GTN13 R4	281	3.6	49700	21	26	71-80-90-100-112-132-160	—	—	132400	156700	52400	105000
	GTN13 R4	309	3.2	47600	18.2	26	71-80-90-100-112-132-160	—	—	136200	161200	54100	105000
	GTN13 R4	346	2.9	54500	18.6	26	71-80-90-100-112-132-160	—	—	140900	166700	56100	105000
	GTN13 R4	387	2.6	49500	15.1	26	71-80-90-100-112-132-160	—	—	145800	172500	58300	105000
	GTN13 R4	450	2.2	50700	13.3	26	71-80-90-100-112-132-160	—	—	152500	180500	61300	105000
	GTN13 R4	496	2.0	52200	12.5	26	71-80-90-100-112-132-160	—	—	157000	185800	63300	105000

B

GTN13 R — 57970 Nm

n_1 min^{-1}		i	n_2 min^{-1}	M_{n2} Nm	P_{n1} kW	Pt kW	P (IEC)	Rn_2 [N] LK	LS	HK/MK	HS/MS	LSH	$M_{2\,max}$ Nm
1000	**GTN13 R4**	**535**	1.9	52200	11.6	26	71-80-90-100-112-132-160	—	—	160600	190000	64900	105000
	GTN13 R4	**647**	1.5	53900	9.9	26	71-80-90-100-112-132-160	—	—	170000	201200	69200	105000
	GTN13 R4	**778**	1.3	47100	7.2	26	71-80-90-100-112-132-160	—	—	179700	212700	73600	105000
500	**GTN13 R2 (B)**	**12.2**	41	17000	78	150	180-200-225-250	—	—	63600	75200	23200	86300
	GTN13 R2 (B)	**15.9**	32	21900	77	150	180-200-225-250	—	—	68800	81400	25300	86300
	GTN13 R2 (B)	**19.1**	26.2	26900	78	150	180-200-225-250	—	—	72700	86100	26900	86300
	GTN13 R2 (C)	**16.8**	29.7	20200	67	180	180-200-225-250	—	—	70100	82900	25800	105000
	GTN13 R2 (C)	**22.0**	22.8	26400	67	180	180-200-225-250	—	—	75900	89800	28200	105000
	GTN13 R2 (C)	**26.4**	18.9	28300	60	180	180-200-225-250	—	—	80200	94900	30000	105000
	GTN13 R3	**53.7**	9.3	28400	30	80	132-160-180-200	—	—	99200	117400	38000	105000
	GTN13 R3	**64.0**	7.8	34100	31	80	132-160-180-200	—	—	104600	123800	40300	105000
	GTN13 R3	**69.9**	7.1	37200	31	80	132-160-180-200	—	—	107400	127100	41500	105000
	GTN13 R3	**82.2**	6.1	43700	31	80	132-160-180-200	—	—	112700	133400	43800	105000
	GTN13 R3	**97.5**	5.1	50000	29	80	132-160-180-200	—	—	118700	140400	46400	105000
	GTN13 R3	**107**	4.7	45100	24	80	132-160-180-200	—	—	122000	144400	47900	105000
	GTN13 R3	**127**	3.9	46600	21	80	132-160-180-200	—	—	128500	152000	50700	105000
	GTN13 R3	**153**	3.3	41100	15.4	80	132-160-180-200	—	—	135800	160700	53900	105000
	GTN13 R4	**185**	2.7	43900	14.1	44	71-80-90-100-112-132-160	—	—	143700	170000	57400	105000
	GTN13 R4	**201**	2.5	47700	14.1	44	71-80-90-100-112-132-160	—	—	147300	174400	59000	105000
	GTN13 R4	**237**	2.1	53000	13.2	44	71-80-90-100-112-132-160	—	—	154900	183300	62400	105000
	GTN13 R4	**281**	1.8	51300	10.8	44	71-80-90-100-112-132-160	—	—	163000	192900	66000	105000
	GTN13 R4	**309**	1.6	53500	10.2	44	71-80-90-100-112-132-160	—	—	167700	198400	68100	105000
	GTN13 R4	**346**	1.4	55200	9.5	44	71-80-90-100-112-132-160	—	—	173400	205200	70700	105000
	GTN13 R4	**387**	1.3	55500	8.5	44	71-80-90-100-112-132-160	—	—	179500	212400	73500	105000
	GTN13 R4	**450**	1.1	57000	7.5	44	71-80-90-100-112-132-160	—	—	187800	222200	77300	105000
	GTN13 R4	**496**	1.0	53000	6.3	44	71-80-90-100-112-132-160	—	—	192000	228800	79800	105000
	GTN13 R4	**535**	0.94	58000	6.4	44	71-80-90-100-112-132-160	—	—	192000	231000	80000	105000
	GTN13 R4	**647**	0.77	58000	5.3	44	71-80-90-100-112-132-160	—	—	192000	231000	80000	105000
	GTN13 R4	**778**	0.64	49000	3.7	44	71-80-90-100-112-132-160	—	—	192000	231000	80000	105000

GTN14 R — 84000 Nm

n_1 min^{-1}		i	n_2 min^{-1}	M_{n2} Nm	P_{n1} kW	Pt kW	P (IEC)	Rn_2 [N] LK	LS	HK/MK	HS/MS	LSH	$M_{2\,max}$ Nm
1500	**GTN14 R3 (B)**	**51.1**	29.4	38500	130	55	180-200-225	—	—	75000	88100	29200	115000
	GTN14 R3 (B)	**65.5**	22.9	49700	130	55	180-200-225	—	—	80900	94900	31700	115000
	GTN14 R3 (B)	**77.8**	19.3	51500	114	55	180-200-225	—	—	85100	100000	33600	115000
	GTN14 R3 (B)	**82.3**	18.2	52400	110	55	180-200-225	—	—	86600	101600	34200	115000
	GTN14 R3 (B)	**97.6**	15.4	55100	97	55	180-200-225	—	—	91100	107000	36200	115000
	GTN14 R3 (B)	**113**	13.2	48000	73	55	180-200-225	—	—	95300	111900	38100	115000
	GTN14 R3 (C)	**70.7**	21.2	43900	107	55	180-200-225-250	—	—	82700	97100	32500	115000
	GTN14 R3 (C)	**90.7**	16.5	47300	90	55	180-200-225-250	—	—	89200	104700	35300	115000
	GTN14 R3 (C)	**108**	13.9	49800	80	55	180-200-225-250	—	—	93900	110200	37400	115000
	GTN14 R3 (C)	**114**	13.2	51700	78	55	180-200-225-250	—	—	95400	112100	38100	115000
	GTN14 R3 (C)	**135**	11.1	60500	77	55	180-200-225-250	—	—	100500	118000	40300	115000
	GTN14 R3 (C)	**157**	9.5	52000	57	55	180-200-225-250	—	—	105100	123400	42400	115000
	GTN14 R4	**160**	9.4	56200	35	22	71-80-90-100-112-132-160	—	—	105800	124200	42700	115000
	GTN14 R4	**189**	7.9	59000	35	22	71-80-90-100-112-132-160	—	—	111200	130500	45100	115000
	GTN14 R4	**238**	6.3	71100	35	22	71-80-90-100-112-132-160	—	—	119000	139700	48700	115000
	GTN14 R4	**276**	5.4	75700	35	22	71-80-90-100-112-132-160	—	—	124500	146200	51200	115000
	GTN14 R4	**354**	4.2	78200	35	22	71-80-90-100-112-132-160	—	—	134200	157500	55600	115000
	GTN14 R4	**421**	3.6	78800	33	22	71-80-90-100-112-132-160	—	—	141300	165900	58900	115000
	GTN14 R4	**445**	3.4	67800	27	22	71-80-90-100-112-132-160	—	—	143600	168700	60000	115000
	GTN14 R4	**528**	2.8	68800	23	22	71-80-90-100-112-132-160	—	—	151200	177500	63500	115000
	GTN14 R4	**614**	2.4	57600	16.7	22	71-80-90-100-112-132-160	—	—	158200	185800	66800	115000
1000	**GTN14 R3 (B)**	**51.1**	19.6	43500	98	66	180-200-225	—	—	84700	99500	33400	115000
	GTN14 R3 (B)	**65.5**	15.3	56500	99	66	180-200-225	—	—	91300	107200	36300	115000
	GTN14 R3 (B)	**77.8**	12.9	58000	86	66	180-200-225	—	—	96100	112900	38400	115000

B

GTN14 R — 84000 Nm

n_1 min^{-1}		i	n_2 min^{-1}	M_{n2} Nm	P_{n1} kW	Pt kW	P (IEC)	Rn_2 [N] LK	LS	HK/MK	HS/MS	LSH	$M_{2\,max}$ Nm
1000	**GTN14 R3 (B)**	**82.3**	12.2	58900	82	66	180-200-225	—	—	97800	114800	39100	115000
	GTN14 R3 (B)	**97.6**	10.2	62000	73	66	180-200-225	—	—	102900	120800	41400	115000
	GTN14 R3 (B)	**113**	8.8	52000	53	66	180-200-225	—	—	107700	126400	43600	115000
	GTN14 R3 (C)	**70.7**	14.1	49600	81	66	180-200-225-250	—	—	93400	109700	37200	115000
	GTN14 R3 (C)	**90.7**	11.0	53500	68	66	180-200-225-250	—	—	100700	118200	40400	115000
	GTN14 R3 (C)	**108**	9.3	56300	60	66	180-200-225-250	—	—	106000	124500	42800	115000
	GTN14 R3 (C)	**114**	8.8	57700	58	66	180-200-225-250	—	—	107800	126600	43600	115000
	GTN14 R3 (C)	**135**	7.4	63700	54	66	180-200-225-250	—	—	113500	133200	46200	115000
	GTN14 R3 (C)	**157**	6.4	52000	38	66	180-200-225-250	—	—	118700	139400	48600	115000
	GTN14 R4	**160**	6.2	63400	35	26	71-80-90-100-112-132-160	—	—	119500	140300	48900	115000
	GTN14 R4	**189**	5.3	66700	35	26	71-80-90-100-112-132-160	—	—	125600	147400	51700	115000
	GTN14 R4	**238**	4.2	77000	35	26	71-80-90-100-112-132-160	—	—	134400	157800	55700	115000
	GTN14 R4	**276**	3.6	78700	34	26	71-80-90-100-112-132-160	—	—	140600	165100	58600	115000
	GTN14 R4	**354**	2.8	79600	27	26	71-80-90-100-112-132-160	—	—	151500	177900	63700	115000
	GTN14 R4	**421**	2.4	80200	23	26	71-80-90-100-112-132-160	—	—	159500	187300	67400	115000
	GTN14 R4	**445**	2.2	70700	18.8	26	71-80-90-100-112-132-160	—	—	162200	190500	68700	115000
	GTN14 R4	**528**	1.9	72400	16.2	26	71-80-90-100-112-132-160	—	—	170800	200500	72700	115000
	GTN14 R4	**614**	1.6	61600	11.9	26	71-80-90-100-112-132-160	—	—	178700	209800	76500	115000
500	**GTN14 R3 (B)**	**51.1**	9.8	53600	60	110	180-200-225	—	—	104300	122500	42100	115000
	GTN14 R3 (B)	**65.5**	7.6	69400	61	110	180-200-225	—	—	112400	132000	45700	115000
	GTN14 R3 (B)	**77.8**	6.4	71700	53	110	180-200-225	—	—	118400	139000	48400	115000
	GTN14 R3 (B)	**82.3**	6.1	64600	45	110	180-200-225	—	—	120400	141300	49300	115000
	GTN14 R3 (B)	**97.6**	5.1	65400	38	110	180-200-225	—	—	126700	148800	52200	115000
	GTN14 R3 (B)	**113**	4.4	52900	27	110	180-200-225	—	—	132600	155600	54900	115000
	GTN14 R3 (C)	**70.7**	7.1	61100	50	110	180-200-225-250	—	—	115000	135100	46900	115000
	GTN14 R3 (C)	**90.7**	5.5	65800	42	110	180-200-225-250	—	—	124000	145500	51000	115000
	GTN14 R3 (C)	**108**	4.6	69000	37	110	180-200-225-250	—	—	130500	153200	53900	115000
	GTN14 R3 (C)	**114**	4.4	66200	33	110	180-200-225-250	—	—	132700	155800	55000	115000
	GTN14 R3 (C)	**135**	3.7	67200	29	110	180-200-225-250	—	—	139700	164000	58200	115000
	GTN14 R3 (C)	**157**	3.2	55500	20	110	180-200-225-250	—	—	146200	171600	61200	115000
	GTN14 R4	**160**	3.1	74700	28	44	71-80-90-100-112-132-160	—	—	147100	172700	61600	115000
	GTN14 R4	**189**	2.6	78200	24	44	71-80-90-100-112-132-160	—	—	154600	181500	65100	115000
	GTN14 R4	**238**	2.1	80700	20	44	71-80-90-100-112-132-160	—	—	165500	194300	70200	115000
	GTN14 R4	**276**	1.8	81400	17.4	44	71-80-90-100-112-132-160	—	—	173100	203300	73800	115000
	GTN14 R4	**354**	1.4	82500	13.8	44	71-80-90-100-112-132-160	—	—	186600	219100	80300	115000
	GTN14 R4	**421**	1.2	83200	11.7	44	71-80-90-100-112-132-160	—	—	196400	230600	85000	115000
	GTN14 R4	**445**	1.1	77900	10.4	44	71-80-90-100-112-132-160	—	—	199700	234500	86600	115000
	GTN14 R4	**528**	0.95	79200	8.9	44	71-80-90-100-112-132-160	—	—	206000	243000	90000	115000
	GTN14 R4	**614**	0.81	66800	6.4	44	71-80-90-100-112-132-160	—	—	206000	243000	90000	115000

GTN15 R — 105000 Nm

n_1 min^{-1}		i	n_2 min^{-1}	M_{n2} Nm	P_{n1} kW	Pt kW	P (IEC)	Rn_2 [N] LK	LS	HK/MK	HS/MS	LSH	$M_{2\,max}$ Nm
1500	**GTN15 R3 (B)**	**51.1**	29.4	48100	150	75	180-200-225-250	—	—	75000	88100	29200	135000
	GTN15 R3 (B)	**65.5**	22.9	62100	150	75	180-200-225-250	—	—	80900	94900	31700	135000
	GTN15 R3 (B)	**77.8**	19.3	64400	143	75	180-200-225-250	—	—	85100	100000	33600	135000
	GTN15 R3 (B)	**82.3**	18.2	65500	137	75	180-200-225-250	—	—	86600	101600	34200	135000
	GTN15 R3 (B)	**97.6**	15.4	68800	121	75	180-200-225-250	—	—	91100	107000	36200	135000
	GTN15 R3 (B)	**113**	13.2	60000	91	75	180-200-225-250	—	—	95300	111900	38100	135000
	GTN15 R3 (C)	**70.7**	21.2	54900	134	90	180-200-225-250	—	—	82700	97100	32500	135000
	GTN15 R3 (C)	**90.7**	16.5	59200	112	90	180-200-225-250	—	—	89200	104700	35300	135000
	GTN15 R3 (C)	**108**	13.9	62300	100	90	180-200-225-250	—	—	93900	110200	37400	135000
	GTN15 R3 (C)	**114**	13.2	64700	98	90	180-200-225-250	—	—	95400	112100	38100	135000
	GTN15 R3 (C)	**135**	11.1	75700	96	90	180-200-225-250	—	—	100500	118000	40300	135000
	GTN15 R3 (C)	**157**	9.5	65000	71	90	180-200-225-250	—	—	105100	123400	42400	135000
	GTN15 R4	**225**	6.7	77700	61	40	132-160-180-200	—	—	117100	137500	47800	135000
	GTN15 R4	**269**	5.6	82000	54	40	132-160-180-200	—	—	123500	145000	50700	135000
	GTN15 R4	**345**	4.3	96000	49	40	132-160-180-200	—	—	133100	156200	55100	135000

B

GTN15 R — 105000 Nm

n_1 min^{-1}		i	n_2 min^{-1}	M_{n2} Nm	P_{n1} kW	Pt kW	P (IEC)	Rn_2 [N] LK	LS	HK/MK	HS/MS	LSH	$M_{2\,max}$ Nm
1500	GTN15 R4	409	3.7	98300	43	40	132-160-180-200	—	—	140100	164500	58400	135000
	GTN15 R4	525	2.9	99400	34	40	132-160-180-200	—	—	151000	177300	63400	135000
	GTN15 R4	623	2.4	100200	29	40	132-160-180-200	—	—	158900	186600	67200	135000
	GTN15 R4	659	2.3	88200	24	40	132-160-180-200	—	—	161600	189800	68400	135000
	GTN15 R4	782	1.9	90300	20	40	132-160-180-200	—	—	170200	199800	72400	135000
	GTN15 R4	909	1.6	76900	15.0	40	132-160-180-200	—	—	178000	209000	76200	135000
1000	GTN15 R3 (B)	51.1	19.6	54400	122	90	180-200-225-250	—	—	84700	99500	33400	135000
	GTN15 R3 (B)	65.5	15.3	70700	124	90	180-200-225-250	—	—	91300	107200	36300	135000
	GTN15 R3 (B)	77.8	12.9	72500	107	90	180-200-225-250	—	—	96100	112900	38400	135000
	GTN15 R3 (B)	82.3	12.2	73700	103	90	180-200-225-250	—	—	97800	114800	39100	135000
	GTN15 R3 (B)	97.6	10.2	77500	91	90	180-200-225-250	—	—	102900	120800	41400	135000
	GTN15 R3 (B)	113	8.8	65000	66	90	180-200-225-250	—	—	107700	126400	43600	135000
	GTN15 R3 (C)	70.7	14.1	62000	101	108	180-200-225-250	—	—	93400	109700	37200	135000
	GTN15 R3 (C)	90.7	11.0	66800	85	108	180-200-225-250	—	—	100700	118200	40400	135000
	GTN15 R3 (C)	108	9.3	70400	75	108	180-200-225-250	—	—	106000	124500	42800	135000
	GTN15 R3 (C)	114	8.8	72100	73	108	180-200-225-250	—	—	107800	126600	43600	135000
	GTN15 R3 (C)	135	7.4	79600	68	108	180-200-225-250	—	—	113500	133200	46200	135000
	GTN15 R3 (C)	157	6.4	65000	47	108	180-200-225-250	—	—	118700	139400	48600	135000
	GTN15 R4	225	4.4	86800	46	48	132-160-180-200	—	—	132300	155300	54800	135000
	GTN15 R4	269	3.7	90500	40	48	132-160-180-200	—	—	139500	163700	58100	135000
	GTN15 R4	345	2.9	98900	34	48	132-160-180-200	—	—	150300	176500	63100	135000
	GTN15 R4	409	2.4	100100	29	48	132-160-180-200	—	—	158200	185800	66800	135000
	GTN15 R4	525	1.9	101500	23	48	132-160-180-200	—	—	170500	200200	72600	135000
	GTN15 R4	623	1.6	102400	19.4	48	132-160-180-200	—	—	179500	210800	76900	135000
	GTN15 R4	659	1.5	93300	16.8	48	132-160-180-200	—	—	182500	214300	78300	135000
	GTN15 R4	782	1.3	95600	14.5	48	132-160-180-200	—	—	192200	225600	82900	135000
	GTN15 R4	909	1.1	82200	10.7	48	132-160-180-200	—	—	201000	236000	87200	135000
500	GTN15 R3 (B)	51.1	9.8	67000	75	150	180-200-225-250	—	—	104300	122500	42100	135000
	GTN15 R3 (B)	65.5	7.6	86800	76	150	180-200-225-250	—	—	112400	132000	45700	135000
	GTN15 R3 (B)	77.8	6.4	89600	66	150	180-200-225-250	—	—	118400	139000	48400	135000
	GTN15 R3 (B)	82.3	6.1	80700	56	150	180-200-225-250	—	—	120400	141300	49300	135000
	GTN15 R3 (B)	97.6	5.1	81700	48	150	180-200-225-250	—	—	126700	148800	52200	135000
	GTN15 R3 (B)	113	4.4	66200	33	150	180-200-225-250	—	—	132600	155600	54900	135000
	GTN15 R3 (C)	70.7	7.1	76400	62	180	180-200-225-250	—	—	115000	135100	46900	135000
	GTN15 R3 (C)	90.7	5.5	82300	52	180	180-200-225-250	—	—	124000	145500	51000	135000
	GTN15 R3 (C)	108	4.6	86200	46	180	180-200-225-250	—	—	130500	153200	53900	135000
	GTN15 R3 (C)	114	4.4	82800	42	180	180-200-225-250	—	—	132700	155800	55000	135000
	GTN15 R3 (C)	135	3.7	84000	36	180	180-200-225-250	—	—	139700	164000	58200	135000
	GTN15 R3 (C)	157	3.2	69300	25	180	180-200-225-250	—	—	146200	171600	61200	135000
	GTN15 R4	225	2.2	98500	26	80	132-160-180-200	—	—	162800	191200	69000	135000
	GTN15 R4	269	1.9	100900	22	80	132-160-180-200	—	—	171700	201600	73200	135000
	GTN15 R4	345	1.4	102900	17.7	80	132-160-180-200	—	—	185000	217200	79500	135000
	GTN15 R4	409	1.2	103900	15.0	80	132-160-180-200	—	—	194800	228700	84200	135000
	GTN15 R4	525	0.95	105000	11.8	80	132-160-180-200	—	—	206000	243000	90000	135000
	GTN15 R4	623	0.80	105000	10.0	80	132-160-180-200	—	—	206000	243000	90000	135000
	GTN15 R4	659	0.76	99000	8.9	80	132-160-180-200	—	—	206000	243000	90000	135000
	GTN15 R4	782	0.64	99000	7.5	80	132-160-180-200	—	—	206000	243000	90000	135000
	GTN15 R4	909	0.55	83500	5.4	80	132-160-180-200	—	—	206000	243000	90000	135000

GTN16 R — 138820 Nm

n_1 min^{-1}		i	n_2 min^{-1}	M_{n2} Nm	P_{n1} kW	Pt kW	P (IEC)	Rn_2 [N] LK	LS	HK/MK	HS/MS	LSH	$M_{2\,max}$ Nm
1500	GTN16 R3 (B)	51.1	29.4	50000	150	75	180-200-225-250	—	—	124800	138800	48600	192000
	GTN16 R3 (B)	65.5	22.9	63800	150	75	180-200-225-250	—	—	134500	149500	52800	192000
	GTN16 R3 (B)	77.8	19.3	65800	146	75	180-200-225-250	—	—	141600	157400	55900	192000
	GTN16 R3 (C)	70.7	21.2	59300	144	90	180-200-225-250	—	—	137600	153000	54200	192000
	GTN16 R3 (C)	90.7	16.5	69800	132	90	180-200-225-250	—	—	148200	164900	58900	192000
	GTN16 R3 (C)	108	13.9	72500	116	90	180-200-225-250	—	—	156100	173600	62300	192000

B

GTN16 R — 138820 Nm

n_1 min^{-1}		i	n_2 min^{-1}	M_{n2} Nm	P_{n1} kW	Pt kW	P (IEC)	Rn_2 [N] LK	LS	HK/MK	HS/MS	LSH	$M_{2\,max}$ Nm
1500	GTN16 R4	225	6.7	94500	74	45	132-160-180-200	—	—	194700	216600	79700	192000
	GTN16 R4	269	5.6	99700	66	45	132-160-180-200	—	—	205300	228300	84600	192000
	GTN16 R4	289	5.2	105700	65	45	132-160-180-200	—	—	209900	233400	86600	192000
	GTN16 R4	345	4.3	107300	55	45	132-160-180-200	—	—	221300	246100	91900	192000
	GTN16 R4	409	3.7	112700	49	45	132-160-180-200	—	—	232900	259100	97300	192000
	GTN16 R4	443	3.4	117300	47	45	132-160-180-200	—	—	238500	265200	99900	192000
	GTN16 R4	525	2.9	118900	40	45	132-160-180-200	—	—	251000	279200	105700	192000
	GTN16 R4	623	2.4	115400	33	45	132-160-180-200	—	—	264300	293900	111900	192000
1000	GTN16 R3 (B)	51.1	19.6	56900	128	90	180-200-225-250	—	—	140900	156700	55700	192000
	GTN16 R3 (B)	65.5	15.3	72400	127	90	180-200-225-250	—	—	151900	168900	60500	192000
	GTN16 R3 (B)	77.8	12.9	74300	110	90	180-200-225-250	—	—	159900	177800	64000	192000
	GTN16 R3 (C)	70.7	14.1	66900	109	108	180-200-225-250	—	—	155300	172800	62000	192000
	GTN16 R3 (C)	90.7	11.0	78800	100	108	180-200-225-250	—	—	167400	186200	67400	192000
	GTN16 R3 (C)	108	9.3	81900	87	108	180-200-225-250	—	—	176200	196000	71400	192000
	GTN16 R4	225	4.4	106600	56	54	132-160-180-200	—	—	219900	244600	91300	192000
	GTN16 R4	269	3.7	112200	49	54	132-160-180-200	—	—	231900	257900	96800	192000
	GTN16 R4	289	3.5	116700	48	54	132-160-180-200	—	—	237000	263600	99200	192000
	GTN16 R4	345	2.9	120700	41	54	132-160-180-200	—	—	249900	277900	105200	192000
	GTN16 R4	409	2.4	126200	36	54	132-160-180-200	—	—	263100	292600	111400	192000
	GTN16 R4	443	2.3	127400	34	54	132-160-180-200	—	—	269300	299500	114300	192000
	GTN16 R4	525	1.9	127500	29	54	132-160-180-200	—	—	283500	315300	121000	192000
	GTN16 R4	623	1.6	119300	23	54	132-160-180-200	—	—	298500	331900	128100	192000
500	GTN16 R3 (B)	51.1	9.8	70800	79	150	180-200-225-250	—	—	173500	192900	70100	192000
	GTN16 R3 (B)	65.5	7.6	90400	79	150	180-200-225-250	—	—	187000	207900	76200	192000
	GTN16 R3 (B)	77.8	6.4	91500	67	150	180-200-225-250	—	—	196800	218900	80700	192000
	GTN16 R3 (C)	70.7	7.1	82400	67	180	180-200-225-250	—	—	191300	212700	78100	192000
	GTN16 R3 (C)	90.7	5.5	97000	61	180	180-200-225-250	—	—	206100	229200	84900	192000
	GTN16 R3 (C)	108	4.6	99600	53	180	180-200-225-250	—	—	217000	241300	89900	192000
	GTN16 R4	225	2.2	127600	34	90	132-160-180-200	—	—	270700	301100	115000	192000
	GTN16 R4	269	1.9	130000	29	90	132-160-180-200	—	—	285500	317500	122000	192000
	GTN16 R4	289	1.7	131000	27	90	132-160-180-200	—	—	291800	324500	124900	192000
	GTN16 R4	345	1.4	133500	23	90	132-160-180-200	—	—	307700	342200	132500	192000
	GTN16 R4	409	1.2	135900	19.6	90	132-160-180-200	—	—	323900	360200	140300	192000
	GTN16 R4	443	1.1	137000	18.3	90	132-160-180-200	—	—	331600	368700	144000	192000
	GTN16 R4	525	0.95	138800	15.6	90	132-160-180-200	—	—	345000	385000	150000	192000
	GTN16 R4	623	0.80	124000	11.8	90	132-160-180-200	—	—	345000	385000	150000	192000

GTN17 R — 187860 Nm

n_1 min^{-1}		i	n_2 min^{-1}	M_{n2} Nm	P_{n1} kW	Pt kW	P (IEC)	Rn_2 [N] LK	LS	HK/MK	HS/MS	LSH	$M_{2\,max}$ Nm
1500	GTN17 R3 (B)	49.8	30	46900	150	90	180-200-225-250	—	—	159200	169500	48200	393000
	GTN17 R3 (B)	64.9	23.1	61200	150	90	180-200-225-250	—	—	172400	183500	52700	393000
	GTN17 R3 (B)	78.1	19.2	75100	150	90	180-200-225-250	—	—	182200	194000	56000	393000
	GTN17 R3 (B)	83.3	18.0	80200	150	90	180-200-225-250	—	—	185800	197800	57200	393000
	GTN17 R3 (B)	100	15.0	96200	150	90	180-200-225-250	—	—	196400	209100	60900	393000
	GTN17 R3 (B)	119	12.6	111000	150	90	180-200-225-250	—	—	206700	220100	64400	393000
	GTN17 R3 (C)	68.9	21.8	57800	144	100	180-200-225-250	—	—	175500	186900	53700	393000
	GTN17 R3 (C)	89.8	16.7	75300	144	100	180-200-225-250	—	—	190000	202300	58700	393000
	GTN17 R3 (C)	108	13.9	90600	144	100	180-200-225-250	—	—	200900	213900	62400	393000
	GTN17 R3 (C)	115	13.0	96600	144	100	180-200-225-250	—	—	204800	218100	63800	393000
	GTN17 R3 (C)	139	10.8	116300	144	100	180-200-225-250	—	—	216500	230500	67800	393000
	GTN17 R3 (C)	165	9.1	118900	124	100	180-200-225-250	—	—	227900	242700	71800	393000
	GTN17 R4	220	6.8	81400	66	50	132-160-180-200	—	—	248500	264500	79000	393000
	GTN17 R4	262	5.7	97200	66	50	132-160-180-200	—	—	262000	278900	83800	393000
	GTN17 R4	336	4.5	124700	66	50	132-160-180-200	—	—	282300	300600	91100	393000
	GTN17 R4	399	3.8	148000	66	50	132-160-180-200	—	—	297200	316500	96500	393000
	GTN17 R4	438	3.4	157000	64	50	132-160-180-200	—	—	305700	325500	99500	393000

GTN17 R — 187860 Nm

n_1 min^{-1}		i	n_2 min^{-1}	M_{n2} Nm	P_{n1} kW	Pt kW	P (IEC)	Rn_2 [N] LK	LS	HK/MK	HS/MS	LSH	$M_{2\,max}$ Nm
1500	GTN17 R4	520	2.9	164800	56	50	132-160-180-200	—	—	321800	342600	105400	393000
	GTN17 R4	626	2.4	155000	44	50	132-160-180-200	—	—	340200	362200	112100	393000
	GTN17 R4	677	2.2	164700	43	50	132-160-180-200	—	—	348300	370800	115000	393000
	GTN17 R4	803	1.9	165900	37	50	132-160-180-200	—	—	366700	390400	121800	393000
	GTN17 R4	953	1.6	145000	27	50	132-160-180-200	—	—	386000	411000	129000	393000
1000	GTN17 R3 (B)	49.8	20.1	53000	122	108	180-200-225-250	—	—	179800	191400	55200	393000
	GTN17 R3 (B)	64.9	15.4	69100	122	108	180-200-225-250	—	—	194700	207300	60300	393000
	GTN17 R3 (B)	78.1	12.8	85500	126	108	180-200-225-250	—	—	205800	219100	64100	393000
	GTN17 R3 (B)	83.3	12.0	90800	125	108	180-200-225-250	—	—	209800	223400	65500	393000
	GTN17 R3 (B)	100	10.0	109300	125	108	180-200-225-250	—	—	221800	236100	69700	393000
	GTN17 R3 (B)	119	8.4	119100	115	108	180-200-225-250	—	—	233500	248600	73800	393000
	GTN17 R3 (C)	68.9	14.5	65200	109	120	180-200-225-250	—	—	198200	211000	61500	393000
	GTN17 R3 (C)	89.8	11.1	85000	109	120	180-200-225-250	—	—	214600	228500	67200	393000
	GTN17 R3 (C)	108	9.2	102400	109	120	180-200-225-250	—	—	226900	241600	71500	393000
	GTN17 R3 (C)	115	8.7	109100	109	120	180-200-225-250	—	—	231300	246300	73000	393000
	GTN17 R3 (C)	139	7.2	131400	109	120	180-200-225-250	—	—	244500	260300	77700	393000
	GTN17 R3 (C)	165	6.1	119600	83	120	180-200-225-250	—	—	257400	274100	82200	393000
	GTN17 R4	220	4.6	92000	50	60	132-160-180-200	—	—	280600	298700	90500	393000
	GTN17 R4	262	3.8	109700	50	60	132-160-180-200	—	—	295900	315000	96000	393000
	GTN17 R4	336	3.0	140800	50	60	132-160-180-200	—	—	318900	339500	104300	393000
	GTN17 R4	399	2.5	167100	50	60	132-160-180-200	—	—	335700	357400	110400	393000
	GTN17 R4	438	2.3	172800	47	60	132-160-180-200	—	—	345200	367600	113900	393000
	GTN17 R4	520	1.9	175200	40	60	132-160-180-200	—	—	363400	387000	120600	393000
	GTN17 R4	626	1.6	155000	29	60	132-160-180-200	—	—	384200	409100	128300	393000
	GTN17 R4	677	1.5	167400	29	60	132-160-180-200	—	—	393300	418800	131700	393000
	GTN17 R4	803	1.2	168500	25	60	132-160-180-200	—	—	414100	440900	139400	393000
	GTN17 R4	953	1.0	154900	19.2	60	132-160-180-200	—	—	435900	464100	147600	393000
500	GTN17 R3 (B)	49.8	10.0	65200	75	180	180-200-225-250	—	—	221300	235700	69500	393000
	GTN17 R3 (B)	64.9	7.7	85000	75	180	180-200-225-250	—	—	239700	255200	75900	393000
	GTN17 R3 (B)	78.1	6.4	106500	78	180	180-200-225-250	—	—	253400	269800	80800	393000
	GTN17 R3 (B)	83.3	6.0	113100	78	180	180-200-225-250	—	—	258300	275000	82500	393000
	GTN17 R3 (B)	100	5.0	134900	77	180	180-200-225-250	—	—	273100	290700	87800	393000
	GTN17 R3 (B)	119	4.2	123400	60	180	180-200-225-250	—	—	287500	306100	92900	393000
	GTN17 R3 (C)	68.9	7.3	80300	67	200	180-200-225-250	—	—	244000	259800	77500	393000
	GTN17 R3 (C)	89.8	5.6	104700	67	200	180-200-225-250	—	—	264200	281300	84600	393000
	GTN17 R3 (C)	108	4.6	123600	66	200	180-200-225-250	—	—	279300	297400	90000	393000
	GTN17 R3 (C)	115	4.3	134400	67	200	180-200-225-250	—	—	284800	303200	92000	393000
	GTN17 R3 (C)	139	3.6	154600	64	200	180-200-225-250	—	—	301000	320500	97800	393000
	GTN17 R3 (C)	165	3.0	130200	45	200	180-200-225-250	—	—	316900	337400	103600	393000
	GTN17 R4	220	2.3	112500	30	100	132-160-180-200	—	—	345400	367800	114000	393000
	GTN17 R4	262	1.9	134900	30	100	132-160-180-200	—	—	364200	387800	120900	393000
	GTN17 R4	336	1.5	173400	31	100	132-160-180-200	—	—	392600	418000	131400	393000
	GTN17 R4	399	1.3	196500	29	100	132-160-180-200	—	—	413200	440000	139100	393000
	GTN17 R4	438	1.1	182400	25	100	132-160-180-200	—	—	425000	452500	143500	393000
	GTN17 R4	520	0.96	184300	21	100	132-160-180-200	—	—	442000	470000	150000	393000
	GTN17 R4	626	0.80	155000	14.6	100	132-160-180-200	—	—	442000	470000	150000	393000
	GTN17 R4	677	0.74	170000	14.9	100	132-160-180-200	—	—	442000	470000	150000	393000
	GTN17 R4	803	0.62	170000	12.5	100	132-160-180-200	—	—	442000	470000	150000	393000
	GTN17 R4	953	0.52	156200	9.7	100	132-160-180-200	—	—	442000	470000	150000	393000

GTN18 R — 280580 Nm

n_1 min^{-1}		i	n_2 min^{-1}	M_{n2} Nm	P_{n1} kW	Pt kW	P (IEC)	Rn_2 [N] LK	LS	HK/MK	HS/MS	LSH	$M_{2\,max}$ Nm
1500	GTN18 R4 (B)	225	6.7	200200	150	90	180-200-225-250	—	—	313900	320300	106200	550000
	GTN18 R4 (B)	288	5.2	215700	133	90	180-200-225-250	—	—	338300	345200	115400	550000
	GTN18 R4 (B)	342	4.4	226200	117	90	180-200-225-250	—	—	356100	363400	122200	550000
	GTN18 R4 (B)	362	4.1	229600	113	90	180-200-225-250	—	—	362100	369600	124500	550000
	GTN18 R4 (B)	430	3.5	240400	99	90	180-200-225-250	—	—	381200	389100	131800	550000

B

GTN18 R

280580 Nm

n_1 min^{-1}		i	n_2 min^{-1}	M_{n2} Nm	P_{n1} kW	Pt kW	P (IEC)	Rn_2 [N] LK	LS	HK/MK	HS/MS	LSH	$M_{2\,max}$ Nm
1500	GTN18 R4 (B)	499	3.0	250300	89	90	180-200-225-250	—	—	398900	407000	138600	550000
	GTN18 R4 (C)	311	4.8	220500	126	110	180-200-225-250	—	—	346100	353200	118400	550000
	GTN18 R4 (C)	399	3.8	235700	105	110	180-200-225-250	—	—	373000	380600	128700	550000
	GTN18 R4 (C)	474	3.2	246800	92	110	180-200-225-250	—	—	392600	400700	136200	550000
	GTN18 R4 (C)	501	3.0	250600	89	110	180-200-225-250	—	—	399300	407500	138800	550000
	GTN18 R4 (C)	595	2.5	262400	78	110	180-200-225-250	—	—	420300	428900	146900	550000
	GTN18 R4 (C)	691	2.2	265600	68	110	180-200-225-250	—	—	439700	448800	154500	550000
1000	GTN18 R4 (B)	225	4.5	225300	119	108	180-200-225-250	—	—	354500	361800	121600	550000
	GTN18 R4 (B)	288	3.5	240900	99	108	180-200-225-250	—	—	382100	389900	132100	550000
	GTN18 R4 (B)	342	2.9	252200	87	108	180-200-225-250	—	—	402200	410500	139900	550000
	GTN18 R4 (B)	362	2.8	256000	84	108	180-200-225-250	—	—	409000	417400	142500	550000
	GTN18 R4 (B)	430	2.3	264300	73	108	180-200-225-250	—	—	430600	439400	150900	550000
	GTN18 R4 (B)	499	2.0	267100	63	108	180-200-225-250	—	—	450400	459700	158700	550000
	GTN18 R4 (C)	311	3.2	245800	93	132	180-200-225-250	—	—	390800	398900	135500	550000
	GTN18 R4 (C)	399	2.5	262900	78	132	180-200-225-250	—	—	421200	429900	147300	550000
	GTN18 R4 (C)	474	2.1	266200	66	132	180-200-225-250	—	—	443400	452500	155900	550000
	GTN18 R4 (C)	501	2.0	267200	63	132	180-200-225-250	—	—	450900	460200	158800	550000
	GTN18 R4 (C)	595	1.7	270500	54	132	180-200-225-250	—	—	474700	484400	168200	550000
	GTN18 R4 (C)	691	1.4	273400	47	132	180-200-225-250	—	—	496600	506800	176800	550000
500	GTN18 R4 (B)	225	2.2	265200	70	180	180-200-225-250	—	—	436500	445400	153200	550000
	GTN18 R4 (B)	288	1.7	269900	55	180	180-200-225-250	—	—	470400	480000	166500	550000
	GTN18 R4 (B)	342	1.5	273200	47	180	180-200-225-250	—	—	495200	505300	176300	550000
	GTN18 R4 (B)	362	1.4	274200	45	180	180-200-225-250	—	—	503000	513900	179600	550000
	GTN18 R4 (B)	430	1.2	277600	38	180	180-200-225-250	—	—	503000	541000	190100	550000
	GTN18 R4 (B)	499	1.0	280600	33	180	180-200-225-250	—	—	503000	565000	199900	550000
	GTN18 R4 (C)	311	1.6	271300	52	220	180-200-225-250	—	—	481200	491100	170700	550000
	GTN18 R4 (C)	399	1.3	276200	41	220	180-200-225-250	—	—	503000	529200	185500	550000
	GTN18 R4 (C)	474	1.1	279500	35	220	180-200-225-250	—	—	503000	557100	196400	550000
	GTN18 R4 (C)	501	1.00	280600	33	220	180-200-225-250	—	—	503000	565000	200000	550000
	GTN18 R4 (C)	595	0.84	280600	28	220	180-200-225-250	—	—	503000	565000	200000	550000
	GTN18 R4 (C)	691	0.72	280600	24	220	180-200-225-250	—	—	503000	565000	200000	550000

B

GTN19 R

403720 Nm

n_1 min^{-1}		i	n_2 min^{-1}	M_{n2} Nm	P_{n1} kW	Pt kW	P (IEC)	Rn_2 [N] LK	LS	HK/MK	HS/MS	LSH	$M_{2\,max}$ Nm
1500	GTN19 R4 (B)	249	6.0	227700	150	95	180-200-225-250	—	—	372100	409900	109900	680000
	GTN19 R4 (B)	320	4.7	289000	150	95	180-200-225-250	—	—	401000	441800	119400	680000
	GTN19 R4 (B)	379	4.0	304200	142	95	180-200-225-250	—	—	422100	465100	126500	680000
	GTN19 R4 (B)	401	3.7	310500	137	95	180-200-225-250	—	—	429200	472900	128800	680000
	GTN19 R4 (B)	475	3.2	300900	112	95	180-200-225-250	—	—	451500	497400	136300	680000
	GTN19 R4 (B)	563	2.7	313000	99	95	180-200-225-250	—	—	475300	523700	144300	680000
	GTN19 R4 (B)	655	2.3	321300	87	95	180-200-225-250	—	—	497300	547900	151700	680000
	GTN19 R4 (C)	345	4.4	259700	134	115	180-200-225-250	—	—	410200	451900	122500	680000
	GTN19 R4 (C)	442	3.4	279900	112	115	180-200-225-250	—	—	442100	487100	133100	680000
	GTN19 R4 (C)	525	2.9	294600	100	115	180-200-225-250	—	—	465400	512700	140900	680000
	GTN19 R4 (C)	555	2.7	306300	98	115	180-200-225-250	—	—	473200	521400	143600	680000
	GTN19 R4 (C)	657	2.3	322200	87	115	180-200-225-250	—	—	497800	548400	151900	680000
	GTN19 R4 (C)	780	1.9	331100	75	115	180-200-225-250	—	—	524000	577300	160800	680000
	GTN19 R4 (C)	906	1.7	335900	66	115	180-200-225-250	—	—	548200	604000	169100	680000
1000	GTN19 R4 (B)	249	4.0	257100	122	114	180-200-225-250	—	—	420200	462900	125800	680000
	GTN19 R4 (B)	320	3.1	323900	120	114	180-200-225-250	—	—	452800	498900	136700	680000
	GTN19 R4 (B)	379	2.6	342600	107	114	180-200-225-250	—	—	476700	525200	144800	680000
	GTN19 R4 (B)	401	2.5	348100	103	114	180-200-225-250	—	—	484800	534100	147500	680000
	GTN19 R4 (B)	475	2.1	326400	81	114	180-200-225-250	—	—	509900	561800	156000	680000
	GTN19 R4 (B)	563	1.8	335400	70	114	180-200-225-250	—	—	536800	591400	165200	680000
	GTN19 R4 (B)	655	1.5	339600	61	114	180-200-225-250	—	—	561600	618700	173700	680000
	GTN19 R4 (C)	345	2.9	293300	101	138	180-200-225-250	—	—	463300	510400	140200	680000
	GTN19 R4 (C)	442	2.3	316100	85	138	180-200-225-250	—	—	499300	550100	152400	680000
	GTN19 R4 (C)	525	1.9	332800	75	138	180-200-225-250	—	—	525600	579100	161300	680000

GTN19 R — 403720 Nm

n_1 min^{-1}		i	n_2 min^{-1}	M_{n2} Nm	P_{n1} kW	Pt kW	P (IEC)	Rn_2 [N] LK	LS	HK/MK	HS/MS	LSH	$M_{2\,max}$ Nm
1000	GTN19 R4 (C)	555	1.8	338600	72	138	180-200-225-250	—	—	534500	588800	164400	680000
	GTN19 R4 (C)	657	1.5	343700	62	138	180-200-225-250	—	—	562200	619400	173900	680000
	GTN19 R4 (C)	780	1.3	353300	54	138	180-200-225-250	—	—	591800	652000	184100	680000
	GTN19 R4 (C)	906	1.1	354900	46	138	180-200-225-250	—	—	619100	682100	193600	680000
500	GTN19 R4 (B)	249	2.0	316600	75	190	180-200-225-250	—	—	517300	570000	158500	680000
	GTN19 R4 (B)	320	1.6	373900	69	190	180-200-225-250	—	—	557500	614200	172300	680000
	GTN19 R4 (B)	379	1.3	386000	60	190	180-200-225-250	—	—	586900	646600	182400	680000
	GTN19 R4 (B)	401	1.2	379400	56	190	180-200-225-250	—	—	596800	657500	185800	680000
	GTN19 R4 (B)	475	1.1	364500	45	190	180-200-225-250	—	—	627700	691600	196500	680000
	GTN19 R4 (B)	563	0.89	367600	39	190	180-200-225-250	—	—	638000	702000	200000	680000
	GTN19 R4 (B)	655	0.76	359700	32	190	180-200-225-250	—	—	638000	702000	200000	680000
	GTN19 R4 (C)	345	1.5	361100	62	230	180-200-225-250	—	—	570300	628400	176700	680000
	GTN19 R4 (C)	442	1.1	389200	52	230	180-200-225-250	—	—	614700	677200	192000	680000
	GTN19 R4 (C)	525	0.95	403700	45	230	180-200-225-250	—	—	638000	702000	200000	680000
	GTN19 R4 (C)	555	0.90	389900	42	230	180-200-225-250	—	—	638000	702000	200000	680000
	GTN19 R4 (C)	657	0.76	367600	33	230	180-200-225-250	—	—	638000	702000	200000	680000
	GTN19 R4 (C)	780	0.64	367600	28	230	180-200-225-250	—	—	638000	702000	200000	680000
	GTN19 R4 (C)	906	0.55	359700	23	230	180-200-225-250	—	—	638000	702000	200000	680000

GTN21 R — 655200 Nm

n_1 min^{-1}		i	n_2 min^{-1}	M_{n2} Nm	P_{n1} kW	Pt kW	P (IEC)	Rn_2 [N] LK	LS	HK/MK	HS/MS	LSH	$M_{2\,max}$ Nm
1500	GTN21 R4 (B)	221	6.8	205600	150	105	180-200-225-250	—	—	440600	522400	634000	934000
	GTN21 R4 (B)	288	5.2	265300	150	105	180-200-225-250	—	—	477000	565700	692600	934000
	GTN21 R4 (B)	347	4.3	320600	150	105	180-200-225-250	—	—	504300	598000	736800	934000
	GTN21 R4 (B)	370	4.1	341300	150	105	180-200-225-250	—	—	514100	609600	752700	934000
	GTN21 R4 (B)	446	3.4	409600	150	105	180-200-225-250	—	—	543500	644500	800600	934000
	GTN21 R4 (B)	529	2.8	484700	150	105	180-200-225-250	—	—	572100	678500	847700	934000
	GTN21 R4 (C)	306	4.9	249000	144	125	180-200-225-250	—	—	485700	576000	706700	934000
	GTN21 R4 (C)	399	3.8	324600	144	125	180-200-225-250	—	—	525900	623700	771900	934000
	GTN21 R4 (C)	481	3.1	390700	144	125	180-200-225-250	—	—	556000	659300	821100	934000
	GTN21 R4 (C)	512	2.9	416600	144	125	180-200-225-250	—	—	566800	672100	838900	934000
	GTN21 R4 (C)	617	2.4	501400	144	125	180-200-225-250	—	—	599200	710600	892300	934000
	GTN21 R4 (C)	732	2.0	521400	126	125	180-200-225-250	—	—	630800	748000	944800	934000
1000	GTN21 R4 (B)	221	4.5	233700	125	126	180-200-225-250	—	—	497500	590000	725800	934000
	GTN21 R4 (B)	288	3.5	304200	125	126	180-200-225-250	—	—	538700	638800	792800	934000
	GTN21 R4 (B)	347	2.9	361600	123	126	180-200-225-250	—	—	569500	675400	843400	934000
	GTN21 R4 (B)	370	2.7	391600	125	126	180-200-225-250	—	—	580600	688500	861600	934000
	GTN21 R4 (B)	446	2.2	460100	122	126	180-200-225-250	—	—	613800	727900	916500	934000
	GTN21 R4 (B)	529	1.9	513000	115	126	180-200-225-250	—	—	646100	766200	970400	934000
	GTN21 R4 (C)	306	3.3	281200	109	150	180-200-225-250	—	—	548500	650500	808900	934000
	GTN21 R4 (C)	399	2.5	366600	109	150	180-200-225-250	—	—	593900	704300	883600	934000
	GTN21 R4 (C)	481	2.1	441300	109	150	180-200-225-250	—	—	627900	744600	940000	934000
	GTN21 R4 (C)	512	2.0	470500	109	150	180-200-225-250	—	—	640100	759100	960200	934000
	GTN21 R4 (C)	617	1.6	566500	109	150	180-200-225-250	—	—	676700	802500	1021500	934000
	GTN21 R4 (C)	732	1.4	529800	86	150	180-200-225-250	—	—	712400	844800	1081500	934000
500	GTN21 R4 (B)	221	2.3	290300	78	210	180-200-225-250	—	—	612500	726400	914500	934000
	GTN21 R4 (B)	288	1.7	379500	78	210	180-200-225-250	—	—	663200	786500	998900	934000
	GTN21 R4 (B)	347	1.4	450300	77	210	180-200-225-250	—	—	701200	831500	1062600	934000
	GTN21 R4 (B)	370	1.4	483100	77	210	180-200-225-250	—	—	714800	847600	1085500	934000
	GTN21 R4 (B)	446	1.1	567200	75	210	180-200-225-250	—	—	755600	896100	1154700	934000
	GTN21 R4 (B)	529	0.95	536400	60	210	180-200-225-250	—	—	779000	923000	1200000	934000
	GTN21 R4 (C)	306	1.6	346300	67	250	180-200-225-250	—	—	675300	800800	1019200	934000
	GTN21 R4 (C)	399	1.3	451600	67	250	180-200-225-250	—	—	731200	867100	1113300	934000
	GTN21 R4 (C)	481	1.0	543700	67	250	180-200-225-250	—	—	773000	916700	1184300	934000
	GTN21 R4 (C)	512	0.98	575400	66	250	180-200-225-250	—	—	779000	923000	1200000	934000
	GTN21 R4 (C)	617	0.81	655200	63	250	180-200-225-250	—	—	779000	923000	1200000	934000
	GTN21 R4 (C)	732	0.68	536400	43	250	180-200-225-250	—	—	779000	923000	1200000	934000

B

B

C GEARMOTOR SELECTION BY NUMBER OF WORKING CYCLES

C 根工作循环数选择齿轮箱

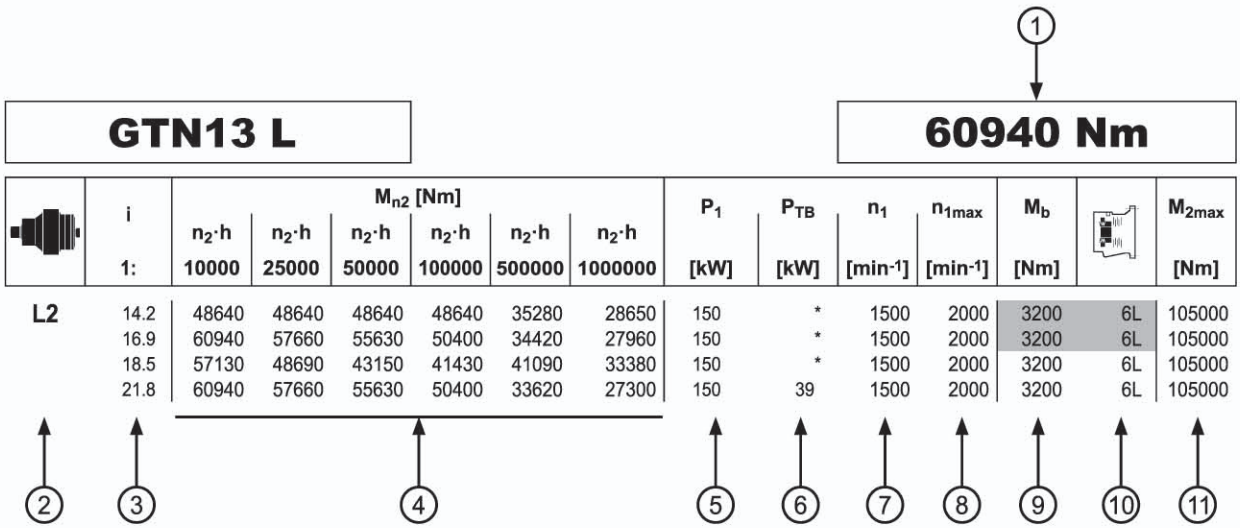

	i	M_{n2} [Nm]						P_1	P_{TB}	n_1	n_{1max}	M_b		M_{2max}
		$n_2 \cdot h$	$n_2 \cdot h$	$n_2 \cdot h$	$n_2 \cdot h$	$n_2 \cdot h$	$n_2 \cdot h$							
	1:	10000	25000	50000	100000	500000	1000000	[kW]	[kW]	[min^{-1}]	[min^{-1}]	[Nm]		[Nm]
L2	14.2	48640	48640	48640	48640	35280	28650	150	*	1500	2000	3200	6L	105000
	16.9	60940	57660	55630	50400	34420	27960	150	*	1500	2000	3200	6L	105000
	18.5	57130	48690	43150	41430	41090	33380	150	*	1500	2000	3200	6L	105000
	21.8	60940	57660	55630	50400	33620	27300	150	39	1500	2000	3200	6L	105000
		2	3		4			5	6	7	8	9	10	11

1	参考扭矩	Reference torque
2	减速机级数，同轴齿轮	Number of reduction stages (in-line gear unit)
3	传动比	Gear ratio
4	齿轮箱额定输出扭矩 服务系数Fs=1 $n_2 \cdot h$表示	Gearbox rated output torque based on: - service factor f_S=1 - $n_2 \cdot h$ indicated
5	最大功率传输到输入轴	Maximum power transmitted to input shaft
6	齿轮箱热功率	Gearbox thermal capacity
7	连续工作的输入转速	Input angular speed for continuous duty
8	最大输入角速度间歇工作20%基于60分钟运行	Maximum input angular speed for intermittent duty 20% based 60 min running
9	额定制动扭矩	Rated brake torque (Hydraulic brake)
10	制动器型号	Negative multidisc hydraulic brake
11	齿轮箱最大扭矩	Maximum output torque at gearbox

C

GTN00 L — 1250 Nm

	i	M_{n2} [Nm]						P_1	P_{TB}	n_1	n_{1max}	M_b		M_{2max}
		$n_2 \cdot h$	$n_2 \cdot h$	$n_2 \cdot h$	$n_2 \cdot h$	$n_2 \cdot h$	$n_2 \cdot h$							
	1:	10000	25000	50000	100000	500000	1000000	[kW]	[kW]	[min-1]	[min-1]	[Nm]		[Nm]
L1	3.48	760	730	730	730	730	730	20	*	2000	4000	260	4F	2000
	4.26	1250	1070	950	860	840	720	20	*	2000	4000	330	4H	2400
	5.77	860	730	650	650	650	630	20	*	2000	4000	260	4F	2400
	7.20	700	600	550	550	550	510	16.5	*	2000	4000	160	4D	2400
	9.00	460	390	370	370	370	370	8.9	*	2000	4000	160	4D	2400
L2	12.1	760	730	730	730	730	730	11.9	7.6	2000	4000	100	4B	2000
	14.8	1250	1070	950	860	840	720	12.6	7.7	2000	4000	100	4B	2000
	18.2	1250	1070	950	860	840	720	10.4	8.4	2000	4000	100	4B	2400
	20.1	860	730	650	650	650	630	7.2	6.6	2000	4000	100	4B	2000
	24.6	1250	1070	950	860	840	720	7.8	7.7	2000	4000	100	4B	2400
	30.7	1250	1070	950	860	840	720	6.4	7.0	2000	4000	50	4A	2400
	33.3	860	730	650	650	650	630	4.3	6.6	2000	4000	50	4A	2400
	38.4	1250	1070	950	860	840	720	5.2	6.8	2000	4000	50	4A	2400
	41.5	860	730	650	650	650	630	3.5	6.1	2000	4000	50	4A	2400
	51.9	860	730	650	650	650	630	2.9	5.9	2000	4000	50	4A	2400
	64.8	700	600	550	550	550	510	2.0	5.2	2000	4000	50	4A	2400
L3	51.6	1250	1070	950	860	840	720	4.2	5.6	2000	4000	50	4A	2000
	63.2	1250	1070	950	860	840	720	3.5	5.9	2000	4000	50	4A	2400
	69.9	860	730	650	650	650	630	2.4	4.9	2000	4000	50	4A	2000
	77.5	1250	1070	950	860	840	720	3.0	5.9	2000	4000	50	4A	2400
	85.6	1250	1070	950	860	840	720	2.7	5.7	2000	4000	50	4A	2400
	105	1250	1070	950	860	840	720	2.2	5.6	2000	4000	50	4A	2400
	116	860	730	650	650	650	630	1.6	5.0	2000	4000	50	4A	2400
	131	1250	1070	950	860	840	720	1.8	5.3	2000	4000	50	4A	2400
	142	1250	1070	950	860	840	720	1.6	5.1	2000	4000	50	4A	2400
	177	1250	1070	950	860	840	720	1.3	4.8	2000	4000	50	4A	2400
	192	860	730	650	650	650	630	1.0	4.6	2000	4000	50	4A	2400
	221	1250	1070	950	860	840	720	1.0	4.4	2000	4000	50	4A	2400
	240	860	730	650	650	650	630	0.82	4.4	2000	4000	50	4A	2400
	299	860	730	650	650	650	630	0.66	4.1	2000	4000	50	4A	2400
	374	860	730	650	650	650	630	0.53	4.0	2000	4000	50	4A	2400
L4	330	1250	1070	950	860	840	720	0.72	4.2	2000	4000	50	4A	2400
	403	860	730	650	650	650	630	0.50	3.8	2000	4000	50	4A	2400
	447	1250	1070	950	860	840	720	0.53	4.1	2000	4000	50	4A	2400
	494	1250	1070	950	860	840	720	0.48	3.8	2000	4000	50	4A	2400
	558	1250	1070	950	860	840	720	0.42	3.9	2000	4000	50	4A	2400
	616	1250	1070	950	860	840	720	0.38	3.6	2000	4000	50	4A	2400
	755	1250	1070	950	860	840	720	0.31	3.6	2000	4000	50	4A	2400
	819	1250	1070	950	860	840	720	0.29	3.5	2000	4000	50	4A	2400
	942	1250	1070	950	860	840	720	0.25	3.4	2000	4000	50	4A	2400
	1022	1250	1070	950	860	840	720	0.23	3.4	2000	4000	50	4A	2400
	1108	860	730	650	650	650	630	0.18	3.3	2000	4000	50	4A	2400
	1275	1250	1070	950	860	840	720	0.19	3.2	2000	4000	50	4A	2400
	1383	860	730	650	650	650	630	0.15	3.2	2000	4000	50	4A	2400
	1591	1250	1070	950	860	840	720	0.15	3.1	2000	4000	50	4A	2400
	1725	860	730	650	650	650	630	0.12	3.1	2000	4000	50	4A	2400
	2153	860	730	650	650	650	630	0.09	3.0	2000	4000	50	4A	2400
	2692	1000	1000	890	850	760	630	0.09	2.9	2000	4000	50	4A	2400

GTN01 L — 2460 Nm

	i	M_{n2} [Nm]						P_1	P_{TB}	n_1	n_{1max}	M_b		M_{2max}
		$n_2 \cdot h$	$n_2 \cdot h$	$n_2 \cdot h$	$n_2 \cdot h$	$n_2 \cdot h$	$n_2 \cdot h$							
	1:	10000	25000	50000	100000	500000	1000000	[kW]	[kW]	[min-1]	[min-1]	[Nm]		[Nm]
L1	3.48	1490	1430	1430	1430	1430	1300	30	*	2000	4000	440	4L	3400
	4.26	2460	2140	1890	1730	1580	1280	30	*	2000	4000	440	4L	3400
	5.77	1720	1460	1300	1300	1300	1240	30	*	2000	4000	400	4K	3400
	7.20	1150	1150	1150	1150	1150	940	30	*	2000	4000	260	4F	3400

C

GTN01 L — 2460 Nm

	i	M_{n2} [Nm]						P_1	P_{TB}	n_1	n_{1max}	M_b		M_{2max}
		$n_2 \cdot h$	$n_2 \cdot h$	$n_2 \cdot h$	$n_2 \cdot h$	$n_2 \cdot h$	$n_2 \cdot h$							
	1:	10000	25000	50000	100000	500000	1000000	[kW]	[kW]	[min-1]	[min-1]	[Nm]		[Nm]
L1	9.00	920	780	730	730	730	730	15.8	*	2000	4000	260	4F	3400
L2	12.1	1490	1430	1430	1430	1430	1300	23.9	9.0	2000	4000	160	4D	3400
	14.8	2460	2140	1890	1730	1580	1280	25.0	9.4	2000	4000	160	4D	3400
	18.2	2460	2140	1890	1730	1580	1280	20.7	10.2	2000	4000	160	4D	3400
	20.1	1720	1460	1300	1300	1300	1240	14.4	8.1	2000	4000	160	4D	3400
	24.6	2460	2140	1890	1730	1580	1280	15.6	9.2	2000	4000	160	4D	3400
	30.7	2000	2000	1830	1730	1580	1280	12.6	8.3	2000	4000	100	4B	3400
	33.3	1720	1460	1300	1300	1300	1240	8.7	7.9	2000	4000	100	4B	3400
	38.4	1600	1570	1570	1570	1530	1280	10.1	8.0	2000	4000	100	4B	3400
	41.5	1720	1460	1300	1300	1300	1240	7.0	7.3	2000	4000	100	4B	3400
	51.9	1720	1460	1300	1300	1300	1240	5.9	7.0	2000	4000	50	4A	3400
	64.8	1150	1150	1150	1150	1150	940	4.0	6.3	2000	4000	50	4A	3400
L3	51.6	2460	2140	1890	1730	1580	1280	8.3	5.8	2000	4000	50	4A	3400
	63.2	2460	2140	1890	1730	1580	1280	7.0	6.2	2000	4000	50	4A	3400
	69.9	1720	1460	1300	1300	1300	1240	4.7	5.2	2000	4000	50	4A	3400
	77.5	2460	2140	1890	1730	1580	1280	5.9	6.2	2000	4000	50	4A	3400
	85.6	2460	2140	1890	1730	1580	1280	5.4	5.9	2000	4000	50	4A	3400
	105	2460	2140	1890	1730	1580	1280	4.4	5.9	2000	4000	50	4A	3400
	116	1720	1460	1300	1300	1300	1240	3.1	5.3	2000	4000	50	4A	3400
	131	2460	2140	1890	1730	1580	1280	3.5	5.5	2000	4000	50	4A	3400
	142	2460	2140	1890	1730	1580	1280	3.2	5.3	2000	4000	50	4A	3400
	177	2460	2140	1890	1730	1580	1280	2.6	5.0	2000	4000	50	4A	3400
	192	1720	1460	1300	1300	1300	1240	2.0	4.8	2000	4000	50	4A	3400
	221	2000	2000	1830	1730	1580	1280	2.1	4.6	2000	4000	50	4A	3400
	240	1720	1460	1300	1300	1300	1240	1.6	4.5	2000	4000	50	4A	3400
	299	1720	1460	1300	1300	1300	1240	1.3	4.2	2000	4000	50	4A	3400
	374	1720	1460	1300	1300	1300	1240	1.0	4.1	2000	4000	50	4A	3400
L4	330	2460	2140	1890	1730	1580	1280	1.4	4.1	2000	4000	50	4A	3400
	403	1720	1460	1300	1300	1300	1240	1.00	3.7	2000	4000	50	4A	3400
	447	2460	2140	1890	1730	1580	1280	1.06	4.0	2000	4000	50	4A	3400
	494	2460	2140	1890	1730	1580	1280	0.96	3.7	2000	4000	50	4A	3400
	558	2460	2140	1890	1730	1580	1280	0.85	3.8	2000	4000	50	4A	3400
	616	2460	2140	1890	1730	1580	1280	0.77	3.5	2000	4000	50	4A	3400
	755	2460	2140	1890	1730	1580	1280	0.63	3.4	2000	4000	50	4A	3400
	819	2460	2140	1890	1730	1580	1280	0.58	3.4	2000	4000	50	4A	3400
	942	2460	2140	1890	1730	1580	1280	0.50	3.3	2000	4000	50	4A	3400
	1022	2460	2140	1890	1730	1580	1280	0.46	3.2	2000	4000	50	4A	3400
	1108	1720	1460	1300	1300	1300	1240	0.36	3.2	2000	4000	50	4A	3400
	1275	2460	2140	1890	1730	1580	1280	0.37	3.1	2000	4000	50	4A	3400
	1383	1720	1460	1300	1300	1300	1240	0.29	3.1	2000	4000	50	4A	3400
	1591	2000	2000	1830	1730	1580	1280	0.30	3.0	2000	4000	50	4A	3400
	1725	1720	1460	1300	1300	1300	1240	0.23	2.9	2000	4000	50	4A	3400
	2153	1720	1460	1300	1300	1300	1240	0.19	2.9	2000	4000	50	4A	3400
	2692	1720	1460	1300	1300	1300	1240	0.15	2.8	2000	4000	50	4A	3400

GTN03 L — 2970 Nm

	i	M_{n2} [Nm]						P_1	P_{TB}	n_1	n_{1max}	M_b		M_{2max}
		$n_2 \cdot h$	$n_2 \cdot h$	$n_2 \cdot h$	$n_2 \cdot h$	$n_2 \cdot h$	$n_2 \cdot h$							
	1:	10000	25000	50000	100000	500000	1000000	[kW]	[kW]	[min-1]	[min-1]	[Nm]		[Nm]
L1	3.60	2410	2310	2310	2310	2310	2120	40	*	1800	3800	800	5G	5200
	4.25	2970	2810	2810	2650	2570	2090	40	*	1800	3800	800	5G	5200
	5.33	2850	2520	2230	2200	2140	2030	40	*	1800	3800	630	5E	5200
	6.20	2440	2080	1840	1820	1820	1820	40	*	1800	3800	500	5C	5200
	7.50	2000	1750	1650	1650	1650	1500	40	*	1800	3800	400	5B	5200
	9.67	1050	900	860	860	860	860	17.3	*	1800	3800	400	5B	5200
L2	12.5	2410	2310	2310	2310	2130	1730	20	12.7	2000	4000	260	4F	5200

C

GTN03 L — 2970 Nm

	i	M_{n2} [Nm]						P_1	P_{TB}	n_1	n_{1max}	M_b		M_{2max}
		$n_2 \cdot h$	$n_2 \cdot h$	$n_2 \cdot h$	$n_2 \cdot h$	$n_2 \cdot h$	$n_2 \cdot h$							
	1:	10000	25000	50000	100000	500000	1000000	[kW]	[kW]	[min-1]	[min-1]	[Nm]		[Nm]
L2	15.3	2410	2310	2310	2310	2100	1700	20	13.5	2000	4000	260	4F	5200
	18.1	2970	2810	2810	2650	2350	1910	20	13.7	2000	4000	260	4F	5200
	20.8	2410	2210	2210	2210	2030	1650	20	12.0	2000	4000	160	4D	5200
	22.7	2850	2520	2230	2200	2140	2030	20	12.5	2000	4000	160	4D	5200
	24.5	2770	2700	2650	2620	2280	1850	20	12.1	2000	4000	160	4D	5200
	26.4	2440	2080	1840	1820	1820	1820	15.2	11.2	2000	4000	160	4D	5200
	30.8	2850	2520	2230	2200	2140	2030	15.9	11.2	2000	4000	160	4D	5200
	35.8	2440	2080	1840	1820	1820	1820	11.2	10.1	2000	4000	100	4B	5200
	38.4	2850	2450	2230	2200	2140	2030	12.8	10.0	2000	4000	100	4B	5200
	44.6	2440	2080	1840	1820	1820	1820	9.2	9.2	2000	4000	100	4B	5200
	55.8	2300	2080	1840	1820	1820	1820	7.6	8.7	2000	4000	100	4B	5200
L3	53.4	2410	2310	2310	2310	2100	1700	9.3	8.2	2000	4000	100	4B	5200
	63.1	2970	2810	2810	2650	2390	1940	9.8	8.6	2000	4000	100	4B	5200
	72.3	2410	2310	2310	2310	2130	1730	7.0	8.0	2000	4000	50	4A	5200
	77.2	2970	2810	2810	2650	2350	1910	8.2	8.6	2000	4000	50	4A	5200
	90.2	2410	2310	2310	2310	2130	1730	5.6	7.4	2000	4000	50	4A	5200
	105	2970	2810	2810	2650	2350	1910	6.2	8.0	2000	4000	50	4A	5200
	113	2440	2080	1840	1820	1820	1820	4.4	7.4	2000	4000	50	4A	5200
	124	2440	2080	1840	1820	1820	1820	4.0	7.0	2000	4000	50	4A	5200
	141	2770	2700	2650	2620	2280	1850	4.4	7.1	2000	4000	50	4A	5200
	152	2440	2080	1840	1820	1820	1820	3.4	7.0	2000	4000	50	4A	5200
	164	2850	2520	2230	2200	2140	2030	3.9	7.0	2000	4000	50	4A	5200
	178	2850	2520	2230	2200	2140	2030	3.6	6.7	2000	4000	50	4A	5200
	190	2440	2080	1840	1820	1820	1820	2.8	6.6	2000	4000	50	4A	5200
	220	2250	2200	2250	2250	1830	1800	2.3	6.0	2000	4000	50	4A	5200
	258	2440	2080	1840	1820	1820	1820	2.0	5.9	2000	4000	50	4A	5200
	276	2850	2450	2230	2200	2140	2030	2.4	5.8	2000	4000	50	4A	5200
	321	2440	2080	1840	1820	1820	1820	1.6	5.4	2000	4000	50	4A	5200
	389	2000	1750	1650	1650	1650	1500	1.2	5.2	2000	4000	50	4A	5200
	402	2440	2080	1840	1820	1820	1820	1.3	5.3	2000	4000	50	4A	5200
L4	413	2850	2520	2230	2200	2140	2030	1.6	5.8	2000	4000	50	4A	5200
	446	2970	2810	2810	2650	2350	1910	1.5	5.8	2000	4000	50	4A	5200
	492	2770	2700	2650	2620	2280	1850	1.3	5.4	2000	4000	50	4A	5200
	556	2970	2810	2810	2650	2350	1910	1.2	5.5	2000	4000	50	4A	5200
	649	2410	2310	2310	2310	2130	1730	0.84	4.7	2000	4000	50	4A	5200
	718	2440	2080	1840	1820	1820	1820	0.76	4.9	2000	4000	50	4A	5200
	816	2770	2700	2650	2620	2280	1850	0.80	4.9	2000	4000	50	4A	5200
	896	2440	2080	1840	1820	1820	1820	0.61	4.7	2000	4000	50	4A	5200
	1018	2770	2700	2650	2620	2280	1850	0.64	4.7	2000	4000	50	4A	5200
	1098	2440	2080	1840	1820	1820	1820	0.50	4.6	2000	4000	50	4A	5200
	1278	2850	2520	2230	2200	2140	2030	0.53	4.5	2000	4000	50	4A	5200
	1370	2440	2080	1840	1820	1820	1820	0.40	4.4	2000	4000	50	4A	5200
	1586	2250	2250	2250	2250	1830	1800	0.34	4.2	2000	4000	50	4A	5200
	1854	2440	2080	1840	1820	1820	1820	0.29	4.2	2000	4000	50	4A	5200
	1991	2850	2450	2230	2200	2140	2030	0.34	4.1	2000	4000	50	4A	5200
	2243	2000	1750	1650	1650	1650	1500	0.21	4.1	2000	4000	50	4A	5200
	2799	2000	1750	1650	1650	1650	1500	0.17	4.0	2000	4000	50	4A	5200

GTN04 L — 3960 Nm

	i	M_{n2} [Nm]						P_1	P_{TB}	n_1	n_{1max}	M_b		M_{2max}
		$n_2 \cdot h$	$n_2 \cdot h$	$n_2 \cdot h$	$n_2 \cdot h$	$n_2 \cdot h$	$n_2 \cdot h$							
	1:	10000	25000	50000	100000	500000	1000000	[kW]	[kW]	[min-1]	[min-1]	[Nm]		[Nm]
L1	3.60	3710	3520	3500	3440	3120	2830	50	*	1800	3800	800	5G	7300
	4.25	3960	3750	3690	3540	3430	2780	50	*	1800	3800	800	5G	7300
	5.33	3740	3190	2850	2850	2850	2710	50	*	1800	3800	630	5E	7300
	6.57	3000	2560	2390	2390	2390	2390	50	*	1800	3800	500	5C	7300
L2	12.5	3710	3520	3500	3440	3120	2830	30	12.9	2000	4000	260	4F	7300

C

GTN04 L — 3960 Nm

	i	M_{n2} [Nm]						P_1	P_{TB}	n_1	n_{1max}	M_b		M_{2max}
		$n_2 \cdot h$	$n_2 \cdot h$	$n_2 \cdot h$	$n_2 \cdot h$	$n_2 \cdot h$	$n_2 \cdot h$							
	1:	10000	25000	50000	100000	500000	1000000	[kW]	[kW]	[min-1]	[min-1]	[Nm]		[Nm]
L2	15.3	3710	3520	3500	3440	3120	2830	30	13.9	2000	4000	260	4F	7300
	18.1	3960	3750	3690	3540	3430	2780	30	14.2	2000	4000	260	4F	7300
	20.8	3710	3520	3500	3440	3120	2830	30	12.4	2000	4000	160	4D	7300
	22.7	3740	3190	2850	2850	2850	2710	28	13.0	2000	4000	160	4D	7300
	24.5	3960	3750	3690	3540	3430	2780	30	12.5	2000	4000	160	4D	7300
	30.8	3740	3190	2850	2850	2850	2710	20	11.6	2000	4000	160	4D	7300
	38.4	3740	3190	2850	2850	2850	2710	16.2	10.4	2000	4000	160	4D	7300
	47.3	3000	2560	2390	2390	2390	2390	10.9	9.0	2000	4000	100	4B	7300
	59.1	3000	2560	2390	2390	2390	2390	8.9	8.7	2000	4000	100	4B	7300
L3	43.6	3710	3520	3500	3440	3120	2830	18.4	8.5	2000	4000	50	4A	7300
	53.4	3710	3520	3500	3440	3120	2830	15.1	8.6	2000	4000	50	4A	7300
	63.1	3960	3750	3690	3540	3430	2780	13.4	8.7	2000	4000	50	4A	7300
	72.3	3710	3520	3500	3440	3120	2830	11.2	7.8	2000	4000	50	4A	7300
	77.2	3960	3750	3690	3540	3430	2780	11.0	9.1	2000	4000	50	4A	7300
	90.2	3710	3520	3500	3440	3080	2830	9.0	7.1	2000	4000	50	4A	7300
	105	3960	3750	3690	3540	3430	2780	8.4	8.5	2000	4000	50	4A	7300
	111	3710	3520	3500	3440	3120	2830	7.5	7.8	2000	4000	50	4A	7300
	130	3960	3750	3690	3540	3430	2780	6.8	7.9	2000	4000	50	4A	7300
	141	3960	3750	3690	3540	3430	2780	6.3	7.5	2000	4000	50	4A	7300
	150	3710	3520	3500	3440	3120	2830	5.6	7.0	2000	4000	50	4A	7300
	165	3000	2560	2390	2390	2390	2390	3.8	6.7	2000	4000	50	4A	7300
	178	3740	3190	2850	2850	2850	2710	4.5	7.1	2000	4000	50	4A	7300
	202	3000	2560	2390	2390	2390	2390	3.1	6.6	2000	4000	50	4A	7300
	220	3960	3710	3660	3540	3430	2780	4.1	6.4	2000	4000	50	4A	7300
	273	3000	2560	2390	2390	2390	2390	2.3	6.0	2000	4000	50	4A	7300
	341	3000	2560	2390	2390	2390	2390	1.8	5.8	2000	4000	50	4A	7300
	426	3000	2560	2390	2390	2390	2390	1.5	5.4	2000	4000	50	4A	7300
L4	413	3740	3190	2850	2850	2850	2710	2.0	6.2	2000	4000	50	4A	7300
	446	3960	3750	3690	3540	3430	2780	2.1	5.9	2000	4000	50	4A	7300
	492	3960	3750	3690	3540	3430	2780	1.9	5.3	2000	4000	50	4A	7300
	556	3960	3750	3690	3540	3430	2780	1.7	5.8	2000	4000	50	4A	7300
	649	3710	3520	3500	3440	3120	2830	1.4	4.9	2000	4000	50	4A	7300
	702	3000	2560	2390	2390	2390	2390	0.93	5.1	2000	4000	50	4A	7300
	816	3960	3750	3690	3540	3430	2780	1.1	5.1	2000	4000	50	4A	7300
	1018	3960	3750	3690	3540	3430	2780	0.92	4.9	2000	4000	50	4A	7300
	1164	3000	2560	2390	2390	2390	2390	0.56	4.7	2000	4000	50	4A	7300
	1271	3960	3750	3690	3540	3430	2780	0.74	4.6	2000	4000	50	4A	7300
	1344	3710	3520	3500	3440	3080	2830	0.65	4.3	2000	4000	50	4A	7300
	1586	3960	3710	3660	3540	3430	2780	0.59	4.4	2000	4000	50	4A	7300
	1815	3000	2560	2390	2390	2390	2390	0.36	4.4	2000	4000	50	4A	7300
	1991	3740	3190	2850	2850	2850	2710	0.42	4.2	2000	4000	50	4A	7300
	2269	3000	2560	2390	2390	2390	2390	0.29	4.3	2000	4000	50	4A	7300
	2453	3000	2560	2390	2390	2390	2390	0.27	4.0	2000	4000	50	4A	7300

GTN05 L — 5800 Nm

	i	M_{n2} [Nm]						P_1	P_{TB}	n_1	n_{1max}	M_b		M_{2max}
		$n_2 \cdot h$	$n_2 \cdot h$	$n_2 \cdot h$	$n_2 \cdot h$	$n_2 \cdot h$	$n_2 \cdot h$							
	1:	10000	25000	50000	100000	500000	1000000	[kW]	[kW]	[min-1]	[min-1]	[Nm]		[Nm]
L1	3.60	4700	4490	4490	4490	4480	3640	60	*	1800	3800	1000	5K	8800
	4.25	5800	5500	5480	5300	4410	3580	60	*	1800	3800	1000	5K	8800
	5.33	5600	5040	4470	4400	4280	3490	60	*	1800	3800	1000	5K	8800
	6.20	4690	4000	3600	3600	3550	3460	60	*	1800	3800	800	5G	8800
	7.50	3800	3300	3100	3100	3000	2790	60	*	1800	3800	630	5E	8800
L2	12.5	4700	4490	4490	4490	3800	3090	30	13.3	2000	4000	400	4K	8800
	15.3	4700	4490	4490	4490	3750	3040	30	14.3	2000	4000	330	4H	8800
	18.1	5800	5500	5480	5300	4210	3420	30	14.9	2000	4000	400	4K	8800
	20.8	4700	4450	4430	4430	3630	2950	30	12.9	2000	4000	260	4F	8800

C

GTN05 L — 5800 Nm

	i	M_{n2} [Nm]						P_1	P_{TB}	n_1	n_{1max}	M_b		M_{2max}
		$n_2 \cdot h$	$n_2 \cdot h$	$n_2 \cdot h$	$n_2 \cdot h$	$n_2 \cdot h$	$n_2 \cdot h$							
	1:	10000	25000	50000	100000	500000	1000000	[kW]	[kW]	[min-1]	[min-1]	[Nm]		[Nm]
L2	22.7	5600	5040	4470	4400	4280	3490	30	13.9	2000	4000	330	4H	8800
	24.5	5530	5400	5300	5230	4070	3310	30	13.3	2000	4000	330	4H	8800
	26.4	4690	4000	3600	3600	3550	3460	30	12.5	2000	4000	260	4F	8800
	30.8	5600	5040	4470	4400	4280	3490	30	12.3	2000	4000	260	4F	8800
	35.8	4690	4000	3600	3600	3550	3460	22.4	11.2	2000	4000	160	4D	8800
	38.4	5600	4900	4470	4400	4280	3490	25.5	11.0	2000	4000	160	4D	8800
	44.6	4690	4000	3600	3600	3550	3460	18.3	10.1	2000	4000	160	4D	8800
	55.8	4430	4000	3600	3600	3500	3460	15.2	9.7	2000	4000	160	4D	8800
L3	53.4	4700	4490	4490	4490	3750	3040	18.8	9.1	2000	4000	100	4B	8800
	63.1	5800	5480	5480	5300	4270	3470	19.4	9.5	2000	4000	160	4D	8800
	72.3	4700	4490	4490	4490	3800	3090	14.1	8.8	2000	4000	100	4B	8800
	77.2	5800	5500	5480	5300	4210	3420	16.3	9.6	2000	4000	100	4B	8800
	90.2	4700	4490	4490	4490	3800	3090	11.4	8.2	2000	4000	100	4B	8800
	105	5800	5500	5480	5300	4210	3420	12.3	8.9	2000	4000	100	4B	8800
	113	4690	4000	3600	3600	3550	3460	8.7	8.4	2000	4000	100	4B	8800
	124	4690	4000	3600	3600	3550	3460	8.0	7.8	2000	4000	50	4A	8800
	141	5530	5350	5300	5230	4070	3310	8.9	7.9	2000	4000	100	4B	8800
	152	4690	4000	3600	3600	3550	3460	6.7	7.8	2000	4000	50	4A	8800
	164	5600	5040	4470	4400	4280	3490	7.7	7.8	2000	4000	50	4A	8800
	178	5600	5040	4470	4400	4280	3490	7.2	7.5	2000	4000	50	4A	8800
	190	4690	4000	3600	3600	3550	3460	5.5	7.3	2000	4000	50	4A	8800
	220	4750	4750	4750	4750	3660	3210	4.9	6.7	2000	4000	50	4A	8800
	258	4690	4000	3600	3600	3550	3460	4.1	6.6	2000	4000	50	4A	8800
	276	5600	4900	4470	4400	4280	3490	4.6	6.4	2000	4000	50	4A	8800
	321	4690	4000	3600	3600	3550	3460	3.3	6.1	2000	4000	50	4A	8800
	389	3800	3300	3100	3100	3000	2790	2.2	5.8	2000	4000	50	4A	8800
	402	4690	4000	3600	3600	3550	3460	2.6	5.9	2000	4000	50	4A	8800
L4	413	5600	5040	4470	4400	4280	3490	3.2	6.4	2000	4000	50	4A	8800
	446	5800	5500	5480	5300	4210	3420	3.1	6.4	2000	4000	50	4A	8800
	492	5530	5350	5300	5230	4070	3310	2.6	5.9	2000	4000	50	4A	8800
	556	5800	5500	5480	5300	4210	3420	2.5	6.0	2000	4000	50	4A	8800
	649	4700	4490	4490	4490	3800	3090	1.7	5.1	2000	4000	50	4A	8800
	718	4690	4000	3600	3600	3550	3460	1.5	5.3	2000	4000	50	4A	8800
	816	5530	5350	5300	5230	4070	3310	1.6	5.3	2000	4000	50	4A	8800
	896	4690	4000	3600	3600	3550	3460	1.2	5.1	2000	4000	50	4A	8800
	1018	5530	5350	5300	5230	4070	3310	1.3	5.1	2000	4000	50	4A	8800
	1098	4690	4000	3600	3600	3550	3460	0.99	4.9	2000	4000	50	4A	8800
	1278	5600	5040	4470	4400	4280	3490	1.0	4.9	2000	4000	50	4A	8800
	1370	4690	4000	3600	3600	3550	3460	0.79	4.7	2000	4000	50	4A	8800
	1586	4750	4750	4750	4750	3660	3210	0.71	4.5	2000	4000	50	4A	8800
	1854	4690	4000	3600	3600	3550	3460	0.59	4.4	2000	4000	50	4A	8800
	1991	5600	4900	4470	4400	4280	3490	0.67	4.3	2000	4000	50	4A	8800
	2243	3800	3300	3100	3100	3000	2790	0.40	4.3	2000	4000	50	4A	8800
	2799	3800	3300	3100	3100	3000	2790	0.32	4.1	2000	4000	50	4A	8800

GTN06 L — 10840 Nm

	i	M_{n2} [Nm]						P_1	P_{TB}	n_1	n_{1max}	M_b		M_{2max}
		$n_2 \cdot h$	$n_2 \cdot h$	$n_2 \cdot h$	$n_2 \cdot h$	$n_2 \cdot h$	$n_2 \cdot h$							
	1:	10000	25000	50000	100000	500000	1000000	[kW]	[kW]	[min-1]	[min-1]	[Nm]		[Nm]
L1	3.60	10840	10380	10380	10380	7100	5770	75	*	1600	3000	2600	6K	14900
	4.25	10420	9850	9850	9600	6990	5680	75	*	1600	3000	2600	6K	14900
	5.33	10080	9350	8300	7950	6810	5530	75	*	1600	3000	2100	6G	14900
	6.20	8630	7370	6530	6500	6460	5480	75	*	1600	3000	1500	6E	14900
	7.50	7000	5900	5500	5500	5040	5040	75	*	1600	3000	1100	6C	14900
L2	13.0	8020	8020	8020	8020	6210	5040	40	21.2	1800	3800	800	5G	14900
	15.3	9770	9340	9340	9300	6110	4960	40	22.8	1800	3800	800	5G	14900
	18.1	10420	9850	9850	9600	6860	5570	40	23.7	1800	3800	630	5E	14900

C

GTN06 L — 10840 Nm

	i	M_{n2} [Nm]						P_1	P_{TB}	n_1	n_{1max}	M_b		M_{2max}
		$n_2 \cdot h$	$n_2 \cdot h$	$n_2 \cdot h$	$n_2 \cdot h$	$n_2 \cdot h$	$n_2 \cdot h$							
	1:	10000	25000	50000	100000	500000	1000000	[kW]	[kW]	[min^{-1}]	[min^{-1}]	[Nm]		[Nm]
L2	22.7	9560	9100	9100	9100	6680	5430	40	22.5	1800	3800	500	5C	14900
	26.4	7890	7590	7590	7590	6620	5380	40	20.4	1800	3800	400	5B	14900
	28.4	10080	9350	8300	7950	6810	5530	40	20.2	1800	3800	400	5B	14900
	33.1	9540	9350	8300	7950	6810	5530	40	18.5	1800	3800	400	5B	14900
	38.4	8630	7370	6530	6500	6460	5480	34	16.6	1800	3800	400	5B	14900
	46.5	8500	7370	6530	6500	6460	5480	29	15.5	1800	3800	400	5B	14900
	56.3	7000	5900	5500	5500	5040	5040	21	14.5	1800	3800	400	5B	14900
	72.5	6400	5900	5500	5500	5040	5040	16.3	12.6	1800	3800	400	5B	14900
L3	53.2	9770	9340	9340	9300	6110	4960	20	13.0	2000	4000	260	4F	14900
	65.2	9770	9340	9340	9300	6110	4960	20	13.4	2000	4000	160	4D	14900
	77.0	10420	9850	9850	9600	6860	5570	20	13.6	2000	4000	160	4D	14900
	81.9	8320	7700	7700	7530	5950	4830	20	12.5	2000	4000	160	4D	14900
	88.3	9450	9450	9450	9450	6970	5660	20	12.3	2000	4000	160	4D	14900
	104	10420	9850	9850	9600	6860	5570	20	12.3	2000	4000	160	4D	14900
	112	7890	7590	7590	7590	6620	5380	15.2	11.6	2000	4000	160	4D	14900
	121	10080	9350	8300	7950	6810	5530	17.2	11.7	2000	4000	100	4B	14900
	141	9540	9350	8300	7950	6810	5530	14.8	10.9	2000	4000	100	4B	14900
	152	7890	7590	7590	7590	6620	5380	11.3	10.6	2000	4000	100	4B	14900
	190	8630	7370	6530	6500	6460	5480	10.2	9.8	2000	4000	100	4B	14900
	205	10080	9350	8300	7950	6810	5530	10.6	9.9	2000	4000	100	4B	14900
	222	8630	7370	6530	6500	6460	5480	8.8	9.4	2000	4000	50	4A	14900
	238	9540	9350	8300	7950	6810	5530	9.0	9.3	2000	4000	50	4A	14900
	268	7000	5900	5500	5500	5040	5040	6.0	8.9	2000	4000	50	4A	14900
	288	7000	5900	5500	5500	5040	5040	5.6	8.9	2000	4000	50	4A	14900
	325	7000	5900	5500	5500	5040	5040	4.9	8.4	2000	4000	50	4A	14900
	405	7000	5900	5500	5500	5040	5040	4.0	7.9	2000	4000	50	4A	14900
L4	391	8630	7370	6530	6500	6460	5480	5.1	8.0	2000	4000	50	4A	14900
	444	10420	9850	9850	9600	6860	5570	5.3	8.1	2000	4000	50	4A	14900
	509	9450	9450	9450	9450	6970	5660	4.1	7.7	2000	4000	50	4A	14900
	589	10080	9350	8300	7950	6810	5530	3.8	7.6	2000	4000	50	4A	14900
	636	9450	9450	9450	9450	6970	5660	3.3	7.2	2000	4000	50	4A	14900
	700	10080	9350	8300	7950	6810	5530	3.2	7.6	2000	4000	50	4A	14900
	809	7890	7590	7590	7590	6620	5380	2.2	7.1	2000	4000	50	4A	14900
	877	7890	7590	7590	7590	6620	5380	2.0	6.9	2000	4000	50	4A	14900
	1015	9540	9350	8300	7950	6810	5530	2.2	6.8	2000	4000	50	4A	14900
	1095	7890	7590	7590	7590	6620	5380	1.6	6.5	2000	4000	50	4A	14900
	1279	8630	7370	6530	6500	6460	5480	1.6	6.3	2000	4000	50	4A	14900
	1475	10080	9350	8300	7950	6810	5530	1.5	6.1	2000	4000	50	4A	14900
	1597	8630	7370	6530	6500	6460	5480	1.3	5.9	2000	4000	50	4A	14900
	1843	10080	9350	8300	7950	6810	5530	1.2	5.9	2000	4000	50	4A	14900
	2074	7000	5900	5500	5500	5040	5040	0.80	5.7	2000	4000	50	4A	14900
	2337	7000	5900	5500	5500	5040	5040	0.71	5.6	2000	4000	50	4A	14900
	2916	7000	5900	5500	5500	5040	5040	0.57	5.2	2000	4000	50	4A	14900

GTN07 L — 15680 Nm

	i	M_{n2} [Nm]						P_1	P_{TB}	n_1	n_{1max}	M_b		M_{2max}
		$n_2 \cdot h$	$n_2 \cdot h$	$n_2 \cdot h$	$n_2 \cdot h$	$n_2 \cdot h$	$n_2 \cdot h$							
	1:	10000	25000	50000	100000	500000	1000000	[kW]	[kW]	[min^{-1}]	[min^{-1}]	[Nm]		[Nm]
L1	3.43	9000	9000	9000	9000	8300	7960	115	*	1500	2500	3200	6L	18600
	4.09	15680	14890	14890	13510	9560	7770	115	*	1500	2500	3200	6L	21000
	5.25	14840	12700	11300	10790	9340	7590	115	*	1500	2500	3200	6L	21000
	6.23	11000	9600	8700	8700	8240	7490	115	*	1500	2500	2100	6G	21000
L2	12.3	9000	9000	9000	9000	8300	7960	60	17.7	1800	3800	1000	5K	18600
	14.7	15680	14890	14890	13510	9560	7770	60	17.0	1800	3800	800	5G	21000
	17.4	15680	14890	14890	13510	9560	7770	60	21.2	1800	3800	1000	5K	21000
	21.8	15680	14890	14890	13510	9560	7770	60	21.8	1800	3800	800	5G	21000
	25.4	14670	14010	14010	13510	9560	7770	60	20.6	1800	3800	630	5E	21000

C

GTN07 L — 15680 Nm

	i	M_{n2} [Nm]						P_1	P_{TB}	n_1	n_{1max}	M_b		M_{2max}
		$n_2 \cdot h$	$n_2 \cdot h$	$n_2 \cdot h$	$n_2 \cdot h$	$n_2 \cdot h$	$n_2 \cdot h$							
	1:	10000	25000	50000	100000	500000	1000000	[kW]	[kW]	[min-1]	[min-1]	[Nm]		[Nm]
L2	28.0	14840	12700	11300	10790	9340	7590	60	21.2	1800	3800	500	5C	21000
	30.7	12300	12300	12300	12300	9560	7770	60	19.5	1800	3800	500	5C	21000
	32.6	14840	12700	11300	10790	9340	7590	60	19.9	1800	3800	500	5C	21000
	38.6	11000	9600	8700	8700	8240	7490	46	18.0	1800	3800	400	5B	21000
	46.7	11000	9600	8700	8700	8240	7490	39	17.0	1800	3800	400	5B	21000
L3	51.3	15680	14890	14890	13510	9560	7770	30	14.4	2000	4000	330	4H	21000
	60.5	15680	14890	14890	13510	9560	7770	30	14.5	2000	4000	330	4H	21000
	74.1	15680	14890	14890	13510	9560	7770	30	15.1	2000	4000	260	4F	21000
	80.6	14840	12700	11300	10790	9340	7590	30	14.3	2000	4000	260	4F	21000
	93.0	15680	14890	14890	13510	9560	7770	30	14.2	2000	4000	260	4F	21000
	100	15680	14890	14890	13510	9560	7770	30	13.8	2000	4000	260	4F	21000
	113	14840	12700	11300	10790	9340	7590	26	12.5	2000	4000	160	4D	21000
	126	15680	14890	14890	13510	9560	7770	26	13.0	2000	4000	160	4D	21000
	139	14840	12700	11300	10790	9340	7590	22	12.8	2000	4000	160	4D	21000
	146	15000	14010	14010	13510	9560	7770	23	12.1	2000	4000	160	4D	21000
	162	14840	12700	11300	10790	9340	7590	19.4	12.5	2000	4000	100	4B	21000
	177	12300	12300	12300	12300	9560	7770	15.9	11.3	2000	4000	100	4B	21000
	202	14840	12700	11300	10790	9340	7590	15.9	11.5	2000	4000	100	4B	21000
	221	15000	13800	12900	12500	9560	7770	15.6	10.5	2000	4000	100	4B	21000
	239	11000	9600	8700	8700	8240	7490	10.5	10.8	2000	4000	50	4A	21000
	284	14330	12700	11300	10790	9340	7590	11.3	10.2	2000	4000	50	4A	21000
	336	11000	9600	8700	8700	8240	7490	7.5	9.6	2000	4000	50	4A	21000
L4	349	15680	14890	14890	13510	9560	7770	10.2	9.8	2000	4000	50	4A	21000
	406	14840	12700	11300	10790	9340	7590	8.2	10.1	2000	4000	50	4A	21000
	465	14840	12700	11300	10790	9340	7590	7.1	9.4	2000	4000	50	4A	21000
	509	15000	14010	14010	13510	9560	7770	7.0	8.4	2000	4000	50	4A	21000
	579	15680	14890	14890	13510	9560	7770	6.1	8.8	2000	4000	50	4A	21000
	654	14840	12700	11300	10790	9340	7590	5.1	8.6	2000	4000	50	4A	21000
	722	15680	14890	14890	13510	9560	7770	4.9	8.2	2000	4000	50	4A	21000
	801	14840	12700	11300	10790	9340	7590	4.1	8.5	2000	4000	50	4A	21000
	906	15680	14890	14890	13510	9560	7770	3.9	7.9	2000	4000	50	4A	21000
	999	14840	12700	11300	10790	9340	7590	3.3	8.0	2000	4000	50	4A	21000
	1157	14840	12700	11300	10790	9340	7590	2.9	7.5	2000	4000	50	4A	21000
	1274	12300	12300	12300	12300	9560	7770	2.3	7.1	2000	4000	50	4A	21000
	1408	15680	14890	14890	13510	9560	7770	2.5	7.1	2000	4000	50	4A	21000
	1591	15000	13800	12900	12500	9560	7770	2.2	6.6	2000	4000	50	4A	21000
	1767	15680	14890	14890	13510	9560	7770	2.0	6.8	2000	4000	50	4A	21000
	2041	14330	12700	11300	10790	9340	7590	1.6	6.5	2000	4000	50	4A	21000
	2423	11000	9600	8700	8700	8240	7490	1.1	6.2	2000	4000	50	4A	21000

GTN09 L — 23240 Nm

	i	M_{n2} [Nm]						P_1	P_{TB}	n_1	n_{1max}	M_b		M_{2max}
		$n_2 \cdot h$	$n_2 \cdot h$	$n_2 \cdot h$	$n_2 \cdot h$	$n_2 \cdot h$	$n_2 \cdot h$							
	1:	10000	25000	50000	100000	500000	1000000	[kW]	[kW]	[min-1]	[min-1]	[Nm]		[Nm]
L1	3.43	13000	13000	13000	13000	12310	10920	150	*	1500	2000	3200	6L	27900
	4.09	23240	22070	22070	20260	13120	10660	150	*	1500	2000	3200	6L	29000
	5.25	21980	19060	16940	16190	12810	10410	150	*	1500	2000	3200	6L	29000
	6.23	17000	14400	13000	13000	12370	10280	150	*	1500	2000	3200	6L	29000
L2	12.3	13000	13000	13000	13000	10290	8360	60	25.7	1800	3800	1000	5K	27900
	14.7	17730	17730	17730	17730	11650	9460	60	25.4	1800	3800	1000	5K	29000
	17.4	21620	21260	21260	18580	11460	9310	60	30	1800	3800	1000	5K	29000
	21.8	18510	17500	17500	17140	11160	9070	60	30	1800	3800	1000	5K	29000
	25.4	14670	14300	14300	14300	11060	8990	60	28.4	1800	3800	800	5G	29000
	28.0	21980	19060	16940	16190	12810	10410	60	29.7	1800	3800	800	5G	29000
	32.6	18300	18100	16940	16190	12810	10410	60	27.6	1800	3800	630	5E	29000
	38.6	17000	14400	13000	13000	12370	10280	60	25.1	1800	3800	500	5C	29000
	46.7	17000	14400	13000	13000	12370	10280	58	23.5	1800	3800	400	5B	29000

C

GTN09 L — 23240 Nm

	i	M_{n2} [Nm]						P_1	P_{TB}	n_1	n_{1max}	M_b		M_{2max}
		$n_2 \cdot h$	$n_2 \cdot h$	$n_2 \cdot h$	$n_2 \cdot h$	$n_2 \cdot h$	$n_2 \cdot h$							
	1:	10000	25000	50000	100000	500000	1000000	[kW]	[kW]	[min-1]	[min-1]	[Nm]		[Nm]
L3	51.3	17730	17730	17730	17730	11650	9460	30	20.2	2000	4000	400	4K	29000
	60.5	21620	21260	21260	18580	11460	9310	30	20.3	2000	4000	400	4K	29000
	74.1	21620	21260	21260	18580	11460	9310	30	20.7	2000	4000	260	4F	29000
	80.6	21980	19060	16940	16190	12810	10410	30	19.9	2000	4000	260	4F	29000
	93.0	18510	17500	17500	17140	11160	9070	30	19.3	2000	4000	260	4F	29000
	100	21620	21260	21260	18580	11460	9310	30	18.6	2000	4000	260	4F	29000
	113	18300	18100	16940	16190	12810	10410	30	17.1	2000	4000	260	4F	29000
	126	18510	17500	17500	17140	11160	9070	30	17.4	2000	4000	260	4F	29000
	139	18300	18100	16940	16190	12810	10410	30	17.2	2000	4000	160	4D	29000
	162	21980	19060	16940	16190	12810	10410	29	16.9	2000	4000	160	4D	29000
	183	14670	14300	14300	14300	11060	8990	18.2	14.8	2000	4000	100	4B	29000
	202	21980	19060	16940	16190	12810	10410	23.9	15.4	2000	4000	100	4B	29000
	223	17000	14400	13000	13000	12370	10280	17.5	14.7	2000	4000	100	4B	29000
	239	17000	14400	13000	13000	12370	10280	16.3	14.5	2000	4000	100	4B	29000
	284	15800	15800	15800	15000	12810	10410	12.8	13.6	2000	4000	100	4B	29000
	336	17000	14400	13000	13000	12370	10280	11.6	12.8	2000	4000	100	4B	29000
L4	349	21620	21260	21260	18580	11460	9310	14.4	12.7	2000	4000	100	4B	29000
	406	21980	19060	16940	16190	12810	10410	12.3	13.3	2000	4000	50	4A	29000
	465	21980	19060	16940	16190	12810	10410	10.7	12.3	2000	4000	50	4A	29000
	509	14670	14300	14300	14300	11060	8990	6.7	11.0	2000	4000	50	4A	29000
	579	21620	21260	21260	18580	11460	9310	8.7	11.4	2000	4000	50	4A	29000
	654	18300	18100	16940	16190	12810	10410	6.6	11.2	2000	4000	50	4A	29000
	722	21620	21260	21260	18580	11460	9310	7.0	10.6	2000	4000	50	4A	29000
	801	18300	18100	16940	16190	12810	10410	5.4	11.0	2000	4000	50	4A	29000
	906	18510	17500	17500	17140	11160	9070	4.7	10.2	2000	4000	50	4A	29000
	999	18300	18100	16940	16190	12810	10410	4.3	10.3	2000	4000	50	4A	29000
	1149	17000	14400	13000	13000	12370	10280	3.5	9.9	2000	4000	50	4A	29000
	1286	17000	14400	13000	13000	12370	10280	3.1	9.6	2000	4000	50	4A	29000
	1380	17000	14400	13000	13000	12370	10280	2.9	9.4	2000	4000	50	4A	29000
	1605	17000	14400	13000	13000	12370	10280	2.5	9.0	2000	4000	50	4A	29000
	1723	17000	14400	13000	13000	12370	10280	2.3	8.9	2000	4000	50	4A	29000
	2003	17000	14400	13000	13000	12370	10280	1.9	8.4	2000	4000	50	4A	29000
	2423	17000	14400	13000	13000	12370	10280	1.7	8.0	2000	4000	50	4A	29000

GTN10 L — 33640 Nm

	i	M_{n2} [Nm]						P_1	P_{TB}	n_1	n_{1max}	M_b		M_{2max}
		$n_2 \cdot h$	$n_2 \cdot h$	$n_2 \cdot h$	$n_2 \cdot h$	$n_2 \cdot h$	$n_2 \cdot h$							
	1:	10000	25000	50000	100000	500000	1000000	[kW]	[kW]	[min-1]	[min-1]	[Nm]		[Nm]
L1	4.09	33640	31900	29360	26490	21190	17220	175	*	1750	1800	—	—	47600
	5.25	30110	25640	22700	21660	20710	16820	175	*	1750	1800	—	—	47600
	6.23	23930	20350	18000	17810	17810	16620	175	*	1750	1800	—	—	47600
L2	14.7	33640	31900	29360	26490	18470	15000	75	27.5	1750	3000	2600	6K	47600
	17.4	33640	31900	29360	26490	18180	14770	75	34	1750	3000	2100	6G	47600
	21.8	33170	30650	29360	26490	17700	14380	75	36	1750	3000	2100	6G	47600
	25.4	26060	24860	24860	24860	17540	14250	75	34	1750	3000	1500	6E	47600
	28.0	30110	25640	22700	21660	20710	16820	75	35	1750	3000	1500	6E	47600
	30.7	19480	19330	19330	19330	17120	13900	75	33	1750	3000	1050	6C	47600
	32.6	30110	25640	22700	21660	20710	16820	75	33	1750	3000	1050	6C	47600
	38.6	23930	20350	18000	17810	17810	16620	75	28.8	1750	3000	850	6B	47600
	46.7	23930	20350	18000	17810	17810	16620	75	27.8	1750	3000	850	6B	47600
L3	53.0	30730	30730	29360	26160	16140	13110	40	26.1	1800	3800	630	5E	47600
	62.6	33640	31900	29360	25750	15890	12910	40	26.8	1800	3800	630	5E	47600
	73.9	33640	31900	29360	26490	17850	14500	40	27.2	1800	3800	500	5C	47600
	80.3	30110	25640	22700	21660	18920	15370	40	25.5	1800	3800	400	5B	47600
	92.7	33640	31900	29350	26250	17380	14110	40	25.9	1800	3800	400	5B	47600
	101	30110	25640	22700	21660	18420	14960	40	24.4	1800	3800	400	5B	47600
	108	28060	28060	28060	26500	17220	13990	40	24.1	1800	3800	400	5B	47600

C

GTN10 L — 33640 Nm

	i	M_{n2} [Nm]						P_1	P_{TB}	n_1	n_{1max}	M_b		M_{2max}
		$n_2 \cdot h$	$n_2 \cdot h$	$n_2 \cdot h$	$n_2 \cdot h$	$n_2 \cdot h$	$n_2 \cdot h$							
	1:	10000	25000	50000	100000	500000	1000000	[kW]	[kW]	[min^{-1}]	[min^{-1}]	[Nm]		[Nm]
L3	119	30110	25640	22700	21660	20710	16820	40	23.8	1800	3800	400	5B	47600
	135	33170	30640	29350	26500	17700	14380	40	22.4	1800	3800	400	5B	47600
	149	30110	25640	22700	21660	20710	16820	40	22.8	1800	3800	400	5B	47600
	164	27150	27150	27150	26490	17700	14380	34	21.0	1800	3800	400	5B	47600
	177	23930	20350	18000	17810	17810	16620	28	20.6	1800	3800	400	5B	47600
	202	30110	25640	22700	21660	20710	16820	31	19.9	1800	3800	400	5B	47600
	230	19480	19330	19330	19330	17120	13900	17.5	18.5	1800	3800	400	5B	47600
	249	23930	20350	18000	17810	17810	16620	20	18.4	1800	3800	400	5B	47600
	295	24820	24820	22700	21660	20380	16550	17.4	17.8	1800	3800	400	5B	47600
	350	23930	20350	18000	17810	17810	16620	14.1	16.4	1800	3800	400	5B	47600
L4	392	23930	20350	18000	17810	17810	16620	14.5	15.4	2000	4000	100	4B	47600
	453	28950	28950	28950	25070	15470	12570	15.1	15.0	2000	4000	100	4B	47600
	507	30110	25640	22700	21660	20710	16820	14.0	15.8	2000	4000	100	4B	47600
	590	30110	25640	22700	21660	20510	16600	12.1	14.8	2000	4000	100	4B	47600
	637	30110	25640	22700	21660	20710	16820	11.2	14.9	2000	4000	100	4B	47600
	726	30110	25640	22700	21660	18420	14960	9.8	13.4	2000	4000	50	4A	47600
	798	30110	25640	22700	21660	20510	16660	8.9	13.7	2000	4000	50	4A	47600
	974	33170	30640	29350	26500	17700	14380	8.1	12.4	2000	4000	50	4A	47600
	1002	30110	25640	22700	21660	20710	16820	7.1	13.0	2000	4000	50	4A	47600
	1164	30110	25640	22700	21660	20710	16820	6.1	12.3	2000	4000	50	4A	47600
	1259	24820	24820	22700	21660	20380	16550	4.7	11.9	2000	4000	50	4A	47600
	1438	23930	20350	18000	17810	17810	16620	3.9	11.4	2000	4000	50	4A	47600
	1672	23930	20350	18000	17810	17810	16620	3.4	10.9	2000	4000	50	4A	47600
	1794	23930	20350	18000	17810	17810	16620	3.2	10.7	2000	4000	50	4A	47600
	2022	23930	20350	18000	17810	17810	16620	2.8	10.4	2000	4000	50	4A	47600
	2523	23930	20350	18000	17810	17810	16620	2.2	9.9	2000	4000	50	4A	47600

GTN11 L — 49210 Nm

	i	M_{n2} [Nm]						P_1	P_{TB}	n_1	n_{1max}	M_b		M_{2max}
		$n_2 \cdot h$	$n_2 \cdot h$	$n_2 \cdot h$	$n_2 \cdot h$	$n_2 \cdot h$	$n_2 \cdot h$							
	1:	10000	25000	50000	100000	500000	1000000	[kW]	[kW]	[min^{-1}]	[min^{-1}]	[Nm]		[Nm]
L1	4.09	49210	46590	45450	41050	30210	24540	200	*	1500	1800	—	—	58300
	5.25	47810	41400	36690	35010	29500	23960	200	*	1500	1800	—	—	58300
	6.23	36470	31040	27480	27190	27190	23670	200	*	1500	1800	—	—	58300
L2	14.0	32420	32420	32420	32420	25490	20710	115	32	1500	2500	3200	6L	58300
	16.7	49210	46590	45450	40310	24870	20200	115	38	1500	2500	3200	6L	58300
	18.0	41500	41400	36690	35010	29500	23960	115	31	1500	2500	2600	6K	58300
	21.5	47810	41400	36690	35010	23030	18700	115	37	1500	2500	2600	6K	58300
	25.5	33520	32020	32020	32020	23990	19490	115	41	1500	2500	1500	6E	58300
	27.6	47810	41400	36690	35010	28930	23490	115	41	1500	2500	2100	6G	58300
	32.7	41250	41170	36690	35010	28570	23200	115	40	1500	2500	1500	6E	58300
	38.8	36470	31040	27480	27190	27190	23670	115	37	1500	2500	1500	6E	58300
L3	50.5	32420	32420	32420	32420	25490	20710	60	26.8	1800	3800	800	5G	58300
	60.2	49210	46590	45450	40310	24870	20200	60	25.9	1800	3800	1000	5K	58300
	71.1	49210	46590	45450	40310	24870	20200	60	28.2	1800	3800	800	5G	58300
	77.3	47810	41400	36690	35010	29500	23960	60	24.8	1800	3800	800	5G	58300
	89.3	49210	46590	45450	40310	24870	20200	60	27.8	1800	3800	800	5G	58300
	104	49210	46590	45450	40310	24870	20200	60	26.4	1800	3800	800	5G	58300
	115	47810	41400	36690	35010	29500	23960	60	26.6	1800	3800	500	5C	58300
	133	47810	41400	36690	35010	29500	23960	60	25.2	1800	3800	400	5B	58300
	147	47810	41400	36690	35010	28930	23490	60	25.5	1800	3800	400	5B	58300
	161	47810	41400	36690	35010	29500	23960	60	24.0	1800	3800	400	5B	58300
	171	47810	41400	36690	35010	28930	23490	58	24.3	1800	3800	400	5B	58300
	191	33520	32020	32020	32020	23990	19490	36	22.5	1800	3800	400	5B	58300
	203	41250	41170	36690	35010	28570	23200	42	22.6	1800	3800	400	5B	58300
	245	41250	41170	36690	35010	28570	23200	35	21.6	1800	3800	400	5B	58300
	291	36470	31040	27480	27190	27190	23670	26	20.5	1800	3800	400	5B	58300

C

GTN11 L — 49210 Nm

	i	M_{n2} [Nm]						P_1	P_{TB}	n_1	n_{1max}	M_b		M_{2max}
		$n_2 \cdot h$	$n_2 \cdot h$	$n_2 \cdot h$	$n_2 \cdot h$	$n_2 \cdot h$	$n_2 \cdot h$							
	1:	10000	25000	50000	100000	500000	1000000	[kW]	[kW]	[min^{-1}]	[min^{-1}]	[Nm]		[Nm]
L4	348	49210	46590	45450	39750	24530	19920	30	18.7	2000	4000	160	4D	58300
	410	49210	46590	45450	40310	24870	20200	28	18.6	2000	4000	160	4D	58300
	512	49210	46590	45450	40310	24870	20200	23	17.2	2000	4000	100	4B	58300
	568	47810	41400	36690	35010	29500	23960	19.9	17.3	2000	4000	100	4B	58300
	627	47810	41400	36690	35010	28930	23490	18.0	17.7	2000	4000	100	4B	58300
	825	47810	41400	36690	35010	29500	23960	13.7	15.7	2000	4000	100	4B	58300
	986	47810	41400	36690	35010	28930	23490	11.5	15.5	2000	4000	50	4A	58300
	1058	47810	41400	36690	35010	28930	23490	10.7	15.2	2000	4000	50	4A	58300
	1230	47810	41400	36690	35010	28930	23490	9.2	14.4	2000	4000	50	4A	58300
	1415	41250	41170	36690	35010	28570	23200	6.9	13.9	2000	4000	50	4A	58300
	1680	36470	31040	27480	27190	27190	23670	5.1	13.4	2000	4000	50	4A	58300
	1766	41250	41170	36690	35010	28570	23200	5.5	13.0	2000	4000	50	4A	58300
	2096	36470	31040	27480	27480	27480	23670	4.1	12.5	2000	4000	50	4A	58300
	1766	43000	39550	35220	32000	19700	16000	5.8	12.5	2000	4000	50	4A	58300
	2096	34000	29500	27000	27000	18600	15100	3.8	11.0	2000	4000	50	4A	58300

GTN13 L — 60940 Nm

	i	M_{n2} [Nm]						P_1	P_{TB}	n_1	n_{1max}	M_b		M_{2max}
		$n_2 \cdot h$	$n_2 \cdot h$	$n_2 \cdot h$	$n_2 \cdot h$	$n_2 \cdot h$	$n_2 \cdot h$							
	1:	10000	25000	50000	100000	500000	1000000	[kW]	[kW]	[min^{-1}]	[min^{-1}]	[Nm]		[Nm]
L1	4.14	60940	57660	55630	50400	42150	34240	250	*	1000	1300	—	—	105000
	5.40	57130	48690	43150	41430	41090	33380	250	*	1000	1300	—	—	105000
	6.50	40100	34160	30260	30200	30200	30200	250	*	1000	1300	—	—	105000
L2	14.2	48640	48640	48640	48640	35280	28650	150	*	1500	2000	3200	6L	105000
	16.9	60940	57660	55630	50400	34420	27960	150	*	1500	2000	3200	6L	105000
	18.5	57130	48690	43150	41430	41090	33380	150	*	1500	2000	3200	6L	105000
	21.8	60940	57660	55630	50400	33620	27300	150	39	1500	2000	3200	6L	105000
	25.8	50810	48640	48640	48640	33200	26970	150	42	1500	2000	2100	6G	105000
	28.4	57130	48690	43150	41430	40470	32870	150	36	1500	2000	3200	6L	105000
	33.6	57130	48690	43150	41430	39970	32460	150	39	1500	2000	2100	6G	105000
	40.5	40100	34160	30260	30200	30200	30200	133	37	1500	2000	1500	6E	105000
L3	51.1	48640	48640	48640	43750	27000	21930	60	33	1800	3800	1000	5K	105000
	61.0	60940	57660	55630	49510	30550	24820	60	32	1800	3800	1000	5K	105000
	72.0	60940	57660	55630	48740	30080	24430	60	35	1800	3800	1000	5K	105000
	78.3	60940	57660	55630	50400	33620	27300	60	32	1800	3800	1000	5K	105000
	92.4	60940	57660	55630	50400	33620	27300	60	34	1800	3800	800	5G	105000
	110	50810	48640	48640	48640	33200	26970	60	31	1800	3800	800	5G	105000
	120	57130	48690	43150	41430	40470	32870	60	31	1800	3800	500	5C	105000
	135	60940	57660	55630	50400	33620	27300	60	31	1800	3800	500	5C	105000
	143	57130	48690	43150	41430	39970	32460	60	28.9	1800	3800	500	5C	105000
	151	57130	48690	43150	41430	40470	32870	60	31	1800	3800	500	5C	105000
	163	54140	54140	54140	50400	33620	27300	60	29.7	1800	3800	400	5B	105000
	176	57130	48690	43150	41430	40470	32870	60	28.9	1800	3800	400	5B	105000
	182	40100	34160	30260	30200	30200	30200	46	28.9	1800	3800	400	5B	105000
	194	50810	48640	48640	48640	33200	26970	54	27.5	1800	3800	400	5B	105000
	209	57130	48690	43150	41430	39970	32460	57	26.9	1800	3800	400	5B	105000
	252	57130	48690	43150	41430	39970	32460	47	25.6	1800	3800	400	5B	105000
	304	40100	34160	30260	30200	30200	30200	27	24.4	1800	3800	400	5B	105000
L4	394	60940	57660	55630	50400	33620	27300	30	23.6	2000	4000	260	4F	105000
	452	60940	57660	55630	47760	29470	23940	30	21.7	2000	4000	160	4D	105000
	514	57130	48690	43150	41430	40470	32870	26	22.0	2000	4000	160	4D	105000
	564	54240	54240	54240	46390	28620	23250	23	20.0	2000	4000	160	4D	105000
	633	50810	48640	48640	48640	33200	26970	19.0	20.2	2000	4000	100	4B	105000
	695	57130	48690	43150	41430	39840	32360	19.4	20.2	2000	4000	100	4B	105000
	790	50810	48640	48640	48640	33200	26970	15.2	18.8	2000	4000	100	4B	105000

C

GTN13 L — 60940 Nm

	i	M_{n2} [Nm]						P_1	P_{TB}	n_1	n_{1max}	M_b		M_{2max}
		$n_2 \cdot h$	$n_2 \cdot h$	$n_2 \cdot h$	$n_2 \cdot h$	$n_2 \cdot h$	$n_2 \cdot h$							
	1:	10000	25000	50000	100000	500000	1000000	[kW]	[kW]	[min^{-1}]	[min^{-1}]	[Nm]		[Nm]
L4	889	57130	48690	43150	41430	39970	32460	15.2	18.4	2000	4000	100	4B	105000
	1014	57130	48690	43150	41430	40470	32870	13.3	18.0	2000	4000	100	4B	105000
	1117	50810	48640	48640	48640	33200	26970	10.8	17.0	2000	4000	50	4A	105000
	1266	57130	48690	43150	41430	40470	32870	10.7	16.8	2000	4000	50	4A	105000
	1394	50810	48640	48640	48640	33200	26970	8.6	16.0	2000	4000	50	4A	105000
	1502	57130	48690	43150	41430	39970	32460	9.0	15.9	2000	4000	50	4A	105000
	1817	57130	48690	43150	41430	39970	32460	7.4	15.1	2000	4000	50	4A	105000
	2187	40100	34160	30260	30200	30200	30200	4.3	14.7	2000	4000	50	4A	105000
	2187	49000	42400	39000	39000	27700	22500	5.3	11.0	2000	4000	50	4A	105000

GTN14 L — 80640 Nm

	i	M_{n2} [Nm]						P_1	P_{TB}	n_1	n_{1max}	M_b		M_{2max}
		$n_2 \cdot h$	$n_2 \cdot h$	$n_2 \cdot h$	$n_2 \cdot h$	$n_2 \cdot h$	$n_2 \cdot h$							
	1:	10000	25000	50000	100000	500000	1000000	[kW]	[kW]	[min^{-1}]	[min^{-1}]	[Nm]		[Nm]
L1	4.25	80640	75688	75688	71136	53888	43776	260	*	500	900	—	—	115000
	5.33	73304	67496	62304	59712	52048	42280	260	*	500	900	—	—	115000
	6.20	63256	54024	47944	47400	47400	41792	260	*	500	900	—	—	115000
L2	17.4	80640	75688	75688	71136	45288	36784	175	*	1500	1800	—	—	115000
	22.3	78024	72424	72424	71136	44248	35936	175	54	1500	1800	—	—	115000
	26.5	61848	59488	59488	59488	43712	35504	175	58	1500	1800	—	—	115000
	28.0	73304	67496	62304	59712	51864	42128	175	53	1500	1800	—	—	115000
	33.2	73304	67496	62304	59712	51240	41616	175	55	1500	1800	—	—	115000
	38.6	63256	54024	47944	47400	47400	41792	175	54	1500	1800	—	—	115000
L3	62.6	80640	75688	75688	63944	39456	32048	75	54	1600	3000	1500	6E	115000
	73.9	80640	75688	75688	62952	38840	31552	75	59	1600	3000	1500	6E	115000
	92.7	80640	75688	75464	61296	37824	30720	75	56	1600	3000	1500	6E	115000
	108	80640	75688	74784	60744	37480	30448	75	52	1600	3000	1500	6E	115000
	138	78024	72424	72424	71136	44248	35936	75	50	1600	3000	1500	6E	115000
	164	61848	59488	59488	59488	43712	35504	69	45	1600	3000	1050	6C	115000
	174	73304	67496	62304	59712	51864	42128	75	47	1600	3000	1050	6C	115000
	206	73304	67496	62304	59712	51240	41616	65	42	1600	3000	850	6B	115000
	240	63256	54024	47944	47400	47400	41792	48	41	1600	3000	850	6B	115000
L4	314	80640	75688	75688	61800	38128	30976	40	41	1800	3800	400	5B	115000
	394	80640	75696	74080	60176	37128	30160	40	38	1800	3800	400	5B	115000
	458	80640	75688	73416	59632	36800	29888	37	36	1800	3800	400	5B	115000
	495	80640	75688	75464	61296	37824	30720	35	36	1800	3800	400	5B	115000
	575	73304	67496	62304	59712	43136	35040	27	34	1800	3800	400	5B	115000
	588	78024	72424	72424	71136	44248	35936	28	34	1800	3800	400	5B	115000
	668	80640	75688	74784	60744	37480	30448	26	31	1800	3800	400	5B	115000
	738	78024	72424	72424	71136	44248	35936	23	32	1800	3800	400	5B	115000
	858	78024	72424	72424	71136	44248	35936	19	30	1800	3800	400	5B	115000
	926	73304	67496	62304	59712	51864	42128	16.9	31	1800	3800	400	5B	115000
	1038	78024	72424	72424	71136	44248	35936	16.0	28.3	1800	3800	400	5B	115000
	1099	73304	67496	62304	59712	51240	41616	14.2	28.4	1800	3800	400	5B	115000
	1277	73304	67496	62304	59712	51240	41616	12.2	27.0	1800	3800	400	5B	115000
	1485	63256	54024	47944	47400	47400	41792	9.1	26.3	1800	3800	400	5B	115000
	1796	63256	54024	47944	47400	47400	41792	7.5	24.8	1800	3800	400	5B	115000

C

GTN15 L — 100800 Nm

	i	M_{n2} [Nm]						P_1	P_{TB}	n_1	n_{1max}	M_b		M_{2max}
		$n_2 \cdot h$	$n_2 \cdot h$	$n_2 \cdot h$	$n_2 \cdot h$	$n_2 \cdot h$	$n_2 \cdot h$							
	1:	10000	25000	50000	100000	500000	1000000	[kW]	[kW]	[min^{-1}]	[min^{-1}]	[Nm]		[Nm]
L1	4.25	100800	94610	94610	88920	67360	54720	260	*	500	900	—	—	135000
	5.33	91630	84370	77880	74640	65060	52850	260	*	500	900	—	—	135000
	6.20	79070	67530	59930	59250	59250	52240	260	*	500	900	—	—	135000
L2	17.4	100800	94610	94610	88920	67360	54720	200	*	1500	1800	—	—	135000
	22.3	100800	94610	94610	88920	67360	54720	200	47	1500	1800	—	—	135000
	26.5	100800	94610	94610	88920	67360	54720	200	60	1500	1800	—	—	135000
	28.0	91630	84370	77880	74640	65060	52850	200	47	1500	1800	—	—	135000
	33.2	91630	84370	77880	74640	65060	52850	200	57	1500	1800	—	—	135000
	38.6	79070	67530	59930	59250	59250	52240	200	56	1500	1800	—	—	135000
L3	59.6	100800	94610	94610	88920	67360	54720	115	55	1500	2500	2600	6K	135000
	71.1	100800	94610	94610	88920	66430	53960	115	58	1500	2500	2100	6G	135000
	91.3	100800	94610	94610	88920	64880	52700	115	60	1500	2500	1500	6E	135000
	108	100800	94610	94610	88920	64070	52040	115	56	1500	2500	1100	6C	135000
	139	100800	94610	94610	88920	67360	54720	115	53	1500	2500	850	6B	135000
	165	100800	94610	94610	88920	67360	54720	105	50	1500	2500	850	6B	135000
	174	91630	84370	77880	74640	65060	52850	90	50	1500	2500	850	6B	135000
	207	91630	84370	77880	74640	65060	52850	76	47	1500	2500	850	6B	135000
	241	79070	67530	59930	59250	59250	52240	57	46	1500	2500	850	6B	135000
L4	302	100800	94610	94610	88920	66430	53960	60	40	1800	3800	400	5B	135000
	370	100800	94610	94610	88920	67360	54720	58	39	1800	3800	400	5B	135000
	441	100800	94610	94610	88920	66430	53960	49	37	1800	3800	400	5B	135000
	487	100800	94610	94610	88920	64880	52700	44	37	1800	3800	400	5B	135000
	533	100800	94610	94610	88920	66430	53960	40	35	1800	3800	400	5B	135000
	591	100800	94610	94610	88920	67360	54720	36	34	1800	3800	400	5B	135000
	672	100800	94610	94610	88920	64070	52040	32	33	1800	3800	400	5B	135000
	741	100800	94610	94610	88920	67360	54720	29	33	1800	3800	400	5B	135000
	862	100800	94610	94610	88920	67360	54720	25	32	1800	3800	400	5B	135000
	930	91630	84370	77880	74640	65060	52850	21	32	1800	3800	400	5B	135000
	1043	100800	94610	94610	88920	67360	54720	21	30	1800	3800	400	5B	135000
	1104	91630	84370	77880	74640	65060	52850	17.7	30	1800	3800	400	5B	135000
	1284	91630	84370	77880	74640	65060	52850	15.2	28.9	1800	3800	400	5B	135000
	1492	79070	67530	59930	59250	59250	52240	11.3	28.1	1800	3800	400	5B	135000
	1805	79070	67530	59930	59250	59250	52240	9.3	26.8	1800	3800	400	5B	135000

GTN16 L — 134390 Nm

	i	M_{n2} [Nm]						P_1	P_{TB}	n_1	n_{1max}	M_b		M_{2max}
		$n_2 \cdot h$	$n_2 \cdot h$	$n_2 \cdot h$	$n_2 \cdot h$	$n_2 \cdot h$	$n_2 \cdot h$							
	1:	10000	25000	50000	100000	500000	1000000	[kW]	[kW]	[min^{-1}]	[min^{-1}]	[Nm]		[Nm]
L1	4.25	134390	126150	123700	118560	89820	72960	280	*	350	500	—	—	192000
	5.33	122190	111300	99520	99520	86750	70460	280	*	350	500	—	—	192000
L2	17.4	134390	126150	123700	118560	80680	65530	200	*	1500	1800	—	—	192000
	21.8	122190	111300	99520	99520	86750	70460	200	*	1500	1800	—	—	192000
	22.3	134390	126150	123700	118560	78790	64000	200	49	1500	1800	—	—	192000
	26.5	118110	113640	113640	113640	77820	63210	200	64	1500	1800	—	—	192000
	28.0	122190	111300	99520	99520	86750	70460	200	52	1500	1800	—	—	192000
	33.2	122190	111300	99520	99520	86750	70460	200	62	1500	1800	—	—	192000
L3	59.6	129890	126150	123700	110340	68080	55300	115	61	1500	2500	3200	6L	192000
	71.1	134390	126150	123700	107660	66430	53960	115	64	1500	2500	2600	6K	192000
	76.5	134390	126150	123700	118560	78790	64000	115	59	1500	2500	2100	6G	192000
	89.3	122190	111300	99520	99520	77870	63250	115	59	1500	2500	2100	6G	192000
	96.0	122190	111300	99520	99520	86750	70460	115	55	1500	2500	1500	6E	192000
	114	122190	111300	99520	99520	86750	70460	115	52	1500	2500	1500	6E	192000
	117	134390	126150	123700	118560	77250	62750	115	61	1500	2500	1500	6E	192000
	139	134390	126150	123700	118560	76300	61980	115	58	1500	2500	1500	6E	192000
	165	118110	113640	113640	113640	77820	63210	115	54	1500	2500	1100	6C	192000
L3	174	122190	111300	99520	99520	86750	70460	115	54	1500	2500	1100	6C	192000
	207	122190	111300	99520	99520	86750	70460	102	51	1500	2500	1100	6C	192000

C

GTN16 L — 134390 Nm

	i	M_{n2} [Nm]						P_1	P_{TB}	n_1	n_{1max}	M_b		M_{2max}
		$n_2 \cdot h$	$n_2 \cdot h$	$n_2 \cdot h$	$n_2 \cdot h$	$n_2 \cdot h$	$n_2 \cdot h$							
	1:	10000	25000	50000	100000	500000	1000000	[kW]	[kW]	[min-1]	[min-1]	[Nm]		[Nm]
L4	215	129890	126150	123700	110340	68080	55300	60	45	1800	3800	800	5G	192000
	253	129890	126150	123700	110340	68080	55300	60	46	1800	3800	800	5G	192000
	275	134390	126150	123700	118560	78790	64000	60	43	1800	3800	630	5E	192000
	318	129890	126150	123700	110340	68080	55300	60	44	1800	3800	630	5E	192000
	346	122190	111300	99520	99520	86750	70460	60	40	1800	3800	500	5C	192000
	399	122190	111300	99520	99520	79810	64830	60	42	1800	3800	400	5B	192000
	447	129890	126150	123700	107360	66240	53810	60	39	1800	3800	400	5B	192000
	500	134390	126150	123700	118560	76300	61980	57	36	1800	3800	400	5B	192000
	563	118110	113640	113640	113640	77820	63210	45	38	1800	3800	400	5B	192000
	628	122190	111300	99520	99520	86750	70460	41	34	1800	3800	400	5B	192000
	706	122190	111300	99520	99520	86750	70460	37	36	1800	3800	400	5B	192000
	784	122190	111300	99520	99520	86750	70460	33	36	1800	3800	400	5B	192000
	880	118110	113640	113640	113640	77820	63210	29	34	1800	3800	400	5B	192000
	1020	122190	111300	99520	99520	75110	61010	26	32	1800	3800	400	5B	192000
	1104	122190	111300	99520	99520	86750	70460	24	32	1800	3800	400	5B	192000
	1237	118110	113640	113640	113640	77820	63210	20	31	1800	3800	400	5B	192000
	1308	122190	111300	99520	99520	86750	70460	19.9	31	1800	3800	400	5B	192000
	1553	122190	111300	99520	99520	86750	70460	16.8	29.7	1800	3800	400	5B	192000

GTN17 L — 207490 Nm

	i	M_{n2} [Nm]						P_1	P_{TB}	n_1	n_{1max}	M_b		M_{2max}
		$n_2 \cdot h$	$n_2 \cdot h$	$n_2 \cdot h$	$n_2 \cdot h$	$n_2 \cdot h$	$n_2 \cdot h$							
	1:	10000	25000	50000	100000	500000	1000000	[kW]	[kW]	[min-1]	[min-1]	[Nm]		[Nm]
L1	4.09	207490	196240	189230	171410	121500	98690	300	*	200	300	—	—	393000
	5.25	195640	167510	148950	142330	118660	96380	300	*	200	300	—	—	393000
	6.23	150260	128480	114130	112960	112960	95190	300	*	200	300	—	—	393000
L2	16.9	207490	196240	189230	171410	109610	89030	250	46	1000	1300	—	—	393000
	22.1	179820	166930	166930	166930	106860	86800	250	66	1000	1300	—	—	393000
	26.6	125790	121300	121300	121300	103860	84360	250	69	1000	1300	—	—	393000
	28.4	195640	167510	148950	142330	118660	96380	250	64	1000	1300	—	—	393000
	34.1	155950	155950	148950	142330	118660	96380	250	67	1000	1300	—	—	393000
	40.5	150260	128480	114130	112960	112960	95190	250	61	1000	1300	—	—	393000
L3	58.1	187760	187760	183040	148670	91740	74510	150	34	1500	2000	2600	6K	393000
	69.3	207490	196240	178590	145060	89510	72700	150	47	1500	2000	2600	6K	393000
	89.0	207490	196240	174410	141670	87410	71000	150	58	1500	2000	2600	6K	393000
	106	193690	193690	172260	139920	86340	70130	150	58	1500	2000	2100	6G	393000
	116	179820	166930	166930	166930	105230	85470	150	54	1500	2000	2100	6G	393000
	138	179820	166930	166930	166930	103930	84420	150	54	1500	2000	1500	6E	393000
	166	125790	121300	121300	121300	103860	84360	131	51	1500	2000	1100	6C	393000
	179	155950	155950	148950	142330	118660	96380	150	49	1500	2000	1100	6C	393000
	213	155950	155950	148950	142330	118660	96380	126	49	1500	2000	850	6B	393000
	252	150260	128480	114130	112960	112960	95190	102	45	1500	2000	850	6B	393000
L4	378	207500	196240	174410	141670	87410	71000	60	45	1800	3800	800	5G	393000
	449	193690	193690	172260	139920	86340	70130	60	42	1800	3800	500	5C	393000
	493	179820	166930	166930	166930	105230	85470	60	42	1800	3800	400	5B	393000
	552	207490	196240	174410	141670	87410	71000	60	41	1800	3800	400	5B	393000
	619	179820	166930	166930	166930	105230	85470	60	40	1800	3800	400	5B	393000
	719	179820	166930	166930	166930	105230	85470	53	38	1800	3800	400	5B	393000
	792	193690	193690	172260	139920	86340	70130	52	37	1800	3800	400	5B	393000
	904	155950	155950	148950	142330	118660	96380	37	36	1800	3800	400	5B	393000
	1032	179820	166930	166930	166930	103930	84420	37	34	1800	3800	400	5B	393000
	1134	155950	155950	148950	142330	118660	96380	29	35	1800	3800	400	5B	393000
	1318	155950	155950	148950	142330	118660	96380	25	33	1800	3800	400	5B	393000
	1595	155950	155950	148950	142330	118660	96380	21	32	1800	3800	400	5B	393000
	1893	150260	128480	114130	112960	112960	95190	16.9	30	1800	3800	400	5B	393000

C

GTN18 L — 297550 Nm

	i	M_{n2} [Nm]						P_1	P_{TB}	n_1	n_{1max}	M_b		M_{2max}
		$n_2 \cdot h$	$n_2 \cdot h$	$n_2 \cdot h$	$n_2 \cdot h$	$n_2 \cdot h$	$n_2 \cdot h$							
	1:	10000	25000	50000	100000	500000	1000000	[kW]	[kW]	[min^{-1}]	[min^{-1}]	[Nm]		[Nm]
L1	4.40	297550	260520	231720	223900	160590	130440	340	*	200	300	—	—	500000
L2	18.7	297550	260520	231720	223900	160590	130440	260	131	500	900	—	—	500000
	23.5	297550	260520	231720	223900	160590	130440	260	127	500	900	—	—	500000
	27.3	264700	256140	231720	223900	160590	130440	260	123	500	900	—	—	500000
L3	76.5	297550	260520	231720	223900	160590	130440	200	58	1500	1800	3200	6L	500000
	98.2	297550	260520	231720	223900	160590	130440	200	77	1500	1800	3200	6L	500000
	117	297550	260520	231720	223900	160590	130440	200	80	1500	1800	3200	6L	500000
	123	297550	260520	231720	223900	160590	130440	200	74	1500	1800	3200	6L	500000
	146	297550	260520	231720	223900	160590	130440	200	75	1500	1800	2600	6K	500000
	170	264700	256140	231720	223900	160590	130440	200	73	1500	1800	2100	6G	500000
L4	262	297550	260520	231720	223900	160590	130440	115	69	1500	2500	1500	6E	500000
	313	297550	260520	231720	223900	160590	130440	115	70	1500	2500	1100	6C	500000
	337	297550	260520	231720	223900	160590	130440	115	66	1500	2500	1100	6C	500000
	402	297550	260520	231720	223900	160590	130440	115	69	1500	2500	850	6B	500000
	422	297550	260520	231720	223900	160590	130440	115	62	1500	2500	850	6B	500000
	477	297550	260520	231720	223900	160590	130440	111	66	1500	2500	850	6B	500000
	515	297550	260520	231720	223900	160590	130440	102	65	1500	2500	850	6B	500000
	612	297550	260520	231720	223900	160590	130440	86	62	1500	2500	850	6B	500000
	647	297550	260520	231720	223900	160590	130440	82	62	1500	2500	850	6B	500000
	726	297550	260520	231720	223900	160590	130440	73	59	1500	2500	850	6B	500000
	768	297550	260520	231720	223900	160590	130440	69	59	1500	2500	850	6B	500000
	911	297550	260520	231720	223900	160590	130440	58	56	1500	2500	850	6B	500000
	1059	264700	256140	231720	223900	160590	130440	44	54	1500	2500	850	6B	500000

GTN19 L — 471190 Nm

	i	M_{n2} [Nm]						P_1	P_{TB}	n_1	n_{1max}	M_b		M_{2max}
		$n_2 \cdot h$	$n_2 \cdot h$	$n_2 \cdot h$	$n_2 \cdot h$	$n_2 \cdot h$	$n_2 \cdot h$							
	1:	10000	25000	50000	100000	500000	1000000	[kW]	[kW]	[min^{-1}]	[min^{-1}]	[Nm]		[Nm]
L1	4.88	471190	383900	311830	253280	156280	126940	380	*	200	300	—	—	680000
	5.77	356270	305830	272430	249240	153790	124910	380	*	200	300	—	—	680000
L2	20.7	471190	383900	311830	253280	156280	126940	260	165	500	900	—	—	680000
	24.5	356270	305830	272430	249240	153790	124910	260	157	500	900	—	—	680000
	26.0	471190	383900	311830	253280	156280	126940	260	162	500	900	—	—	680000
	30.8	356270	305830	272430	249240	153790	124910	260	155	500	900	—	—	680000
	35.8	336430	305830	272430	249240	153790	124910	260	155	500	900	—	—	680000
L3	84.8	471190	383900	311830	253280	156280	126940	200	85	1500	1800	—	—	680000
	100	356270	305830	272430	249240	153790	124910	200	84	1500	1800	—	—	680000
	109	471190	383900	311830	253280	156280	126940	200	106	1500	1800	—	—	680000
	126	356270	305830	272430	249240	153790	124910	200	85	1500	1800	—	—	680000
	129	443030	383900	311830	253280	156280	126940	200	108	1500	1800	—	—	680000
	137	471190	383900	311830	253280	156280	126940	200	102	1500	1800	—	—	680000
	162	356270	305830	272430	249240	153790	124910	200	98	1500	1800	—	—	680000
	188	288420	284000	283990	253280	156280	126940	200	97	1500	1800	—	—	680000
	192	356270	305830	272430	249240	153790	124910	200	98	1500	1800	—	—	680000
	223	336430	305830	272430	249240	153790	124910	200	94	1500	1800	—	—	680000
L4	291	471190	383900	311830	253280	156280	126940	115	92	1500	2500	2100	6G	680000
	347	471190	383900	311830	253280	156280	126940	115	91	1500	2500	2100	6G	680000
	410	356270	305830	272430	249240	153790	124910	115	89	1500	2500	1100	6C	680000
	445	471190	383900	311830	253280	156280	126940	115	89	1500	2500	2100	6G	680000
	515	356270	305830	272430	249240	153790	124910	115	84	1500	2500	850	6B	680000
	528	406490	383900	311830	253280	156280	126940	115	83	1500	2500	850	6B	680000
	558	471190	383900	311830	253280	156280	126940	115	84	1500	2500	850	6B	680000
	571	443030	383900	311830	253280	156280	126940	115	82	1500	2500	850	6B	680000
	625	356270	305830	272430	249240	153790	124910	101	82	1500	2500	850	6B	680000
	678	433020	383900	311830	253280	156280	126940	113	78	1500	2500	850	6B	680000

C

GTN19 L — 471190 Nm

	i	M_{n2} [Nm]						P_1	P_{TB}	n_1	n_{1max}	M_b		M_{2max}
		$n_2 \cdot h$	$n_2 \cdot h$	$n_2 \cdot h$	$n_2 \cdot h$	$n_2 \cdot h$	$n_2 \cdot h$							
	1:	10000	25000	50000	100000	500000	1000000	[kW]	[kW]	[min-1]	[min-1]	[Nm]		[Nm]
L4	717	471190	383900	311830	253280	156280	126940	115	79	1500	2500	850	6B	680000
	802	356270	305830	272430	249240	153790	124910	79	78	1500	2500	850	6B	680000
	850	438750	383900	311830	253280	156280	126940	92	75	1500	2500	850	6B	680000
	912	336430	305830	272430	249240	153790	124910	65	71	1500	2500	850	6B	680000
	1007	356270	305830	272430	249240	153790	124910	63	72	1500	2500	850	6B	680000
	1195	356270	305830	272430	249240	153790	124910	53	68	1500	2500	850	6B	680000
	1389	336430	305830	272430	249240	153790	124910	43	66	1500	2500	850	6B	680000

GTN21 L — 655740 Nm

	i	M_{n2} [Nm]						P_1	P_{TB}	n_1	n_{1max}	M_b		M_{2max}
		$n_2 \cdot h$	$n_2 \cdot h$	$n_2 \cdot h$	$n_2 \cdot h$	$n_2 \cdot h$	$n_2 \cdot h$							
	1:	10000	25000	50000	100000	500000	1000000	[kW]	[kW]	[min-1]	[min-1]	[Nm]		[Nm]
L1	4.44	655740	517290	420170	341290	210580	171050	540	*	200	300	—	—	934000
L2	18.2	655740	517290	420170	341290	210580	171050	300	*	200	300	—	—	934000
	23.3	655740	517290	420170	341290	210580	172000	300	*	200	300	—	—	934000
	27.7	536350	517290	420170	341290	210580	171050	300	*	200	300	—	—	934000
L3	75.3	655740	517290	420170	341290	210580	171050	250	132	1000	1200	—	—	934000
	98.2	655740	517290	420170	341290	210580	171050	250	135	1000	1200	—	—	934000
	118	655740	517290	420170	341290	210580	171050	250	132	1000	1200	—	—	934000
	126	655740	517290	420170	341290	210580	172000	250	127	1000	1200	—	—	934000
	152	655740	517290	420170	341290	210580	172000	250	125	1000	1200	—	—	934000
	180	536350	517290	420170	341290	210580	171050	250	115	1000	1200	—	—	934000
L4	258	655740	517290	420170	341290	210580	171050	150	101	1500	2000	2100	6G	934000
	308	655740	517290	420170	341290	210580	171050	150	105	1500	2000	2100	6G	934000
	395	655740	517290	420170	341290	210580	171050	150	107	1500	2000	2100	6G	934000
	469	655740	517290	420170	341290	210580	171050	150	103	1500	2000	1500	6E	934000
	515	655740	517290	420170	341290	210580	171050	150	98	1500	2000	1500	6E	934000
	612	655740	517290	420170	341290	210580	171050	150	95	1500	2000	1100	6C	934000
	736	655740	517290	420170	341290	210580	171050	130	90	1500	2000	850	6B	934000
	796	655740	517290	420170	341290	210580	172000	120	88	1500	2000	850	6B	934000
	945	655740	517290	420170	341290	210580	172000	101	86	1500	2000	850	6B	934000
	1122	536350	517290	420170	341290	210580	171050	79	81	1500	2000	850	6B	934000

GTN23 L — 890310 Nm

	i	M_{n2} [Nm]						P_1	P_{TB}	n_1	n_{1max}	M_b		M_{2max}
		$n_2 \cdot h$	$n_2 \cdot h$	$n_2 \cdot h$	$n_2 \cdot h$	$n_2 \cdot h$	$n_2 \cdot h$							
	1:	10000	25000	50000	100000	500000	1000000	[kW]	[kW]	[min-1]	[min-1]	[Nm]		[Nm]
L1	4.60	890310	829940	742050	602740	371910	302080	850	*	150	250	—	—	1580000
L2	19.6	890310	829940	742050	602740	371910	302080	380	*	200	300	—	—	1580000
	22.4	890310	829940	742050	602740	371910	302080	380	*	200	300	—	—	1580000
	26.5	890310	829940	742050	602740	371910	302080	380	*	200	300	—	—	1580000
	33.1	890310	829940	742050	602740	371910	302080	380	*	200	300	—	—	1580000
L3	83.3	890310	829940	742050	602740	371910	302080	260	179	500	800	—	—	1580000
	105	890310	829940	742050	602740	371910	302080	260	167	500	800	—	—	1580000
	113	890310	829940	742050	602740	371910	302080	260	157	500	800	—	—	1580000
	120	890310	829940	742050	602740	371910	302080	260	155	500	800	—	—	1580000
	142	890310	829940	742050	602740	371910	302080	260	149	500	800	—	—	1580000
	165	890310	829940	742050	602740	371910	302080	260	144	500	800	—	—	1580000
	205	890310	829940	742050	602740	371910	302080	210	135	500	800	—	—	1580000
L4	341	890310	829940	742050	602740	371910	302080	200	97	1500	1800	3200	6L	1580000
	390	890310	829940	742050	602740	371910	302080	200	93	1500	1800	3200	6L	1580000

C

GTN23 L — 890310 Nm

	i	M_{n2} [Nm]						P_1	P_{TB}	n_1	n_{1max}	M_b		M_{2max}
		$n_2 \cdot h$	$n_2 \cdot h$	$n_2 \cdot h$	$n_2 \cdot h$	$n_2 \cdot h$	$n_2 \cdot h$							
	1:	10000	25000	50000	100000	500000	1000000	[kW]	[kW]	[min^{-1}]	[min^{-1}]	[Nm]		[Nm]
L4	438	890310	829940	742050	602740	371910	302080	200	109	1500	1800	3200	6L	1580000
	500	890310	829940	742050	602740	371910	302080	200	102	1500	1800	3200	6L	1580000
	569	890310	829940	742050	602740	371910	302080	200	87	1500	1800	2600	6K	1580000
	628	890310	829940	742050	602740	371910	302080	200	96	1500	1800	2600	6K	1580000
	703	890310	829940	742050	602740	371910	302080	197	99	1500	1800	2600	6K	1580000
	758	890310	829940	742050	602740	371910	302080	182	97	1500	1800	2600	6K	1580000
	882	890310	829940	742050	602740	371910	302080	157	92	1500	1800	2600	6K	1580000
	1025	890310	829940	742050	602740	371910	302080	135	89	1500	1800	2600	6K	1580000
	1101	890310	829940	742050	602740	371910	302080	126	88	1500	1800	2600	6K	1580000
	1280	890310	829940	742050	602740	371910	302080	108	85	1500	1800	2600	6K	1580000

GTN25 L — 1286700 Nm

	i	M_{n2} [Nm]						P_1	P_{TB}	n_1	n_{1max}	M_b		M_{2max}
		$n_2 \cdot h$	$n_2 \cdot h$	$n_2 \cdot h$	$n_2 \cdot h$	$n_2 \cdot h$	$n_2 \cdot h$							
	1:	10000	25000	50000	100000	500000	1000000	[kW]	[kW]	[min^{-1}]	[min^{-1}]	[Nm]		[Nm]
L1	4.60	1286700	1166950	947860	769900	475050	385860	1050	*	120	250	—	—	2000000
L2	19.6	1286600	1104050	896760	729000	449450	365060	380	*	200	300	—	—	2000000
	22.4	1286700	1083740	880270	715000	441180	358350	380	*	200	300	—	—	2000000
	26.5	1286700	1066430	866210	703580	434130	352630	380	*	200	300	—	—	2000000
	33.1	963170	963170	845000	686160	423380	343890	380	*	200	300	—	—	2000000
L3	83.3	1286600	1104050	896760	728400	449450	365060	260	206	500	800	—	—	2000000
	105	1286600	1104050	896760	728400	449450	365060	260	192	500	800	—	—	2000000
	113	1286700	1066430	866210	703580	434130	352630	260	181	500	800	—	—	2000000
	120	1286700	1083740	880270	715000	441180	358350	260	177	500	800	—	—	2000000
	142	1286700	1066430	866210	703580	434130	352630	260	170	500	800	—	—	2000000
	165	1286700	1066430	866210	703580	434130	352630	260	164	500	800	—	—	2000000
	205	963170	963170	845000	686160	423380	343890	226	154	500	800	—	—	2000000
L4	341	1286600	1104050	896760	728400	449450	365060	200	120	1500	1800	3200	6L	2000000
	390	1286700	1083740	880270	715000	441180	358350	200	113	1500	1800	3200	6L	2000000
	438	1286600	1104050	896760	728400	449450	365060	200	128	1500	1800	3200	6L	2000000
	500	1286700	1083740	880270	715000	441180	358350	200	120	1500	1800	3200	6L	2000000
	569	1286700	1083740	880270	715000	441180	358350	200	105	1500	1800	3200	6L	2000000
	628	1286700	1083740	880270	715000	441180	358350	200	113	1500	1800	3200	6L	2000000
	703	1286700	1066430	866210	703580	434130	352630	200	115	1500	1800	3200	6L	2000000
	758	1286600	1104050	896760	728400	449450	365060	200	113	1500	1800	2600	6K	2000000
	882	1286700	1066430	866210	703580	434130	352630	200	108	1500	1800	2600	6K	2000000
	1025	1286700	1066430	866210	703580	434130	352630	193	104	1500	1800	2600	6K	2000000
	1101	963170	963170	845120	686350	423550	343890	135	102	1500	1800	2600	6K	2000000
	1280	963170	963170	845120	686350	423550	343890	116	99	1500	1800	2600	6K	2000000

C

C

C GEARMOTOR SELECTION BY NUMBER OF WORKING CYCLES

C 根工作循环数选择齿轮箱

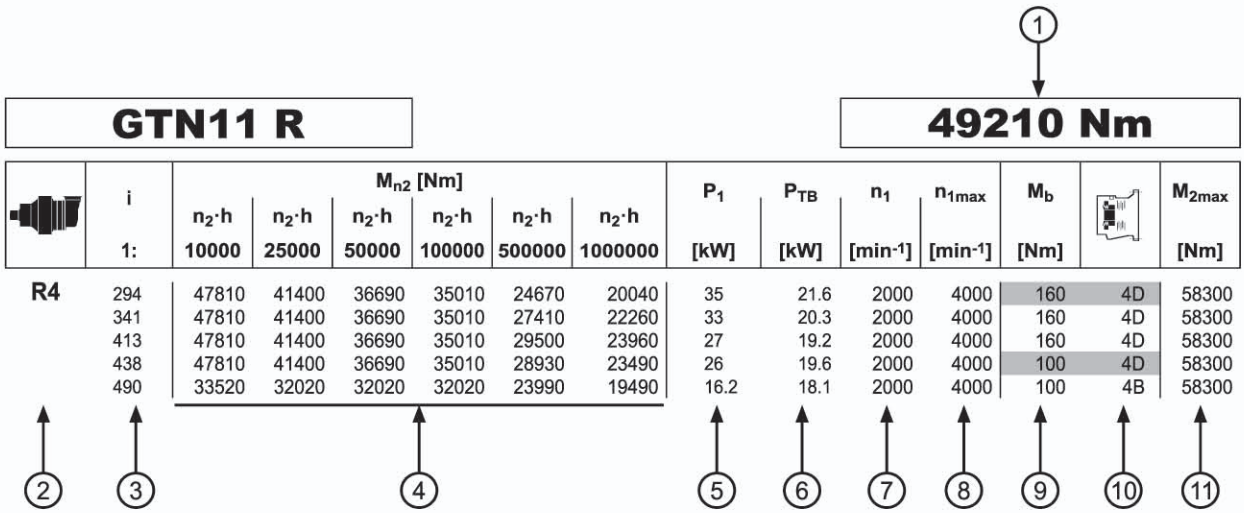

	i	M_{n2} [Nm]						P_1	P_{TB}	n_1	n_{1max}	M_b		M_{2max}
		$n_2 \cdot h$	$n_2 \cdot h$	$n_2 \cdot h$	$n_2 \cdot h$	$n_2 \cdot h$	$n_2 \cdot h$							
	1:	10000	25000	50000	100000	500000	1000000	[kW]	[kW]	[min^{-1}]	[min^{-1}]	[Nm]		[Nm]
R4	294	47810	41400	36690	35010	24670	20040	35	21.6	2000	4000	160	4D	58300
	341	47810	41400	36690	35010	27410	22260	33	20.3	2000	4000	160	4D	58300
	413	47810	41400	36690	35010	29500	23960	27	19.2	2000	4000	160	4D	58300
	438	47810	41400	36690	35010	28930	23490	26	19.6	2000	4000	100	4D	58300
	490	33520	32020	32020	32020	23990	19490	16.2	18.1	2000	4000	100	4B	58300
					4			5	6	7	8	9	10	11
	2	3												

1	参考扭矩	Reference torque
2	减速机级数（直角齿轮）	Number of reduction stages (right-angled gear unit)
3	传动比	Gear ratio
4	齿轮箱额定输出扭矩 服务系数Fs=1 $n_2 \cdot h$表示	Gearbox rated output torque based on: - service factor f_S=1 - $n_2 \cdot h$ indicated
5	最大功率传输到输入轴	Maximum power transmitted to the input shaft
6	齿轮箱热功率	Gearbox thermal capacity
7	连续工作的输入转速	Input angular speed for continuous duty
8	最大输入角速度间歇工作20%基于60分钟运行	Maximum input angular speed for intermittent duty 20% based 60 min running
9	额定制动扭矩	Rated brake torque (Hydraulic brake)
10	制动器型号	Negative multidisc hydraulic brake
11	齿轮箱最大扭矩	Maximum output torque at gearbox

C

GTN00 R — 1250 Nm

	i	M_{n2} [Nm]						P_1	P_{TB}	n_1	n_{1max}	M_b		M_{2max}
		$n_2 \cdot h$	$n_2 \cdot h$	$n_2 \cdot h$	$n_2 \cdot h$	$n_2 \cdot h$	$n_2 \cdot h$							
	1:	10000	25000	50000	100000	500000	1000000	[kW]	[kW]	[min^{-1}]	[min^{-1}]	[Nm]		[Nm]
R2	7.13	760	730	730	730	730	730	15.0	12.3	2000	4000	160	4D	2000
	8.74	1250	1070	950	860	840	720	15.0	12.3	2000	4000	160	4D	2400
	11.8	860	730	650	650	650	630	12.2	10.1	2000	4000	100	4B	2400
	14.8	700	600	550	550	550	510	8.3	8.8	2000	4000	100	4B	2400
	18.5	460	390	370	370	370	370	4.5	8.4	2000	4000	100	4B	2400
R3	24.8	760	730	730	730	730	730	6.2	7.8	2000	4000	50	4A	2000
	30.4	1250	1070	950	860	840	720	6.6	7.8	2000	4000	50	4A	2400
	37.3	1250	1070	950	860	840	720	5.5	7.9	2000	4000	50	4A	2400
	41.2	860	730	650	650	650	630	3.6	6.9	2000	4000	50	4A	2400
	50.4	1250	1070	950	860	840	720	4.3	7.1	2000	4000	50	4A	2400
	62.9	1250	1070	950	860	840	720	3.5	6.5	2000	4000	50	4A	2400
	68.2	860	730	650	650	650	630	2.4	6.3	2000	4000	50	4A	2400
	78.7	1250	1070	950	860	840	720	2.9	6.2	2000	4000	50	4A	2400
	85.2	860	730	650	650	650	630	2.0	5.8	2000	4000	50	4A	2400
	106	860	730	650	650	650	630	1.7	5.6	2000	4000	50	4A	2400
	133	700	600	550	550	550	510	1.2	5.2	2000	4000	50	4A	2400
R4	106	1250	1070	950	860	840	720	2.2	5.7	2000	4000	50	4A	2400
	130	1250	1070	950	860	840	720	1.8	5.7	2000	4000	50	4A	2400
	143	860	730	650	650	650	630	1.4	5.1	2000	4000	50	4A	2400
	159	1250	1070	950	860	840	720	1.5	5.7	2000	4000	50	4A	2400
	175	1250	1070	950	860	840	720	1.3	5.3	2000	4000	50	4A	2400
	215	1250	1070	950	860	840	720	1.1	5.3	2000	4000	50	4A	2400
	237	860	730	650	650	650	630	0.86	4.9	2000	4000	50	4A	2400
	268	1250	1070	950	860	840	720	0.88	5.0	2000	4000	50	4A	2400
	291	1250	1070	950	860	840	720	0.81	4.8	2000	4000	50	4A	2400
	363	1250	1070	950	860	840	720	0.65	4.6	2000	4000	50	4A	2400
	394	860	730	650	650	650	630	0.52	4.5	2000	4000	50	4A	2400
	453	1250	1070	950	860	840	720	0.52	4.3	2000	4000	50	4A	2400
	491	860	730	650	650	650	630	0.41	4.3	2000	4000	50	4A	2400
	613	860	730	650	650	650	630	0.33	4.1	2000	4000	50	4A	2400
	766	860	730	650	650	650	630	0.27	4.0	2000	4000	50	4A	2400

GTN01 R — 2060 Nm

	i	M_{n2} [Nm]						P_1	P_{TB}	n_1	n_{1max}	M_b		M_{2max}
		$n_2 \cdot h$	$n_2 \cdot h$	$n_2 \cdot h$	$n_2 \cdot h$	$n_2 \cdot h$	$n_2 \cdot h$							
	1:	10000	25000	50000	100000	500000	1000000	[kW]	[kW]	[min^{-1}]	[min^{-1}]	[Nm]		[Nm]
R2	7.13	1490	1430	1430	1430	1430	1300	15.0	13.9	2000	4000	260	4F	3200
	8.74	2060	2060	1890	1730	1580	1280	15.0	14.4	2000	4000	330	4H	3200
	11.8	1720	1460	1300	1300	1300	1240	15.0	12.2	2000	4000	260	4F	3200
	14.8	1150	1150	1150	1150	1150	940	15.0	10.7	2000	4000	160	4D	3200
	18.5	920	780	740	740	740	740	8.0	10.1	2000	4000	160	4D	3200
R3	24.8	1490	1430	1430	1430	1430	1300	12.4	8.9	2000	4000	100	4B	3400
	30.4	2460	2140	1900	1730	1580	1280	13.1	9.0	2000	4000	100	4B	3400
	37.3	2460	2140	1900	1730	1580	1280	10.8	9.0	2000	4000	100	4B	3400
	41.2	1720	1460	1300	1300	1300	1240	7.3	7.9	2000	4000	100	4B	3400
	50.4	2460	2140	1900	1730	1580	1280	8.4	8.0	2000	4000	100	4B	3400
	62.9	2000	2000	1830	1730	1580	1280	7.0	7.3	2000	4000	50	4A	3400
	68.2	1720	1460	1300	1300	1300	1240	4.8	7.1	2000	4000	50	4A	3400
	78.7	1600	1600	1600	1600	1530	1280	5.8	7.0	2000	4000	50	4A	3400
	85.2	1720	1460	1300	1300	1300	1240	4.0	6.6	2000	4000	50	4A	3400
	106	1720	1460	1300	1300	1300	1240	3.3	6.3	2000	4000	50	4A	3400
	133	1150	1150	1150	1150	1150	940	2.0	5.8	2000	4000	50	4A	3400
R4	106	2460	2140	1900	1730	1580	1280	4.5	6.3	2000	4000	50	4A	3400
	130	2460	2140	1900	1730	1580	1280	3.6	6.3	2000	4000	50	4A	3400
	143	1720	1460	1300	1300	1300	1240	2.7	5.8	2000	4000	50	4A	3400
	159	2460	2140	1900	1730	1580	1280	3.0	6.3	2000	4000	50	4A	3400

C

GTN01 R — 2060 Nm

	i	M_{n2} [Nm]						P_1	P_{TB}	n_1	n_{1max}	M_b		M_{2max}
		$n_2 \cdot h$	$n_2 \cdot h$	$n_2 \cdot h$	$n_2 \cdot h$	$n_2 \cdot h$	$n_2 \cdot h$							
	1:	10000	25000	50000	100000	500000	1000000	[kW]	[kW]	[min-1]	[min-1]	[Nm]		[Nm]
R4	175	2460	2140	1900	1730	1580	1280	2.7	5.9	2000	4000	50	4A	3400
	215	2460	2140	1900	1730	1580	1280	2.2	5.8	2000	4000	50	4A	3400
	237	1720	1460	1300	1300	1300	1240	1.7	5.3	2000	4000	50	4A	3400
	268	2460	2140	1900	1730	1580	1280	1.8	5.5	2000	4000	50	4A	3400
	291	2460	2140	1900	1730	1580	1280	1.6	5.3	2000	4000	50	4A	3400
	363	2460	2140	1900	1730	1580	1280	1.3	5.0	2000	4000	50	4A	3400
	394	1720	1460	1300	1300	1300	1240	1.0	4.9	2000	4000	50	4A	3400
	453	2000	2000	1830	1730	1580	1280	1.0	4.7	2000	4000	50	4A	3400
	491	1720	1460	1300	1300	1300	1240	0.82	4.7	2000	4000	50	4A	3400
	613	1720	1460	1300	1300	1300	1240	0.66	4.4	2000	4000	50	4A	3400
	766	1720	1460	1300	1300	1300	1240	0.52	4.3	2000	4000	50	4A	3400

GTN03 R — 2970 Nm

	i	M_{n2} [Nm]						P_1	P_{TB}	n_1	n_{1max}	M_b		M_{2max}
		$n_2 \cdot h$	$n_2 \cdot h$	$n_2 \cdot h$	$n_2 \cdot h$	$n_2 \cdot h$	$n_2 \cdot h$							
	1:	10000	25000	50000	100000	500000	1000000	[kW]	[kW]	[min-1]	[min-1]	[Nm]		[Nm]
R2	9.23	2410	2310	2310	2310	2310	1940	35	18.1	1800	3800	330	4H	5200
	10.9	2970	2810	2810	2650	2570	2090	35	18.3	1800	3800	330	4H	5200
	13.7	2850	2520	2230	2200	2140	2030	32	16.3	1800	3800	260	4F	5200
	15.9	2440	2080	1840	1820	1820	1820	23	14.4	1800	3800	260	4F	5200
	19.2	2000	1750	1650	1650	1650	1500	17.2	13.1	1800	3800	160	4D	5200
	24.8	1050	900	860	860	860	860	7.0	11.2	1800	3800	160	4D	5200
R3	25.7	2410	2310	2310	2310	2130	1730	15.0	10.6	2.000	4.000	160	4D	5200
	31.5	2410	2310	2310	2310	2100	1700	15.0	10.6	2.000	4.000	100	4B	5200
	37.1	2970	2810	2810	2650	2350	1910	15.0	10.7	2.000	4.000	100	4B	5200
	42.6	2410	2210	2210	2210	2030	1650	11.6	9.3	2.000	4.000	100	4B	5200
	46.6	2850	2520	2230	2200	2140	2030	11.2	10.0	2.000	4.000	100	4B	5200
	50.3	2770	2700	2650	2620	2280	1850	12.2	9.3	2.000	4.000	100	4B	5200
	54.2	2440	2080	1840	1820	1820	1820	8.1	9.2	2.000	4.000	100	4B	5200
	63.1	2850	2520	2230	2200	2140	2030	8.7	8.8	2.000	4.000	100	4B	5200
	73.3	2440	2080	1840	1820	1820	1820	6.2	8.2	2.000	4.000	50	4A	5200
	78.7	2850	2450	2230	2200	2140	2030	7.1	8.0	2.000	4.000	50	4A	5200
	91.5	2440	2080	1840	1820	1820	1820	5.2	7.5	2.000	4.000	50	4A	5200
	114	2300	2080	1840	1820	1820	1820	4.3	7.2	2.000	4.000	50	4A	5200
R4	129	2970	2810	2810	2650	2390	1940	5.1	7.2	2.000	4.000	50	4A	5200
	148	2410	2310	2310	2310	2130	1730	3.6	6.5	2.000	4.000	50	4A	5200
	158	2970	2810	2810	2650	2350	1910	4.3	7.1	2.000	4.000	50	4A	5200
	185	2410	2310	2310	2310	2130	1730	2.9	6.1	2.000	4.000	50	4A	5200
	214	2970	2810	2810	2650	2350	1910	3.2	6.5	2.000	4.000	50	4A	5200
	231	2440	2080	1840	1820	1820	1820	2.4	6.3	2.000	4.000	50	4A	5200
	255	2440	2080	1840	1820	1820	1820	2.1	5.9	2.000	4.000	50	4A	5200
	290	2770	2700	2650	2620	2280	1850	2.2	5.9	2.000	4.000	50	4A	5200
	313	2440	2080	1840	1820	1820	1820	1.7	5.9	2.000	4.000	50	4A	5200
	336	2850	2520	2230	2200	2140	2030	2.0	5.8	2.000	4.000	50	4A	5200
	364	2850	2520	2230	2200	2140	2030	1.9	5.7	2.000	4.000	50	4A	5200
	390	2440	2080	1840	1820	1820	1820	1.4	5.5	2.000	4.000	50	4A	5200
	452	2250	2250	2250	2250	1830	1800	1.2	5.2	2.000	4.000	50	4A	5200
	528	2440	2080	1840	1820	1820	1820	1.0	5.1	2.000	4.000	50	4A	5200
	567	2850	2450	2230	2200	2140	2030	1.2	5.0	2.000	4.000	50	4A	5200
	659	2440	2080	1840	1820	1820	1820	0.83	4.7	2.000	4.000	50	4A	5200
	797	2000	1750	1650	1650	1650	1500	0.59	4.6	2.000	4.000	50	4A	5200
	824	2440	2080	1840	1820	1820	1820	0.66	4.6	2.000	4.000	50	4A	5200

C

GTN04 R — 3960 Nm

	i	M_{n2} [Nm]						P_1	P_{TB}	n_1	n_{1max}	M_b		M_{2max}
		$n_2 \cdot h$	$n_2 \cdot h$	$n_2 \cdot h$	$n_2 \cdot h$	$n_2 \cdot h$	$n_2 \cdot h$							
	1:	10000	25000	50000	100000	500000	1000000	[kW]	[kW]	[min-1]	[min-1]	[Nm]		[Nm]
R2	9.23	3710	3520	3500	3220	2390	1940	35	18.0	1800	3800	330	4H	6600
	10.9	3960	3750	3690	3540	2680	2180	35	18.6	1800	3800	330	4H	6600
	13.7	3740	3190	2850	2850	2850	2560	35	16.7	1800	3800	260	4F	6600
	16.8	3000	2560	2390	2390	2390	2390	28	13.8	1800	3800	260	4F	6600
R3	25.7	3710	3520	3500	3440	3080	2830	15.0	10.8	2.000	4.000	160	4D	7300
	31.5	3710	3520	3500	3440	3080	2830	15.0	10.9	2.000	4.000	100	4B	7300
	37.1	3960	3750	3690	3540	3430	2780	15.0	11.0	2.000	4.000	100	4B	7300
	42.6	3710	3520	3500	3440	3120	2830	15.0	9.7	2.000	4.000	100	4B	7300
	46.6	3740	3190	2850	2850	2850	2710	14.2	10.3	2.000	4.000	100	4B	7300
	50.3	3960	3750	3690	3540	3430	2780	15.0	9.8	2.000	4.000	100	4B	7300
	63.1	3740	3190	2850	2850	2850	2710	10.9	9.2	2.000	4.000	100	4B	7300
	78.7	3740	3190	2850	2850	2850	2710	9.0	8.5	2.000	4.000	100	4B	7300
	97.0	3010	2560	2390	2390	2390	2390	5.9	7.6	2.000	4.000	50	4A	7300
	121	3010	2560	2390	2390	2390	2390	4.9	7.4	2.000	4.000	50	4A	7300
R4	89.4	3710	3520	3500	3440	3120	2830	9.4	7.4	2.000	4.000	50	4A	7300
	109	3710	3520	3500	3440	3120	2830	7.8	7.4	2.000	4.000	50	4A	7300
	129	3960	3750	3690	3540	3430	2780	7.1	7.5	2.000	4.000	50	4A	7300
	148	3710	3520	3500	3440	3120	2830	5.9	6.7	2.000	4.000	50	4A	7300
	158	3960	3750	3690	3540	3430	2780	5.9	7.5	2.000	4.000	50	4A	7300
	185	3710	3520	3500	3440	3080	2830	4.7	6.2	2.000	4.000	50	4A	7300
	214	3960	3750	3690	3540	3430	2780	4.4	6.8	2.000	4.000	50	4A	7300
	227	3710	3520	3500	3440	3120	2830	3.9	6.3	2.000	4.000	50	4A	7300
	267	3960	3750	3690	3540	3430	2780	3.5	6.3	2.000	4.000	50	4A	7300
	290	3960	3750	3690	3540	3430	2780	3.2	6.2	2.000	4.000	50	4A	7300
	307	3710	3520	3500	3440	3120	2830	2.9	5.8	2.000	4.000	50	4A	7300
	338	3010	2560	2390	2390	2390	2390	1.9	5.6	2.000	4.000	50	4A	7300
	364	3740	3190	2850	2850	2850	2710	2.3	5.9	2.000	4.000	50	4A	7300
	414	3010	2560	2390	2390	2390	2390	1.6	5.5	2.000	4.000	50	4A	7300
	452	3960	3710	3660	3540	3430	2780	2.1	5.4	2.000	4.000	50	4A	7300
	560	3010	2560	2390	2390	2390	2390	1.2	5.1	2.000	4.000	50	4A	7300
	699	3010	2560	2390	2390	2390	2390	0.93	4.9	2.000	4.000	50	4A	7300

GTN05 R — 5600 Nm

	i	M_{n2} [Nm]						P_1	P_{TB}	n_1	n_{1max}	M_b		M_{2max}
		$n_2 \cdot h$	$n_2 \cdot h$	$n_2 \cdot h$	$n_2 \cdot h$	$n_2 \cdot h$	$n_2 \cdot h$							
	1:	10000	25000	50000	100000	500000	1000000	[kW]	[kW]	[min-1]	[min-1]	[Nm]		[Nm]
R2	9.23	4650	4050	4000	3870	2390	1940	35	17.8	1800	3800	440	4L	7700
	10.9	5300	4720	4720	4350	2680	2180	35	18.5	1800	3800	440	4L	7700
	13.7	5600	5040	4470	4280	3150	2560	35	17.0	1800	3800	440	4L	7700
	15.9	4690	4000	3600	3600	3500	2840	35	15.1	1800	3800	330	4H	7700
	19.2	3800	3300	3100	3100	3000	2790	32	14.0	1800	3800	260	4F	7700
R3	25.7	4680	4490	4490	4490	3800	3090	15.0	10.9	2000	4000	260	4F	8800
	31.5	4700	4490	4490	4490	3750	3040	15.0	11.2	2000	4000	260	4F	8800
	37.1	5800	5500	5480	5300	4210	3420	15.0	11.3	2000	4000	260	4F	8800
	42.6	4700	4450	4430	4430	3630	2950	15.0	10.0	2000	4000	160	4D	8800
	46.6	5600	5040	4470	4400	4280	3490	15.0	10.6	2000	4000	160	4D	8800
	50.3	5530	5350	5300	5230	4070	3310	15.0	10.0	2000	4000	160	4D	8800
	54.2	4690	4000	3600	3600	3550	3460	15.0	9.8	2000	4000	100	4B	8800
	63.1	5600	5040	4470	4400	4280	3490	15.0	9.4	2000	4000	100	4B	8800
	73.3	4690	4000	3600	3600	3550	3460	12.3	8.8	2000	4000	100	4B	8800
	78.7	5600	4900	4470	4400	4280	3490	14.3	8.7	2000	4000	100	4B	8800
	91.5	4690	4000	3600	3600	3550	3460	10.2	8.1	2000	4000	100	4B	8800
	114	4430	4000	3600	3600	3500	3460	8.6	7.9	2000	4000	50	4A	8800
R4	129	5800	5480	5480	5300	4270	3470	10.3	7.6	2000	4000	50	4A	8800
	148	4700	4490	4490	4490	3800	3090	7.4	6.9	2000	4000	50	4A	8800
	158	5800	5500	5480	5300	4210	3420	8.6	7.6	2000	4000	50	4A	8800

C

GTN05 R — 5600 Nm

	i	M_{n2} [Nm]						P_1	P_{TB}	n_1	n_{1max}	M_b		M_{2max}
		$n_2 \cdot h$	$n_2 \cdot h$	$n_2 \cdot h$	$n_2 \cdot h$	$n_2 \cdot h$	$n_2 \cdot h$							
	1:	10000	25000	50000	100000	500000	1000000	[kW]	[kW]	[min^{-1}]	[min^{-1}]	[Nm]		[Nm]
R4	185	4700	4490	4490	4490	3800	3090	6.0	6.4	2000	4000	50	4A	8800
	214	5800	5500	5480	5300	4210	3420	6.4	6.9	2000	4000	50	4A	8800
	231	4690	4000	3600	3600	3550	3460	4.7	6.8	2000	4000	50	4A	8800
	255	4690	4000	3600	3600	3550	3460	4.3	6.3	2000	4000	50	4A	8800
	290	5530	5400	5300	5230	4070	3310	4.5	6.3	2000	4000	50	4A	8800
	313	4690	4000	3600	3600	3550	3460	3.5	6.2	2000	4000	50	4A	8800
	336	5600	5040	4470	4400	4280	3490	3.9	6.1	2000	4000	50	4A	8800
	364	5600	5040	4470	4400	4280	3490	3.6	6.0	2000	4000	50	4A	8800
	390	4690	4000	3600	3600	3550	3460	2.8	5.8	2000	4000	50	4A	8800
	452	4750	4750	4750	4750	3660	3210	2.5	5.5	2000	4000	50	4A	8800
	528	4690	4000	3600	3600	3550	3460	2.1	5.4	2000	4000	50	4A	8800
	567	5600	4900	4470	4400	4280	3490	2.3	5.3	2000	4000	50	4A	8800
	659	4690	4000	3600	3600	3550	3460	1.7	5.0	2000	4000	50	4A	8800
	797	3800	3300	3100	3100	3000	2790	1.1	4.8	2000	4000	50	4A	8800
	824	4690	4000	3600	3600	3550	3460	1.3	4.8	2000	4000	50	4A	8800

GTN06 R — 7300 Nm

	i	M_{n2} [Nm]						P_1	P_{TB}	n_1	n_{1max}	M_b		M_{2max}
		$n_2 \cdot h$	$n_2 \cdot h$	$n_2 \cdot h$	$n_2 \cdot h$	$n_2 \cdot h$	$n_2 \cdot h$							
	1:	10000	25000	50000	100000	500000	1000000	[kW]	[kW]	[min^{-1}]	[min^{-1}]	[Nm]		[Nm]
R2	9.23	4650	4050	4000	3870	2390	1940	35	18.8	1800	3800	440	4L	12000
	10.9	5300	4720	4720	4350	2680	2180	35	19.9	1800	3800	440	4L	12000
	13.7	6500	5920	5920	5100	3150	2560	35	18.2	1800	3800	440	4L	12000
	15.9	7300	6890	6530	5670	3500	2840	35	16.3	1800	3800	440	4L	12000
	19.2	7000	5900	5500	5400	3990	3240	35	15.2	1800	3800	400	4K	12000
R3	33.2	8020	8020	8020	8020	5680	4620	35	14.3	2000	4000	260	4F	14900
	39.2	9770	9340	9340	9300	6110	4960	35	14.6	2000	4000	260	4F	14900
	46.3	10420	9850	9850	9600	6860	5570	35	14.8	2000	4000	260	4F	14900
	58.1	9560	9100	9100	9100	6680	5430	35	13.6	2000	4000	260	4F	14900
	67.5	7890	7590	7590	7590	6620	5380	25	12.4	2000	4000	260	4F	14900
	72.9	10080	9350	8300	7950	6810	5530	27	12.7	2000	4000	160	4D	14900
	84.7	9540	9350	8300	7950	6810	5530	23	11.6	2000	4000	160	4D	14900
	98.5	8630	7370	6530	6500	6460	5480	17.7	10.8	2000	4000	100	4B	14900
	119	8500	7370	6530	6500	6460	5480	15.2	10.1	2000	4000	100	4B	14900
	144	7000	5900	5500	5500	5040	5040	10.7	9.7	2000	4000	100	4B	14900
R4	158	10420	9850	9850	9600	6860	5570	14.9	9.9	2000	4000	100	4B	14900
	168	8320	7700	7700	7530	5950	4830	11.3	9.3	2000	4000	100	4B	14900
	181	9450	9450	9450	9450	6970	5660	11.6	8.9	2000	4000	100	4B	14900
	214	10420	9850	9850	9600	6860	5570	11.1	8.9	2000	4000	50	4A	14900
	230	7890	7590	7590	7590	6620	5380	7.7	8.8	2000	4000	50	4A	14900
	249	10080	9350	8300	7950	6810	5530	9.0	8.9	2000	4000	50	4A	14900
	289	9540	9350	8300	7950	6810	5530	7.6	8.3	2000	4000	50	4A	14900
	312	7890	7590	7590	7590	6620	5380	5.7	7.9	2000	4000	50	4A	14900
	389	8500	7590	7590	7590	6620	5380	5.2	7.3	2000	4000	50	4A	14900
	420	10080	9350	8300	7950	6810	5530	5.4	7.4	2000	4000	50	4A	14900
	455	8630	7370	6530	6500	6460	5480	4.4	7.2	2000	4000	50	4A	14900
	488	9540	9350	8300	7950	6810	5530	4.5	7.0	2000	4000	50	4A	14900
	550	8500	7370	6530	6500	6460	5480	3.7	6.8	2000	4000	50	4A	14900
	590	9500	8500	7800	7800	6810	5530	3.8	6.7	2000	4000	50	4A	14900
	665	7000	5900	5500	5500	5040	5040	2.5	6.5	2000	4000	50	4A	14900
	830	7000	5900	5500	5500	5040	5040	2.0	6.1	2000	4000	50	4A	14900

C

GTN07 R — 14000 Nm

	i	M_{n2} [Nm]						P_1	P_{TB}	n_1	n_{1max}	M_b		M_{2max}
		$n_2 \cdot h$	$n_2 \cdot h$	$n_2 \cdot h$	$n_2 \cdot h$	$n_2 \cdot h$	$n_2 \cdot h$							
	1:	10000	25000	50000	100000	500000	1000000	[kW]	[kW]	[min^{-1}]	[min^{-1}]	[Nm]		[Nm]
R2	13.0	9000	8500	8270	7960	6570	5340	85	*	1800	3800	1000	5K	18600
	15.5	11400	10690	9630	9520	7440	6040	85	*	1800	3800	1000	5K	21000
	19.8	14000	12700	11300	10790	8850	7190	85	*	1800	3800	800	5G	21000
	23.5	11000	9600	8700	8700	8240	7490	74	*	1800	3800	500	5C	21000
R3	31.6	9000	9000	9000	8300	5490	4460	35	17.3	2000	4000	400	4K	18600
	37.7	15680	14890	12400	10070	6210	5050	35	16.6	2000	4000	440	4L	21000
	44.6	15680	14890	13930	11310	6980	5670	35	16.8	2000	4000	400	4K	21000
	55.9	15680	14890	14890	13260	8180	6650	35	15.8	2000	4000	330	4H	21000
	65.0	14670	14010	14010	13510	9090	7380	35	14.6	2000	4000	260	4F	21000
	71.8	14840	12700	11300	10790	9340	7590	35	15.2	2000	4000	260	4F	21000
	78.6	12300	12300	12300	12300	9560	7770	35	13.8	2000	4000	260	4F	21000
	83.4	14840	12700	11300	10790	9340	7590	33	14.1	2000	4000	260	4F	21000
	99.0	11000	9600	8700	8700	8240	7490	23	13.1	2000	4000	160	4D	21000
	120	11000	9600	8700	8700	8240	7490	19.9	12.4	2000	4000	160	4D	21000
R4	152	15680	14890	14890	13510	9560	7770	15.0	11.9	2000	4000	100	4B	21000
	165	14840	12700	11300	10790	9340	7590	15.0	11.5	2000	4000	100	4B	21000
	191	15680	14890	14890	13510	9560	7770	15.0	11.2	2000	4000	100	4B	21000
	206	15680	14890	14890	13510	9560	7770	15.0	10.8	2000	4000	100	4B	21000
	232	14840	12700	11300	10790	9340	7590	14.3	10.3	2000	4000	100	4B	21000
	258	15680	14890	14890	13510	9560	7770	13.8	10.2	2000	4000	100	4B	21000
	284	14840	12700	11300	10790	9340	7590	11.6	10.2	2000	4000	100	4B	21000
	300	15000	14010	14010	13510	9560	7770	11.8	9.6	2000	4000	100	4B	21000
	331	14840	12700	11300	10790	9340	7590	10.0	9.9	2000	4000	50	4A	21000
	363	12300	12300	12300	12300	9560	7770	8.0	9.1	2000	4000	50	4A	21000
	413	14840	12700	11300	10790	9340	7590	8.0	9.3	2000	4000	50	4A	21000
	453	15000	13800	12900	12500	9560	7770	7.8	8.5	2000	4000	50	4A	21000
	490	11000	9600	8700	8700	8240	7490	5.3	8.7	2000	4000	50	4A	21000
	581	14330	12710	11300	10790	9340	7590	5.7	8.3	2000	4000	50	4A	21000
	690	11000	9600	8700	8700	8240	7490	3.8	7.9	2000	4000	50	4A	21000

GTN09 R — 16460 Nm

	i	M_{n2} [Nm]						P_1	P_{TB}	n_1	n_{1max}	M_b		M_{2max}
		$n_2 \cdot h$	$n_2 \cdot h$	$n_2 \cdot h$	$n_2 \cdot h$	$n_2 \cdot h$	$n_2 \cdot h$							
	1:	10000	25000	50000	100000	500000	1000000	[kW]	[kW]	[min^{-1}]	[min^{-1}]	[Nm]		[Nm]
R2	13.0	9800	9120	8270	7960	6570	5340	85	*	1800	3800	1000	5K	27400
	15.5	11400	10690	9630	9520	7440	6040	85	*	1800	3800	1000	5K	27400
	19.8	14000	13270	12270	12270	8850	7190	85	*	1800	3800	1000	5K	27400
	23.5	16460	14070	12500	12370	9980	8110	85	*	1800	3800	800	5G	27400
R3	31.6	12800	12310	10960	8900	5490	4460	35	23.7	2000	4000	440	4L	27900
	37.7	15830	15260	12400	10070	6210	5050	35	23.0	2000	4000	440	4L	29000
	44.6	18670	17150	13930	11310	6980	5670	35	23.3	2000	4000	400	4K	29000
	55.9	18510	17140	16330	13260	8180	6650	35	21.8	2000	4000	400	4K	29000
	65.0	14670	14300	14300	14010	9090	7380	35	19.9	2000	4000	260	4F	29000
	71.8	21980	19060	16940	15790	9740	7910	35	21.0	2000	4000	330	4H	29000
	83.4	18300	18100	16940	16190	10830	8790	35	19.3	2000	4000	260	4F	29000
	99.0	17000	14400	13000	13000	12210	9910	35	18.0	2000	4000	260	4F	29000
	120	17000	14400	13000	13000	12370	10280	30	16.9	2000	4000	160	4D	29000
R4	152	21620	21260	21260	18580	11460	9310	15.0	15.8	2000	4000	160	4D	29000
	165	21980	19060	16940	16190	12810	10410	15.0	15.4	2000	4000	160	4D	29000
	191	18510	17500	17500	17140	11160	9070	15.0	14.9	2000	4000	160	4D	29000
	206	21620	21260	21260	18580	11460	9310	15.0	14.2	2000	4000	160	4D	29000
	232	18300	18100	16940	16190	12810	10410	15.0	13.7	2000	4000	100	4B	29000
	258	18510	17500	17500	17140	11160	9070	15.0	13.4	2000	4000	100	4B	29000
	284	18300	18100	16940	16190	12810	10410	15.0	13.6	2000	4000	100	4B	29000
	331	21980	19060	16940	16190	12810	10410	15.0	13.1	2000	4000	100	4B	29000
	374	14670	14300	14300	14010	11060	8990	9.2	11.7	2000	4000	100	4B	29000

C

GTN09 R — 16460 Nm

	i	M_{n2} [Nm]						P_1	P_{TB}	n_1	n_{1max}	M_b		M_{2max}
		$n_2 \cdot h$	$n_2 \cdot h$	$n_2 \cdot h$	$n_2 \cdot h$	$n_2 \cdot h$	$n_2 \cdot h$							
	1:	10000	25000	50000	100000	500000	1000000	[kW]	[kW]	[min-1]	[min-1]	[Nm]		[Nm]
R4	413	21980	19060	16940	16190	12810	10410	12.0	12.1	2000	4000	100	4B	29000
	457	17000	14400	13000	13000	12370	10280	8.8	11.7	2000	4000	50	4A	29000
	490	17000	14400	13000	13000	12370	10280	8.2	11.5	2000	4000	50	4A	29000
	581	15800	15800	15800	15000	12810	10410	6.4	10.9	2000	4000	50	4A	29000
	690	17000	14400	13000	13000	12370	10280	5.8	10.4	2000	4000	50	4A	29000

GTN10 R — 33640 Nm

	i	M_{n2} [Nm]						P_1	P_{TB}	n_1	n_{1max}	M_b		M_{2max}
		$n_2 \cdot h$	$n_2 \cdot h$	$n_2 \cdot h$	$n_2 \cdot h$	$n_2 \cdot h$	$n_2 \cdot h$							
	1:	10000	25000	50000	100000	500000	1000000	[kW]	[kW]	[min-1]	[min-1]	[Nm]		[Nm]
R2	12.0	24880	24320	24320	24320	15600	12670	130	*	1500	2500	3200	6L	47600
	15.4	30110	25640	22700	21660	18580	15090	130	*	1500	2500	2600	6K	47600
	18.3	23930	20350	18000	17810	17810	16620	130	*	1500	2500	2100	6G	47600
	16.6	33640	31900	29360	26500	17870	14510	130	*	1500	2500	2600	6K	47600
	21.3	30110	25640	22700	21660	20710	16820	130	*	1500	2500	2600	6K	47600
	25.3	23930	20350	18000	17810	17810	16620	118	*	1500	2500	2100	6G	47600
R3	37.7	15800	14860	12070	9800	6050	4910	35	27.7	1800	3800	440	4L	47600
	44.6	18640	16690	13550	11010	6790	5520	35	28.4	1800	3800	440	4L	47600
	55.9	23360	19570	15890	12910	7960	6470	35	26.6	1800	3800	440	4L	47600
	65.0	26060	21740	17660	14340	8850	7190	35	24.6	1800	3800	440	4L	47600
	71.8	29930	23300	18920	15370	9480	7700	35	25.4	1800	3800	440	4L	47600
	78.6	19480	19330	19330	16390	10110	8210	35	23.2	1800	3800	330	4H	47600
	83.4	30110	25640	21030	17080	10540	8560	35	23.6	1800	3800	400	4K	47600
	99.0	23930	20350	18000	17810	11880	9650	35	21.4	1800	3800	330	4H	47600
	120	23930	20350	18000	17810	13580	11030	35	20.4	1800	3800	260	4F	47600
R4	136	30730	30730	28700	23310	14380	11680	35	20.0	2000	4000	260	4F	47600
	160	33640	31900	29360	25750	15890	12910	35	20.9	2000	4000	260	4F	47600
	189	33640	31900	29360	26500	17850	14500	35	21.0	2000	4000	260	4F	47600
	206	30110	25640	22700	21660	18920	15370	35	20.1	2000	4000	260	4F	47600
	238	33640	31900	29360	26500	17380	14110	33	19.6	2000	4000	160	4D	47600
	258	30110	25640	22700	21660	18420	14960	28	18.8	2000	4000	160	4D	47600
	276	28060	28070	28070	26500	17220	13990	24	18.2	2000	4000	160	4D	47600
	305	30110	25640	22700	21660	20710	16820	23	18.9	2000	4000	160	4D	47600
	347	33170	30650	29360	26500	17700	14380	22.6	17.2	2000	4000	160	4D	47600
	383	30110	25640	22700	21660	20710	16820	18.6	17.7	2000	4000	100	4B	47600
	454	23930	20350	18000	17810	17810	16620	12.5	16.3	2000	4000	100	4B	47600
	517	30110	25640	22700	21660	20710	16820	13.8	15.6	2000	4000	100	4B	47600
	590	19480	19330	19330	19330	17120	13900	7.8	14.6	2000	4000	50	4A	47600
	639	23930	20350	18000	17810	17810	16620	8.9	14.5	2000	4000	50	4A	47600
	757	24820	24820	22700	21660	20380	16550	7.8	14.1	2000	4000	50	4A	47600
	898	23930	20350	18000	17810	17810	16620	6.3	13.2	2000	4000	50	4A	47600

GTN11 R — 49210 Nm

	i	M_{n2} [Nm]						P_1	P_{TB}	n_1	n_{1max}	M_b		M_{2max}
		$n_2 \cdot h$	$n_2 \cdot h$	$n_2 \cdot h$	$n_2 \cdot h$	$n_2 \cdot h$	$n_2 \cdot h$							
	1:	10000	25000	50000	100000	500000	1000000	[kW]	[kW]	[min-1]	[min-1]	[Nm]		[Nm]
R2	12.0	24880	24320	24320	24320	15600	12670	150	*	1500	2500	3200	6L	58300
	15.4	31190	31190	31190	30110	18580	15090	150	*	1500	2500	3200	6L	58300
	18.3	36470	31040	27480	27190	20950	17020	150	*	1500	2500	2600	6K	58300
	16.6	45390	43900	35650	28960	17870	14510	150	*	1500	2500	3200	6L	58300
	21.3	47810	41400	36690	34490	21280	17280	150	*	1500	2500	2600	6K	58300
	25.3	36470	31040	27480	27190	23990	19490	150	*	1500	2500	2100	6G	58300

C

GTN11 R — 49210 Nm

	i	M_{n2} [Nm]						P_1	P_{TB}	n_1	n_{1max}	M_b		M_{2max}
		$n_2 \cdot h$	$n_2 \cdot h$	$n_2 \cdot h$	$n_2 \cdot h$	$n_2 \cdot h$	$n_2 \cdot h$							
	1:	10000	25000	50000	100000	500000	1000000	[kW]	[kW]	[min-1]	[min-1]	[Nm]		[Nm]
R3	53.0	32410	32420	32420	27690	17090	13880	85	24.0	2000	4000	800	5G	58300
	63.2	41360	39670	38580	31340	19340	15710	85	23.5	2000	4000	800	5G	58300
	68.0	41500	41400	36690	32980	20350	16530	85	23.4	2000	4000	800	5G	58300
	81.1	47810	41400	36690	35010	23030	18700	85	22.7	2000	4000	800	5G	58300
	96.3	33520	32020	32020	32020	23990	19490	77	21.8	2000	4000	500	5C	58300
	104	47810	41400	36690	35010	27420	22270	85	22.3	2000	4000	500	5C	58300
	124	41250	41170	36690	35010	28570	23200	77	21.1	2000	4000	400	5B	58300
	147	36470	31040	27480	27190	27190	23670	55	20.2	2000	4000	400	5B	58300
R4	154	49210	38650	31380	25490	15730	12780	35	23.8	2000	4000	440	4L	58300
	182	49210	43410	35250	28630	17670	14350	35	23.8	2000	4000	330	4H	58300
	198	47810	41400	36690	30360	18730	15220	35	22.8	2000	4000	260	4F	58300
	229	49210	46590	41340	33570	20710	16830	35	22.5	2000	4000	260	4F	58300
	266	49210	46590	45450	37310	23010	18700	35	21.0	2000	4000	260	4F	58300
	294	47810	41400	36690	35010	24670	20040	35	21.6	2000	4000	160	4D	58300
	341	47810	41400	36690	35010	27410	22260	33	20.3	2000	4000	160	4D	58300
	413	47810	41400	36690	35010	29500	23960	27	19.2	2000	4000	160	4D	58300
	438	47810	41400	36690	35010	28930	23490	26	19.6	2000	4000	100	4D	58300
	490	33520	32020	32020	32020	23990	19490	16.2	18.1	2000	4000	100	4B	58300
	520	41250	41170	36690	35010	28570	23200	18.8	18.5	2000	4000	100	4B	58300
	629	41250	41170	36690	35010	28570	23200	15.5	17.5	2000	4000	100	4B	58300
	746	36470	31040	27480	27190	27190	23670	11.6	16.8	2000	4000	100	4B	58300

GTN13 R — 60940 Nm

	i	M_{n2} [Nm]						P_1	P_{TB}	n_1	n_{1max}	M_b		M_{2max}
		$n_2 \cdot h$	$n_2 \cdot h$	$n_2 \cdot h$	$n_2 \cdot h$	$n_2 \cdot h$	$n_2 \cdot h$							
	1:	10000	25000	50000	100000	500000	1000000	[kW]	[kW]	[min-1]	[min-1]	[Nm]		[Nm]
R2	12.2	25160	24620	24620	24620	15740	12790	150	*	1500	2500	3200	6L	86300
	15.9	32070	32070	32070	30710	18950	15390	150	*	1500	2500	3200	6L	86300
	19.1	38580	34160	30260	30200	21580	17530	150	*	1500	2500	3200	6L	86300
	16.8	45900	44290	35970	29210	18030	14640	150	*	1500	2500	3200	6L	105000
	22.0	57130	48700	43150	35170	21700	17630	150	*	1500	2500	3200	6L	105000
	26.4	40100	34160	30260	30200	24710	20070	150	*	1500	2500	2600	6K	105000
R3	53.7	35830	33520	33520	27940	17240	14000	85	28.9	1800	3800	800	5G	105000
	64.0	41820	40180	38930	31620	19510	15850	85	28.6	1800	3800	800	5G	105000
	69.9	45180	44000	41410	33630	20750	16860	85	27.2	1800	3800	800	5G	105000
	82.2	52030	51920	46350	37650	23230	18870	85	28.2	1800	3800	800	5G	105000
	97.5	50810	48640	48640	42450	26190	21270	85	26.7	1800	3800	630	5E	105000
	107	57130	48700	43150	41440	27970	22720	85	26.3	1800	3800	630	5E	105000
	127	57130	48700	43150	41440	31530	25610	85	24.9	1800	3800	500	5C	105000
	153	40100	34160	30260	30200	30200	29160	53	23.9	1800	3800	400	5B	105000
R4	185	57650	43780	35560	28890	17820	14480	35	29.1	2000	4000	400	4K	105000
	201	60940	46420	37700	30630	18900	15350	35	28.0	2000	4000	400	4K	105000
	237	60940	52150	42350	34400	21230	17240	35	28.0	2000	4000	260	4F	105000
	281	50810	48640	47760	38780	23930	19440	35	26.1	2000	4000	260	4F	105000
	309	57130	48700	43150	41420	25550	20760	35	26.0	2000	4000	260	4F	105000
	346	60940	57660	55180	44810	27650	22460	35	24.4	2000	4000	260	4F	105000
	387	57130	48700	43150	41440	29970	24340	35	24.4	2000	4000	160	4D	105000
	450	57130	48700	43150	41440	33300	27040	30	22.9	2000	4000	160	4D	105000
	496	50810	48640	48640	48640	33200	26970	24	21.6	2000	4000	160	4D	105000
	535	57130	48700	43150	41440	37540	30490	25	21.6	2000	4000	160	4D	105000
	647	57130	48700	43150	41440	39970	32460	21	20.4	2000	4000	100	4B	105000
	778	40100	34160	30260	30200	30200	30200	12.2	19.6	2000	4000	100	4B	105000

C

GTN14 R — 80640 Nm

	i	M_{n2} [Nm]						P_1	P_{TB}	n_1	n_{1max}	M_b		M_{2max}
		$n_2 \cdot h$	$n_2 \cdot h$	$n_2 \cdot h$	$n_2 \cdot h$	$n_2 \cdot h$	$n_2 \cdot h$							
	1:	10000	25000	50000	100000	500000	1000000	[kW]	[kW]	[min^{-1}]	[min^{-1}]	[Nm]		[Nm]
R3	51.1	79616	75696	66528	54032	33344	27080	130	42	1500	2500	2100	6G	115000
	65.5	78024	72432	72432	64352	39704	32248	130	42	1500	2500	2100	6G	115000
	77.8	61848	59496	59488	59488	43712	35504	130	39	1500	2500	2100	6G	115000
	82.3	73312	67496	62304	59720	46544	37808	130	40	1500	2500	2100	6G	115000
	97.6	73304	67496	62304	59720	51240	41616	126	37	1500	2500	2100	6G	115000
	113	63256	54024	47944	47400	47400	41792	93	36	1500	2500	2100	6G	115000
	70.7	80640	75696	75696	61888	38176	31016	130	42	1500	2500	2100	6G	115000
	90.7	78016	72432	72432	71136	44248	35936	130	41	1500	2500	3200	6L	115000
	108	61848	59496	59488	59488	43712	35504	98	37	1500	2500	2600	6K	115000
	114	73312	67496	62304	59720	51864	42128	109	38	1500	2500	2600	6K	115000
	135	73304	67496	62304	59720	51240	41616	93	35	1500	2500	2100	6G	115000
	157	63256	54024	47944	47400	47400	41792	69	35	1500	2500	2100	6G	115000
R4	160	52250	39680	32230	26180	16160	13120	35	45	1800	3800	440	4L	115000
	189	58690	44570	36200	29410	18150	14740	35	45	1800	3800	440	4L	115000
	238	68810	52250	42440	34470	21270	17280	35	42	1800	3800	400	4K	115000
	276	76460	58060	47160	38310	23640	19200	35	39	1800	3800	400	4K	115000
	354	91050	69130	56160	45620	28150	22870	35	37	1800	3800	400	4K	115000
	421	77310	74370	63340	51430	31730	25780	31	34	1800	3800	330	4H	115000
	445	73312	64864	52664	42784	26400	21448	35	35	1800	3800	400	4K	115000
	528	73312	67496	59400	48232	29760	24176	30	33	1800	3800	330	4H	115000
	614	63256	54024	47944	47400	33080	26864	22	32	1800	3800	260	4F	115000

GTN15 R — 100800 Nm

	i	M_{n2} [Nm]						P_1	P_{TB}	n_1	n_{1max}	M_b		M_{2max}
		$n_2 \cdot h$	$n_2 \cdot h$	$n_2 \cdot h$	$n_2 \cdot h$	$n_2 \cdot h$	$n_2 \cdot h$							
	1:	10000	25000	50000	100000	500000	1000000	[kW]	[kW]	[min^{-1}]	[min^{-1}]	[Nm]		[Nm]
R3	51.1	99510	94620	83160	67540	41680	33850	150	42	1500	2500	2600	6K	135000
	65.5	100800	94620	94620	80440	49630	40310	150	42	1500	2500	2100	6G	135000
	77.8	100800	94620	94620	88920	55960	45450	150	40	1500	2500	2100	6G	135000
	82.3	91640	84370	77880	74650	58180	47260	150	39	1500	2500	1500	6E	135000
	97.6	91640	84370	77880	74650	65060	52850	150	38	1500	2500	1500	6E	135000
	113	79070	67530	59930	59250	59250	52240	116	37	1500	2500	850	6B	135000
	70.7	100800	94620	94620	77360	47720	38770	150	42	1500	2500	2100	6G	135000
	90.7	100800	94620	94620	88920	56840	46170	150	41	1500	2500	1500	6E	135000
	108	100800	94620	94620	88920	64090	52050	150	39	1500	2500	1500	6E	135000
	114	91630	84370	77880	74650	65060	52850	136	38	1500	2500	1100	6C	135000
	135	91630	84370	77880	74650	65060	52850	116	36	1500	2500	1100	6C	135000
	157	79070	67530	59930	59250	59250	52240	87	35	1500	2500	850	6B	135000
R4	225	100800	94620	91070	73970	45640	37070	90	37	1800	3800	600	5E	135000
	269	100800	94620	94620	83700	51650	41950	80	36	1800	3800	500	5C	135000
	345	100800	94620	94620	88920	61500	49960	62	35	1800	3800	400	5B	135000
	409	100800	94620	94620	88920	64070	52040	52	33	1800	3800	400	5B	135000
	525	100800	94620	94620	88920	67360	54720	41	31	1800	3800	400	5B	135000
	623	100800	94620	94620	88920	67360	54720	34	30	1800	3800	400	5B	135000
	659	91640	84370	77880	74650	65060	52850	30	30	1800	3800	400	5B	135000
	782	91640	84370	77880	74650	65060	52850	25	28.9	1800	3800	400	5B	135000
	909	79070	67530	59930	59250	59250	52240	18.5	28.4	1800	3800	400	5B	135000

C

GTN16 R — 134390 Nm

	i	M_{n2} [Nm]						P_1	P_{TB}	n_1	n_{1max}	M_b		M_{2max}
		$n_2 \cdot h$	$n_2 \cdot h$	$n_2 \cdot h$	$n_2 \cdot h$	$n_2 \cdot h$	$n_2 \cdot h$							
	1:	10000	25000	50000	100000	500000	1000000	[kW]	[kW]	[min-1]	[min-1]	[Nm]		[Nm]
R3	51.1	99520	99520	83160	67540	41680	33850	150	46	1500	2500	2600	6K	192000
	64.1	122190	111300	97490	79180	48860	39690	150	45	1500	2500	2600	6K	192000
	65.5	127370	121920	99020	80430	49630	40310	150	47	1500	2500	2600	6K	192000
	77.8	118110	113650	111640	90670	55950	45450	150	45	1500	2500	2100	6G	192000
	82.3	122180	111300	99530	94300	58180	47260	150	44	1500	2500	2100	6G	192000
	97.6	122180	111300	99530	99530	65600	53280	150	42	1500	2500	2100	6G	192000
	70.7	134400	117260	95220	77340	47720	38770	150	47	1500	2500	2100	6G	192000
	88.7	122190	111300	99530	90690	55950	45450	150	44	1500	2500	2100	6G	192000
	90.7	134400	126160	113420	92100	56830	46170	150	46	1500	2500	2100	6G	192000
	108	118110	113650	113640	103860	64070	52050	150	43	1500	2500	1500	6E	192000
	114	122190	111300	99530	99530	66640	54120	150	43	1500	2500	1500	6E	192000
	135	122190	111300	99530	99530	75130	61020	150	41	1500	2500	1500	6E	192000
R4	225	129890	112120	91060	73970	45640	37070	85	40	1800	3800	800	5G	192000
	269	134400	126160	103050	83700	51650	41950	85	39	1800	3800	630	5E	192000
	289	134400	126160	108440	88080	54350	44150	85	39	1800	3800	630	5E	192000
	337	122180	111300	99530	98120	60540	49180	77	37	1800	3800	500	5C	192000
	363	122190	111300	99530	99530	63710	51750	72	37	1800	3800	400	5B	192000
	430	122190	111300	99530	99530	71830	58340	60	35	1800	3800	400	5B	192000
	443	134400	126160	123700	118580	73240	59490	65	36	1800	3800	400	5B	192000
	525	134400	126160	123700	118580	76300	61980	54	34	1800	3800	400	5B	192000
	623	118110	113650	113640	113640	77820	63210	40	32	1800	3800	400	5B	192000
	659	122180	111300	99530	99530	86750	70460	39	32	1800	3800	400	5B	192000
	782	122190	111300	99530	99530	86750	70460	33	31	1800	3800	400	5B	192000

GTN17 R — 207490 Nm

	i	M_{n2} [Nm]						P_1	P_{TB}	n_1	n_{1max}	M_b		M_{2max}
		$n_2 \cdot h$	$n_2 \cdot h$	$n_2 \cdot h$	$n_2 \cdot h$	$n_2 \cdot h$	$n_2 \cdot h$							
	1:	10000	25000	50000	100000	500000	1000000	[kW]	[kW]	[min-1]	[min-1]	[Nm]		[Nm]
R3	49.8	97030	97030	81690	66340	40940	33250	150	47	1500	2500	2600	6K	393000
	64.9	126120	121070	98330	79870	49280	40030	150	48	1500	2500	2600	6K	393000
	78.1	125800	121300	111970	90940	56110	45580	150	48	1500	2500	2600	6K	393000
	83.3	161300	144170	117090	95110	58690	47670	150	47	1500	2500	2600	6K	393000
	100	155950	155950	133340	108290	66820	54280	150	46	1500	2500	2100	6G	393000
	119	150260	128480	114130	112960	75340	61190	150	43	1500	2500	1500	6E	393000
	68.9	151620	115150	93530	75970	46880	38080	150	50	1500	2500	2600	6K	393000
	89.8	179830	138660	112600	91460	56440	45850	150	48	1500	2500	2600	6K	393000
	108	125790	121300	121300	104160	64260	52200	150	46	1500	2500	2100	6G	393000
	115	195640	165120	134080	108910	67200	54600	150	46	1500	2500	2100	6G	393000
	139	155940	155950	148950	124040	76520	62160	150	44	1500	2500	1500	6E	393000
	165	150260	128480	114130	112960	86290	70080	150	41	1500	2500	1100	6C	393000
R4	220	138860	110130	89450	72660	44830	36420	90	42	1800	3800	800	5G	393000
	262	164050	124620	101220	82220	50730	41210	90	41	1800	3800	800	5G	393000
	336	195360	148400	120540	97910	60410	49070	90	40	1800	3800	800	5G	393000
	399	193680	167310	135890	110380	68110	55320	90	38	1800	3800	600	5E	393000
	438	179830	166930	145110	117860	72730	59070	87	38	1800	3800	500	5C	393000
	520	179830	166930	163600	132870	81990	66600	74	36	1800	3800	400	5B	393000
	626	125790	121300	121300	121300	93360	75830	43	34	1800	3800	400	5B	393000
	677	155950	155950	148950	142350	98610	80090	49	35	1800	3800	400	5B	393000
	803	155940	155950	148950	142350	111170	90300	41	33	1800	3800	400	5B	393000
	953	150260	128480	114130	112960	112960	95190	34	32	1800	3800	400	5B	393000

C

GTN18 R — 297550 Nm

	i	M_{n2} [Nm]						P_1	P_{TB}	n_1	n_{1max}	M_b		M_{2max}
		$n_2 \cdot h$	$n_2 \cdot h$	$n_2 \cdot h$	$n_2 \cdot h$	$n_2 \cdot h$	$n_2 \cdot h$							
	1:	10000	25000	50000	100000	500000	1000000	[kW]	[kW]	[min-1]	[min-1]	[Nm]		[Nm]
R4	225	297550	260540	227590	184830	114050	92650	150	62	1500	2500	1500	6E	500000
	288	297550	260540	231740	220140	135810	110320	150	60	1500	2500	1500	6E	500000
	342	297540	260540	231740	223920	153140	124380	150	58	1500	2500	1100	6C	500000
	362	297550	260540	231740	223920	159240	129330	146	58	1500	2500	1100	6C	500000
	430	297550	260540	231740	223920	160590	130440	123	55	1500	2500	850	6B	500000
	499	264710	256160	231740	223920	160590	130440	94	53	1500	2500	850	6B	500000
	311	297550	260540	231740	211740	130610	106110	150	61	1500	2500	1100	6C	500000
	399	297530	260540	231740	223920	155590	126360	132	58	1500	2500	850	6B	500000
	474	297550	260540	231740	223920	160590	130440	111	55	1500	2500	850	6B	500000
	501	297550	260540	231740	223920	160590	130440	105	55	1500	2500	850	6B	500000
	595	297550	260540	231740	223920	160590	130440	89	53	1500	2500	850	6B	500000
	691	264710	256160	231740	223920	160590	130440	68	50	1500	2500	850	6B	500000

GTN19 R — 471190 Nm

	i	M_{n2} [Nm]						P_1	P_{TB}	n_1	n_{1max}	M_b		M_{2max}
		$n_2 \cdot h$	$n_2 \cdot h$	$n_2 \cdot h$	$n_2 \cdot h$	$n_2 \cdot h$	$n_2 \cdot h$							
	1:	10000	25000	50000	100000	500000	1000000	[kW]	[kW]	[min-1]	[min-1]	[Nm]		[Nm]
R4	249	396290	300980	244480	198580	122540	99540	150	85	1500	2500	2100	6G	680000
	320	471190	358410	291120	236470	145920	118530	150	82	1500	2500	2100	6G	680000
	379	443030	383900	311830	253280	156280	126940	150	76	1500	2500	1500	6E	680000
	401	471180	383900	311830	253280	156280	126940	150	78	1500	2500	1500	6E	680000
	475	356250	305810	272430	249240	153790	124910	133	74	1500	2500	1100	6C	680000
	563	356280	305810	272430	249240	153790	124910	112	72	1500	2500	850	6B	680000
	655	336410	305810	272430	249240	153790	124910	91	69	1500	2500	850	6B	680000
	345	453930	344660	279970	227410	140330	114010	150	82	1500	2500	1500	6E	680000
	442	471160	383900	311830	253280	156280	126940	150	78	1500	2500	1500	6E	680000
	525	443030	383900	311830	253280	156280	126940	150	72	1500	2500	1100	6C	680000
	555	471190	383900	311830	253280	156280	126940	150	74	1500	2500	850	6B	680000
	657	356250	305810	272430	249240	153790	124910	96	71	1500	2500	850	6B	680000
	780	356280	305810	272430	249240	153790	124910	81	68	1500	2500	850	6B	680000
	906	336410	305810	272430	249240	153790	124910	66	64	1500	2500	850	6B	680000

GTN21 R — 655200 Nm

	i	M_{n2} [Nm]						P_1	P_{TB}	n_1	n_{1max}	M_b		M_{2max}
		$n_2 \cdot h$	$n_2 \cdot h$	$n_2 \cdot h$	$n_2 \cdot h$	$n_2 \cdot h$	$n_2 \cdot h$							
	1:	10000	25000	50000	100000	500000	1000000	[kW]	[kW]	[min-1]	[min-1]	[Nm]		[Nm]
R4	221	374000	281300	226400	181800	111130	90320	150	113	1500	2500	2600	6K	934000
	288	447500	340100	268500	216800	133790	108740	150	106	1500	2500	2100	6G	934000
	347	506300	377100	307000	247800	152340	123900	150	101	1500	2500	2100	6G	934000
	370	528500	402100	317800	264200	159330	129500	150	101	1500	2500	2100	6G	934000
	446	587310	445420	366500	293970	181430	147460	150	97	1500	2500	2100	6G	934000
	529	536350	503040	410200	331430	204550	166260	150	91	1500	2500	1500	6E	934000
	306	401340	304660	247480	201030	124050	100790	150	110	1500	2500	2100	6G	934000
	399	483180	366770	297930	242020	149350	121350	150	101	1500	2500	2100	6G	934000
	481	550170	417600	339230	275560	170050	138170	132	96	1500	2500	1100	6C	934000
	512	575410	436760	354790	288200	177850	144510	125	97	1500	2500	1100	6C	934000
	617	655200	497290	403960	328150	202500	164540	120	92	1500	2500	1100	6C	934000
	732	536360	517290	420170	341290	210580	171050	113	86	1500	2500	850	6B	934000

C

C

GTN00 L

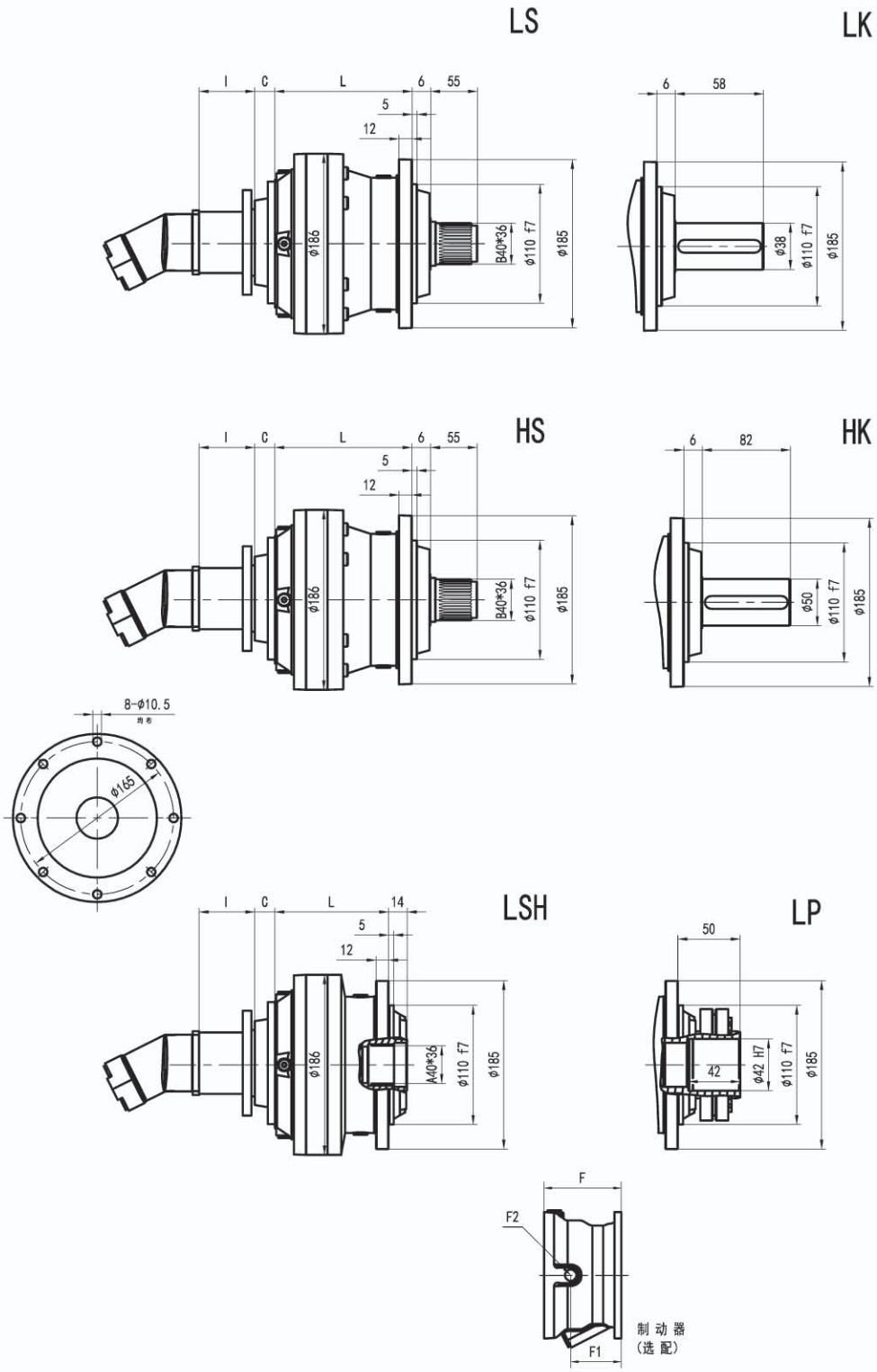
LS
LK
I
C
L
6
55
5
12
58
φ186
B40*36
φ110 f7
φ185
φ38
HS
HK
82
φ50
8-φ10.5
均布
φ165
LSH
LP
14
A40*36
42
φ42 H7
F
F2
F1
制 动 器
(选 配)

GTN00 L

MK

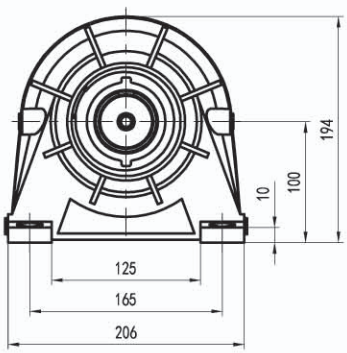

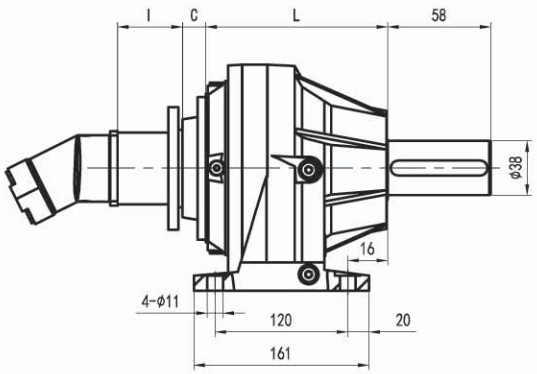

MS

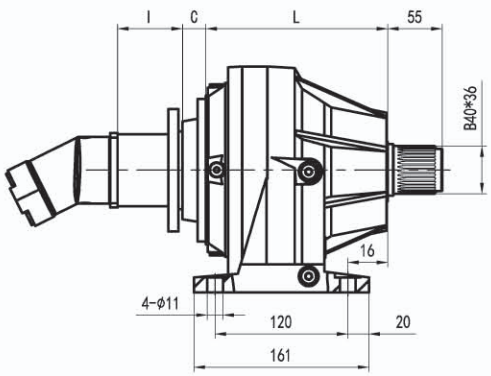

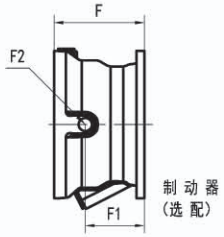

LP输出 LP VERSION	最大输出扭矩 MAX. TRANSMISSIBLE TORQUE	1200 Nm

	L				Kg													
	LS LK	LSH LP	HS HK	MK MS	LS LK	LSH LP	HS HK	MK MS	C	输入 Input	I	F	F1	F2	类型 Type	输入 Input	Kg
GTN00 L1	80	80	115	86	18	16	20	23	37	A	联系厂家	105	65	1/4G	4	A	10
GTN00 L2	133	133	168	139	22	20	24	27	37	A		105	65	1/4G	4	A	10
GTN00 L3	186	186	221	192	26	24	28	31	37	A		105	65	1/4G	4	A	10
GTN00 L4	239	239	274	245	30	28	32	35	37	A		105	65	1/4G	4	A	10

GTN00 L

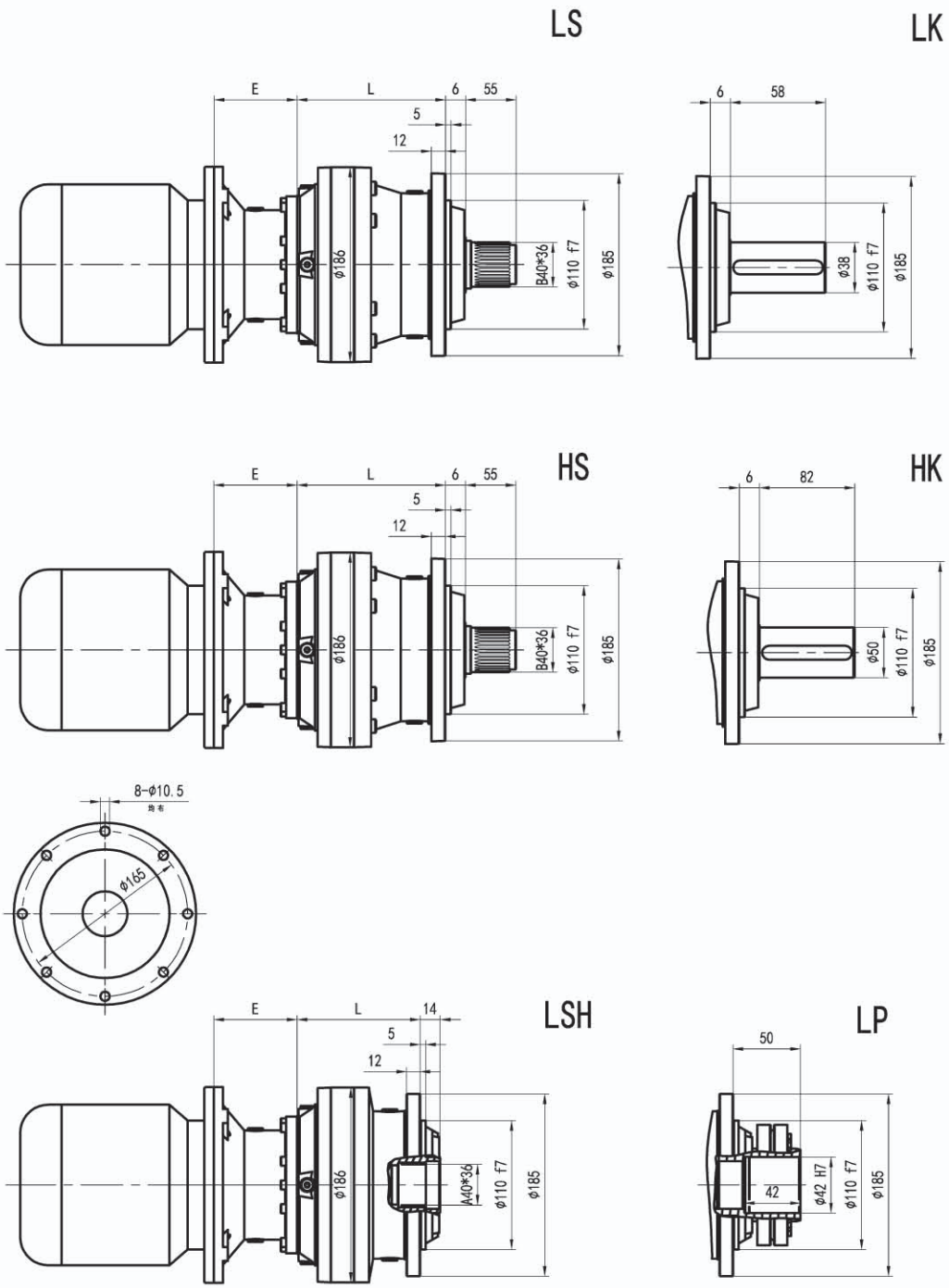
LS
LK
E
L
6
55
5
12
58
φ186
B40*36
φ110 f7
φ185
φ38
HS
HK
82
φ50
8-φ10.5
均布
φ165
LSH
LP
14
50
42
φ42 H7

GTN00 L

MK

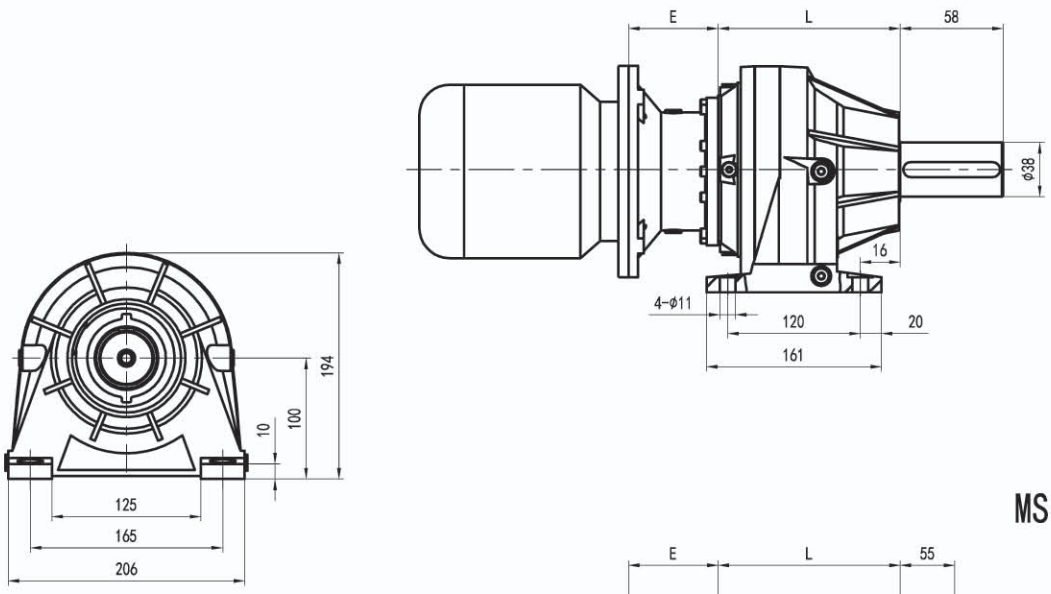

MS

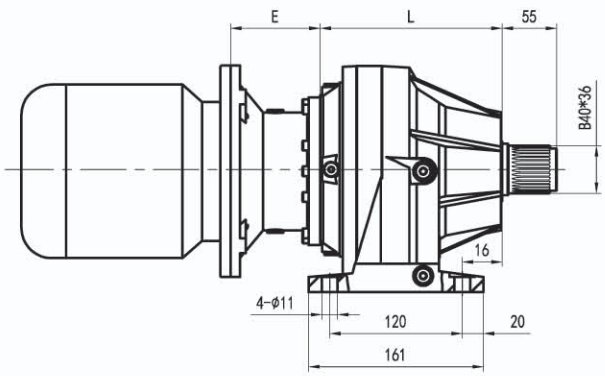

LP输出 LP VERSION	最大输出扭矩 MAX. TRANSMISSIBLE TORQUE	1200 Nm

	L				Kg				E					
	LS LK	LSH LP	HS HK	MK MS	LS LK	LSH LP	HS HK	MK MS	IEC 71	IEC 80	IEC 90	IEC 100	IEC 112	IEC 132
GTN00 L1	80	80	115	86	18	16	20	23	65	84	84	94	94	114
GTN00 L2	133	133	168	139	22	20	24	27	65	84	84	94	94	114
GTN00 L3	186	186	221	192	26	24	28	31	65	84	84	94	94	114
GTN00 L4	239	239	274	245	30	28	32	35	65	84	84	94	94	114

GTN00 L

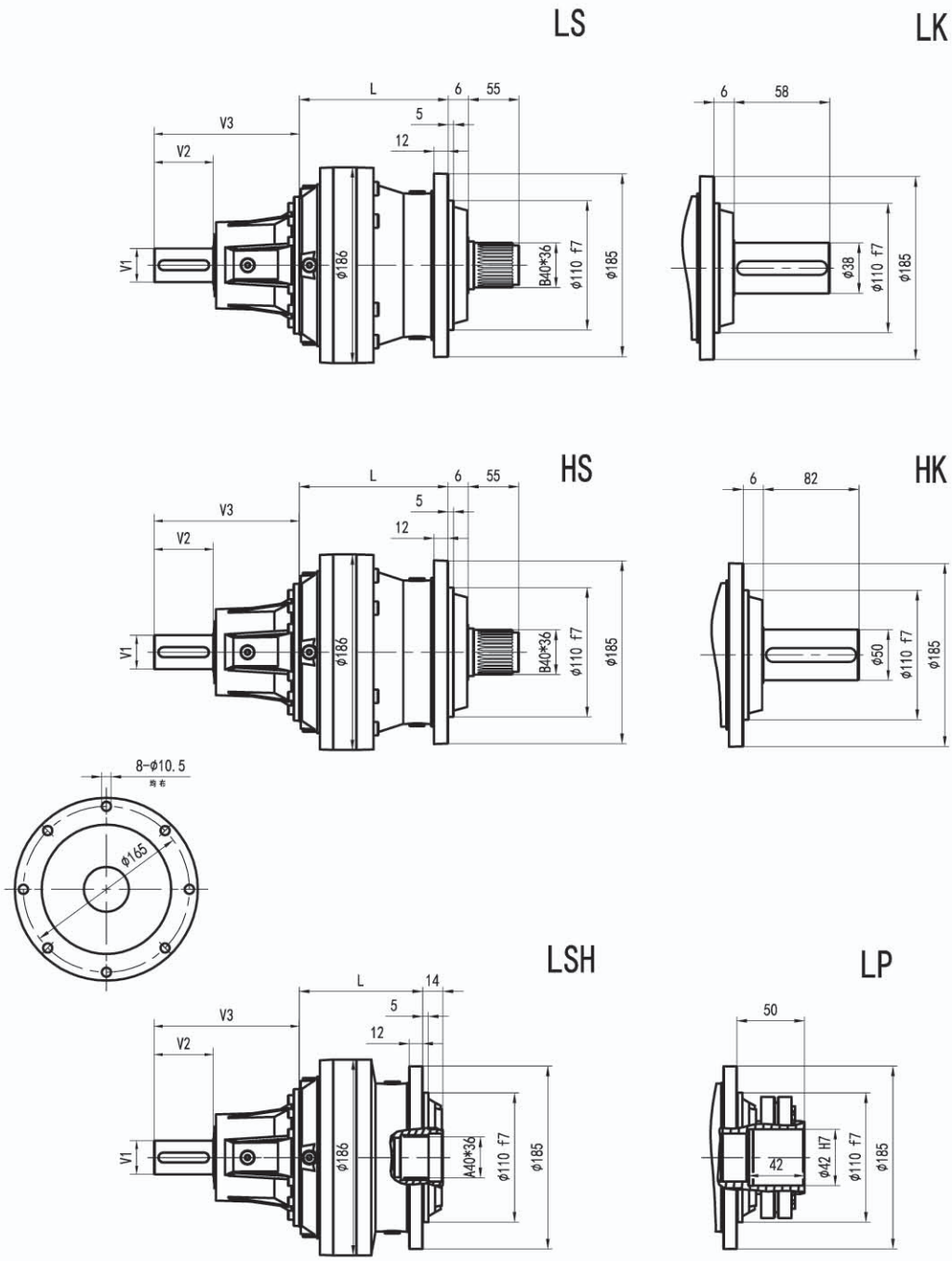
LS
LK
L
6
55
5
12
V3
V2
V1
φ186
B40*36
φ110 f7
φ185
58
φ38
HS
HK
82
φ50
8-φ10.5
均布
φ165
LSH
LP
14
42
φ42 H7

GTN00 L

MK

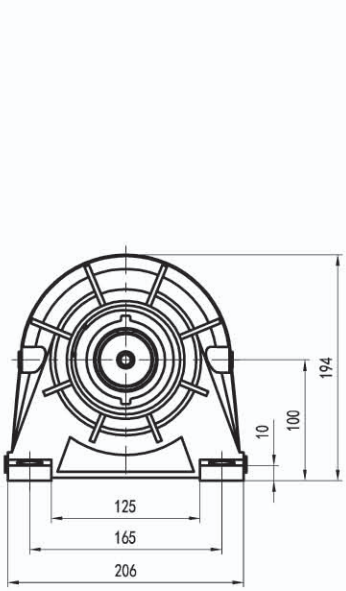

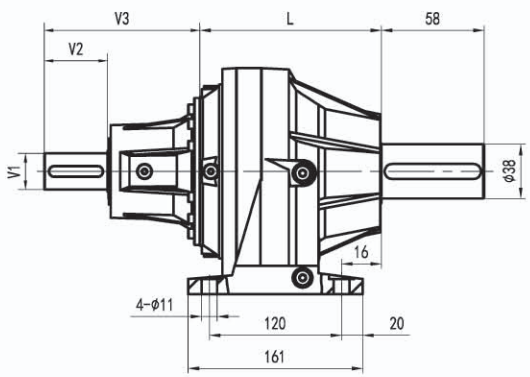

MS

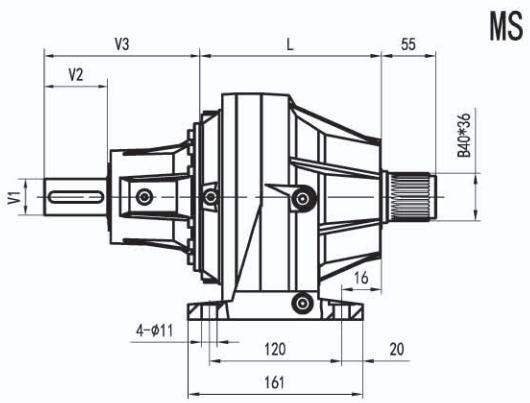

LP输出 LP VERSION	最大输出扭矩 MAX. TRANSMISSIBLE TORQUE	1200 Nm

	L				Kg				V1	V2	V3	Kg	V1	V2	V3	Kg
	LS LK	LSH LP	HS HK	MK MS	LS LK	LSH LP	HS HK	MK MS								
GTN00 L1	80	80	115	86	18	16	20	23	24	36	137.5	6	38	58	158	7
GTN00 L2	133	133	168	139	22	20	24	27	24	36	137.5	6	38	58	158	7
GTN00 L3	186	186	221	192	26	24	28	31	24	36	137.5	6	38	58	158	7
GTN00 L4	239	239	274	245	30	28	32	35	24	36	137.5	6	38	58	158	7

GTN00 R

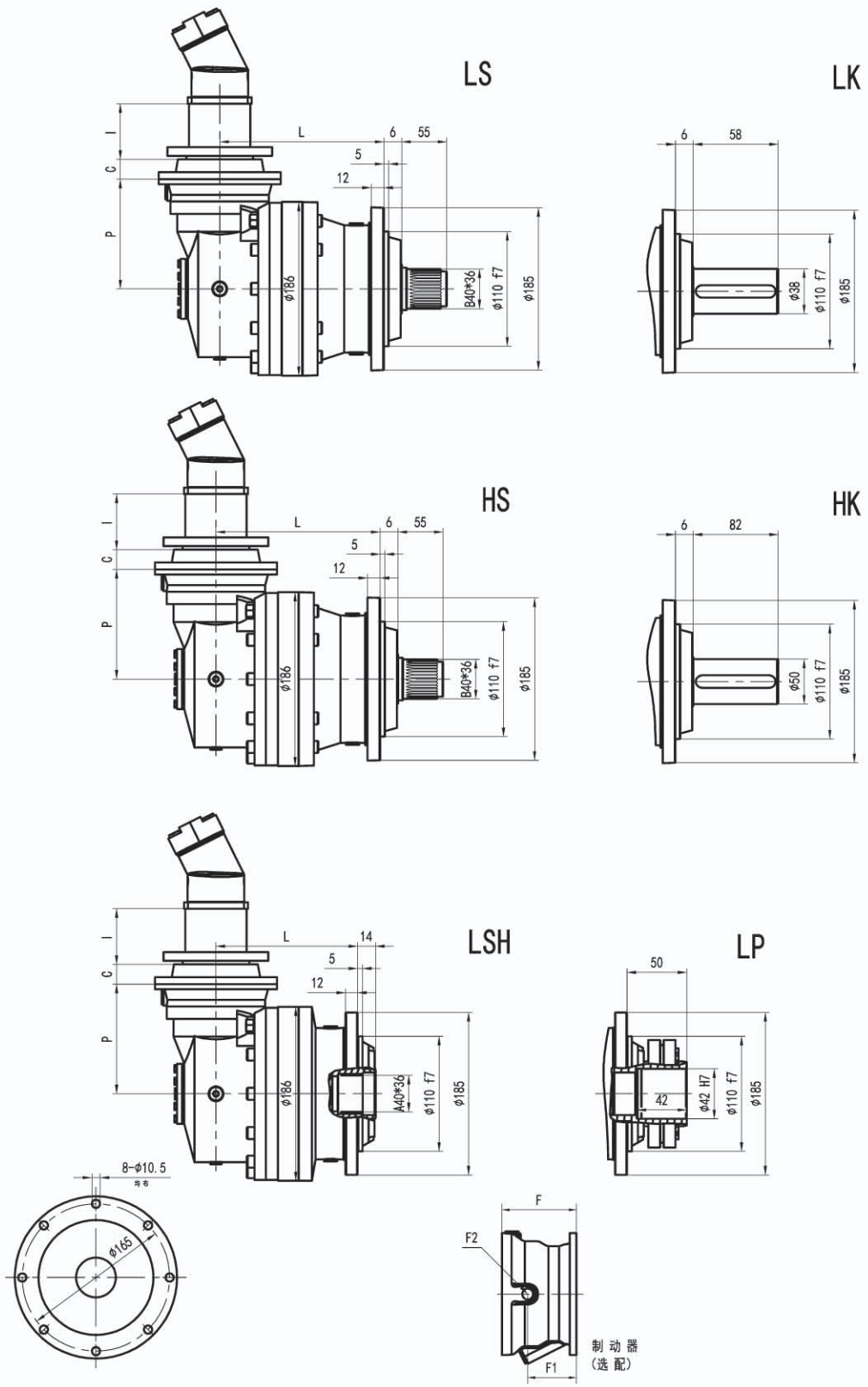
LS
LK
HS
HK
LSH
LP
L
I
C
P
6
55
5
12
14
58
82
50
42
φ186
φ185
φ110 f7
B40*36
φ38
φ50
φ42 H7
A40*36
8-φ10.5
均布
φ165
F
F2
F1
制 动 器
(选 配)

GTN00 R

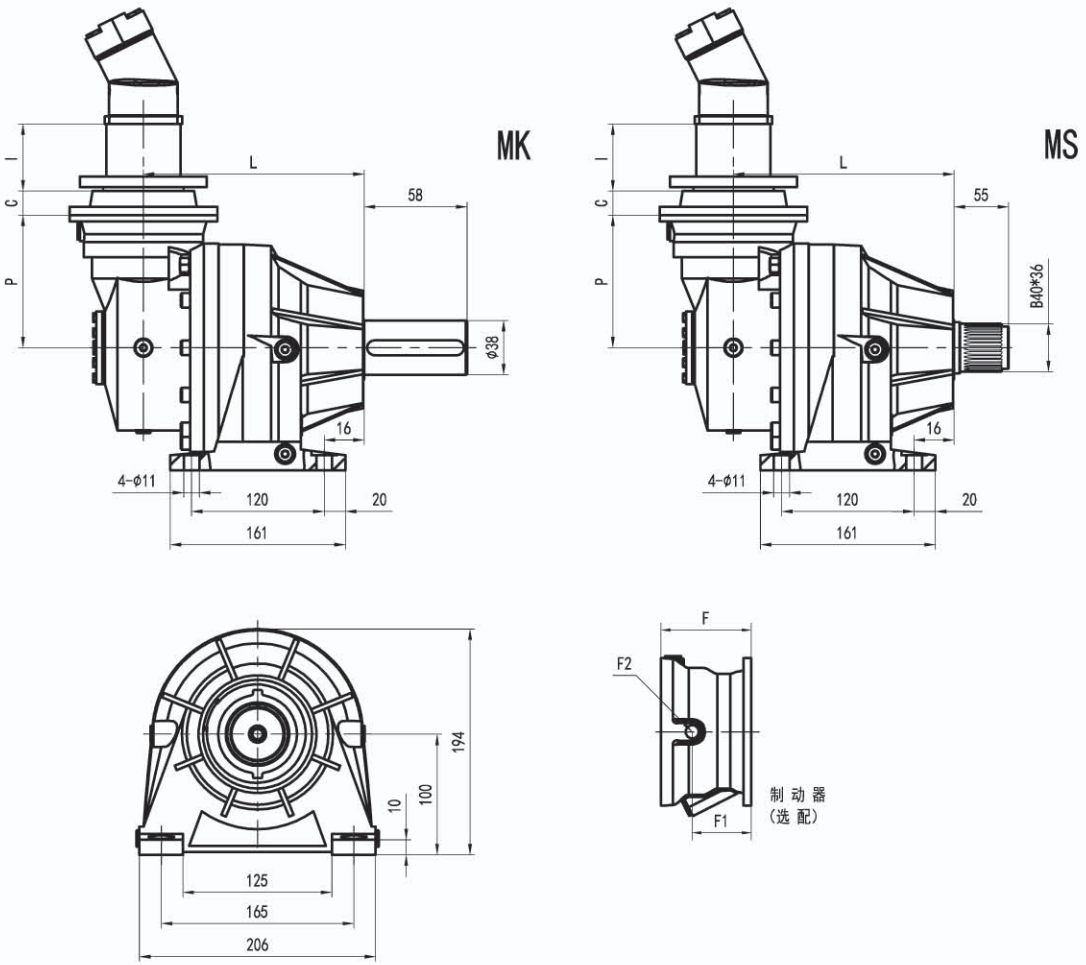

LP输出 LP VERSION	最大输出扭矩 MAX. TRANSMISSIBLE TORQUE	1200 Nm

	L				P	kg				C		I							kg
	LS LK	LSH LP	HS HK	MK MS		LS LK	LSH LP	HS HK	MK MS		输入 Input		F	F1	F2	类型 Type	输入 Input	
GTN00 R2	172	172	207	178	122	32	30	34	37	37	A	联系厂家	105	65	1/4 G	4	A	10
GTN00 R3	225	225	260	231	122	36	34	38	41	37	A		105	65	1/4 G	4	A	10
GTN00 R4	278	278	313	284	122	40	38	42	45	37	A		105	65	1/4 G	4	A	10

GTN00 R

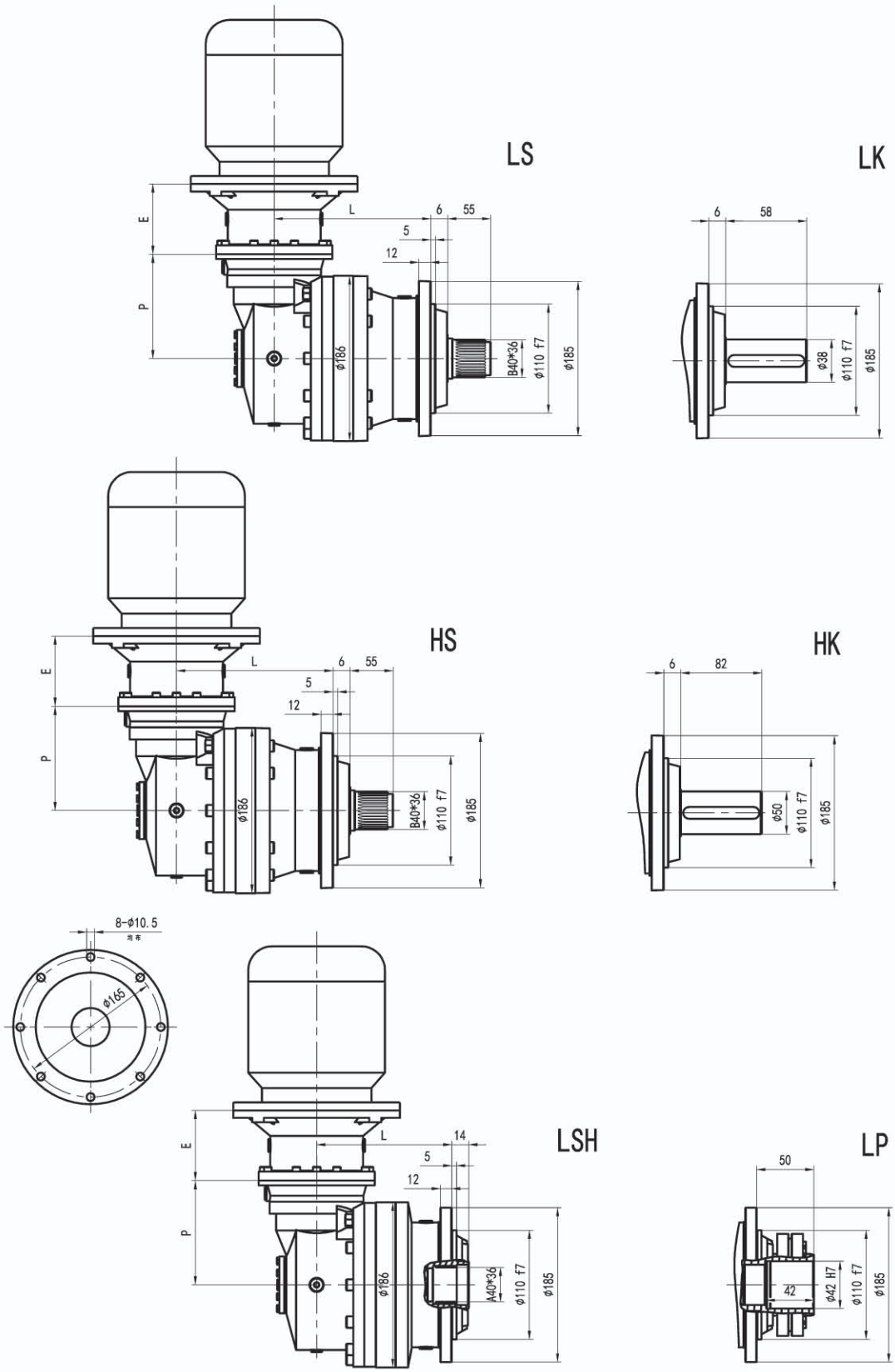
LS
LK
HS
HK
LSH
LP
E
P
L
6
55
5
12
58
82
14
50
42
ϕ186
B40*36
A40*36
ϕ110 f7
ϕ185
ϕ38
ϕ50
ϕ42 H7
8-ϕ10.5
均布
ϕ165

GTN00 R

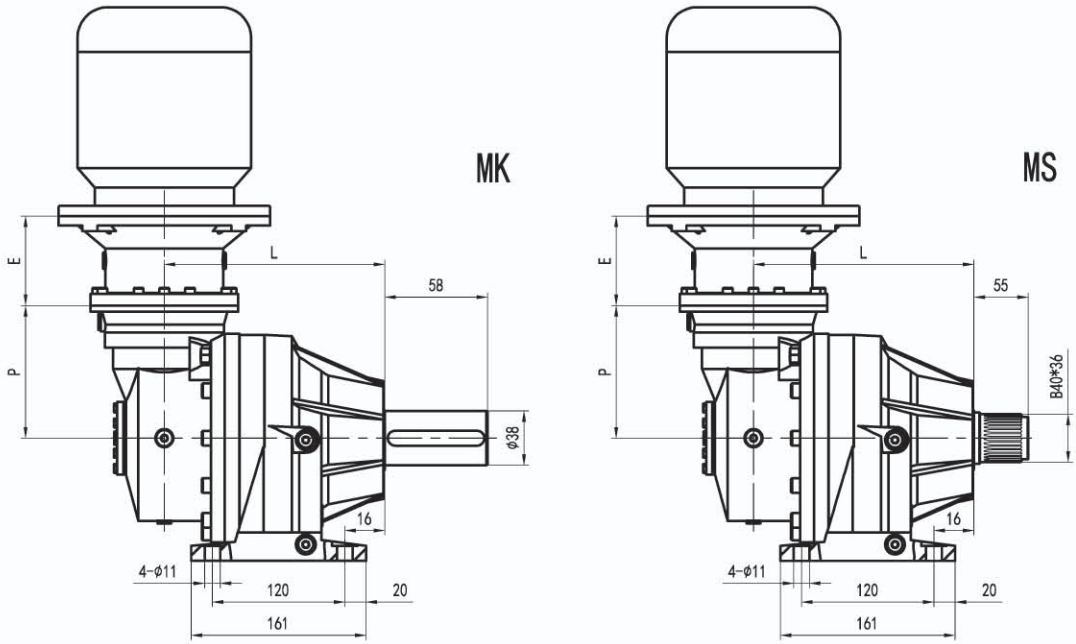

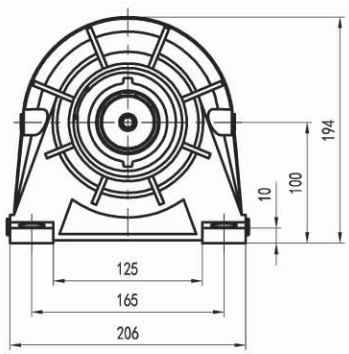

LP输出 LP VERSION	最大输出扭矩 MAX. TRANSMISSIBLE TORQUE	1200 Nm

	L				P	Kg				E					
	LS LK	LSH LP	HS HK	MK MS		LS LK	LSH LP	HS HK	MK MS	IEC 71	IEC 80	IEC 90	IEC 100	IEC 112	IEC 132
GTN00 R2	172	172	207	178	122	32	30	34	37	65	84	84	94	94	114
GTN00 R3	225	225	260	231	122	36	34	38	41	65	84	84	94	94	114
GTN00 R4	278	278	313	284	122	40	38	42	45	65	84	84	94	94	114

GTN00 R

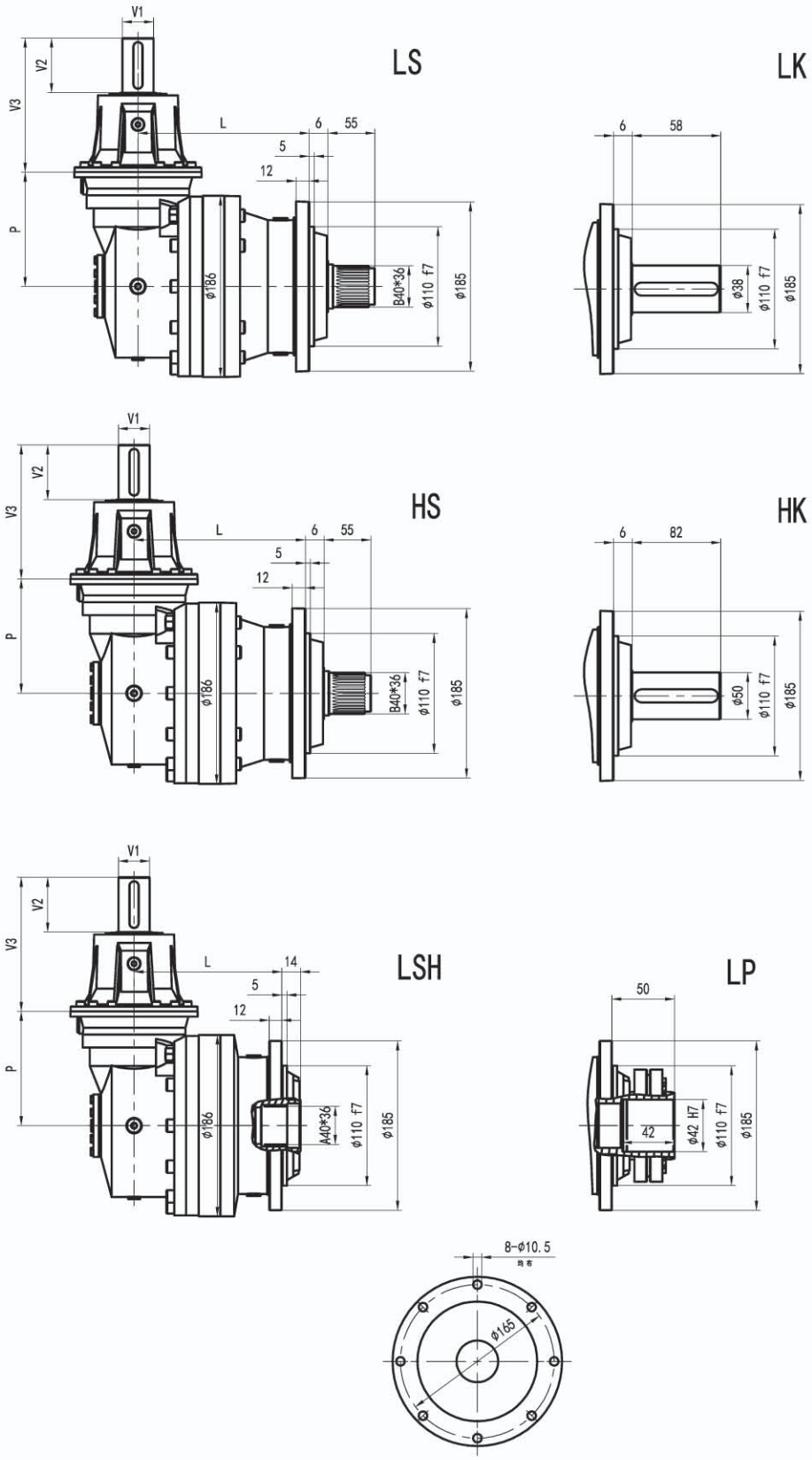
LS
LK
HS
HK
LSH
LP
V1
V2
V3
P
L
6
55
5
12
14
58
82
50
42
ø186
B40*36
A40*36
ø110 f7
ø185
ø38
ø50
ø42 H7
8-ø10.5
均布
ø165

GTN00 R

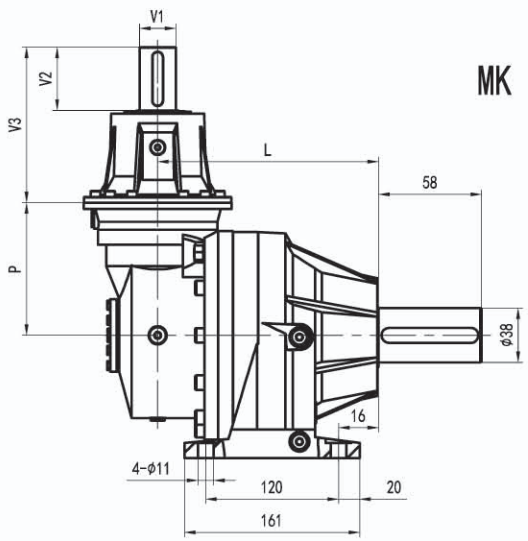

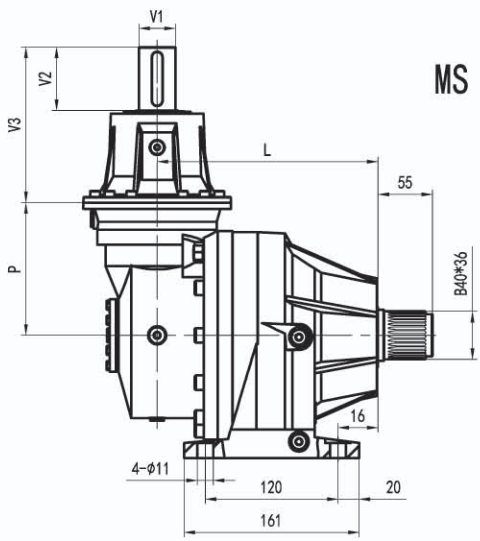

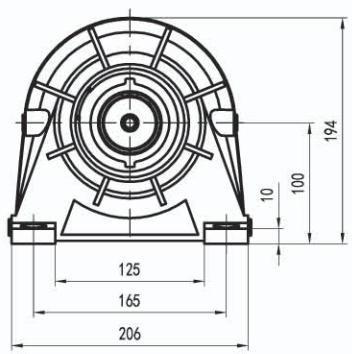

LP输出 LP VERSION	最大输出扭矩 MAX. TRANSMISSIBLE TORQUE	1200 Nm

	L				p	Kg				V1	V2	V3	Kg	V1	V2	V3	Kg
	LS LK	LSH LP	HS HK	MK MS		LS LK	LSH LP	HS HK	MK MS								
GTN00 R2	172	172	207	178	122	32	30	34	37	24	36	137.5	6	38	58	158	7
GTN00 R3	225	225	260	231	122	36	34	38	41	24	36	137.5	6	38	58	158	7
GTN00 R4	278	278	313	284	122	40	38	42	45	24	36	137.5	6	38	58	158	7

GTN00 L - GTN00 R

LK

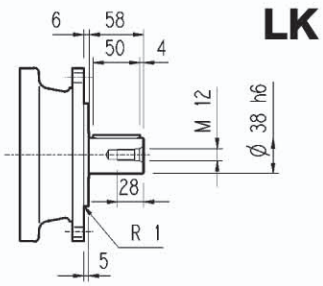

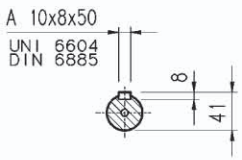

MK

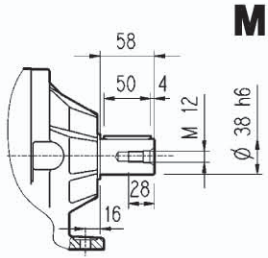

HK

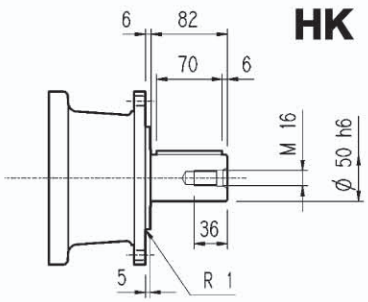

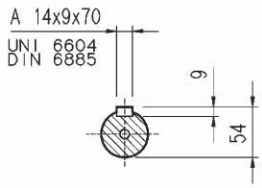

LS-HS

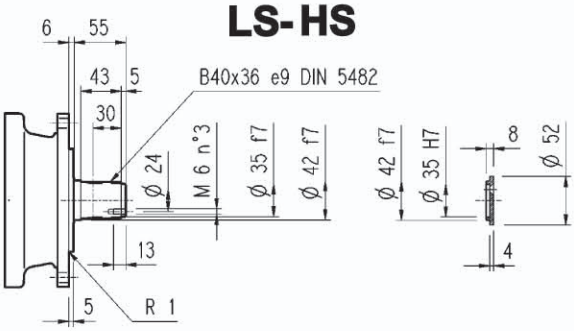

LSH

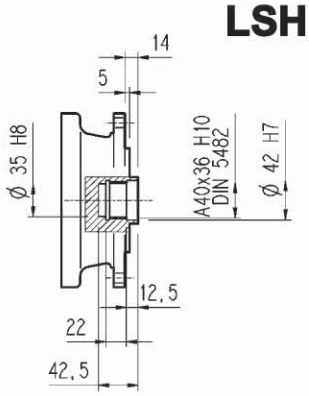

LP

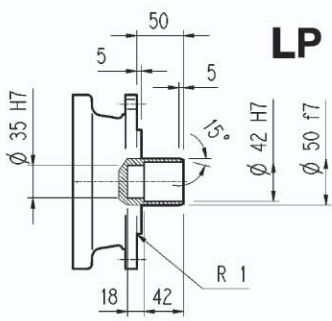

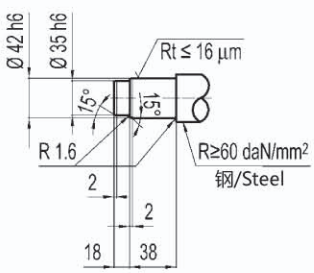

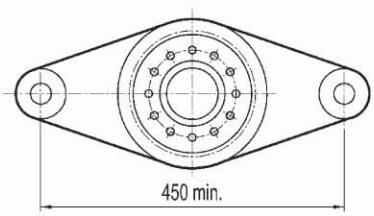

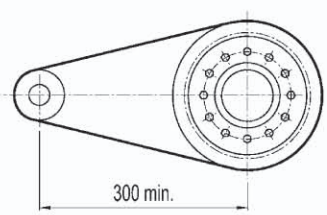

LP输出 LP VERSION	最大输出扭矩 MAX. TRANSMISSIBLE TORQUE	1200 Nm

GTN00 L-GTN00 R

法兰 / Flange

FOA



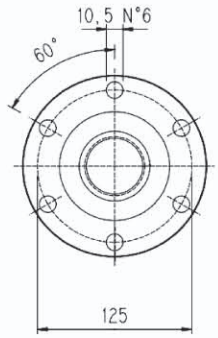

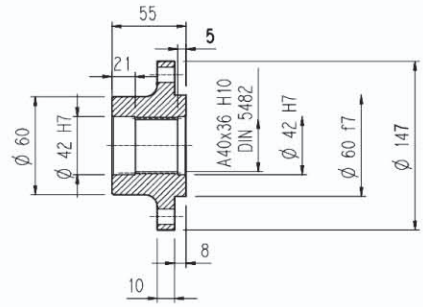

材料：钢 C40
Material : Steel C40

输出齿轮 / Output pinions

PM...



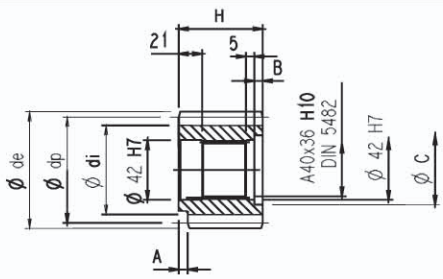

	m	z	x	dp	di	de	H	A	B	C	☆
PM451	4.5	14	0.507	63	56	75.5	55	0	0	0	□
PM501	5	14	0.500	70	62.5	84.8	65	0	10	53	□
PM601	6	12	0.250	72	61	84.8	59	14	4	54	□
PM602	6	14	0.500	84	73	99.6	65	0	10	54	□

☆	材料 / Material
□	39NiCrMo3 调制钢 Steel 39NiCrMo3 hardened and tempered
■	18NiCrMo5 表面渗碳钢 18NiCrMo5 Case hardened

套筒联轴器 / Sleeve couplings

HOS



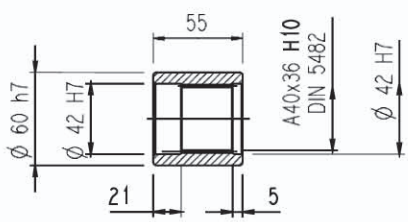

材料 : 16CrNi4
Material : Steel 16CrNi4

花键 / Splined bars

SOF



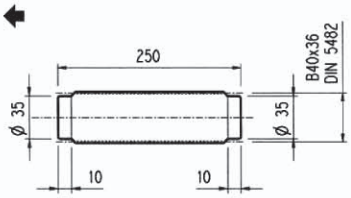

表面硬化钢 18NiCrMo5 UNI 5331 表面硬化必须达到 50-55 HRC
Case hardening steel 18NiCrMo5 UNI 5331
must be case hardened 50-55 HRC

锁紧盘/ Shrink disc

LOP



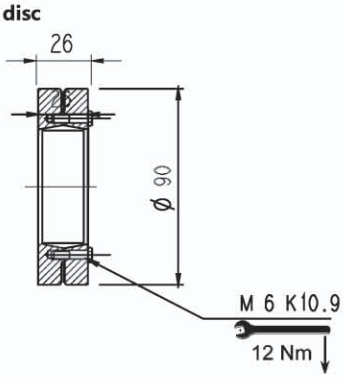

GTN00 L - GTN00 R

输入轴 / Input shaft

S_ _

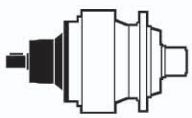

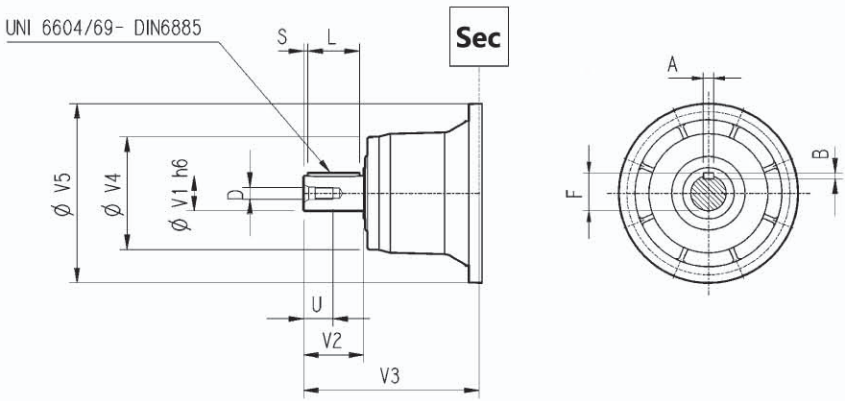

	CODE	V1	V2	V3	V4	V5	A	B	F	L	S	D	U
GTN00 L1	S01A	24	36	137.5	120	186	8	7	27	30	3	M8	19
	S01B	38	58	158	120	186	10	8	41	50	4	M12	28
GTN00 L2	S01A	24	36	137.5	120	186	8	7	27	30	3	M8	19
	S01B	38	58	158	120	186	10	8	41	50	4	M12	28
GTN00 L3	S01A	24	36	137.5	120	186	8	7	27	30	3	M8	19
	S01B	38	58	158	120	186	10	8	41	50	4	M12	28
GTN00 L4	S01A	24	36	137.5	120	186	8	7	27	30	3	M8	19
	S01B	38	58	158	120	186	10	8	41	50	4	M12	28
GTN00 R2-R3-R4	S01A	24	36	137.5	120	186	8	7	27	30	3	M8	19
	S01B	38	58	158	120	186	10	8	41	50	4	M12	28

不带电机的输入法兰尺寸

Input dimension without motor adaptor

S_ _

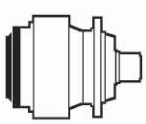

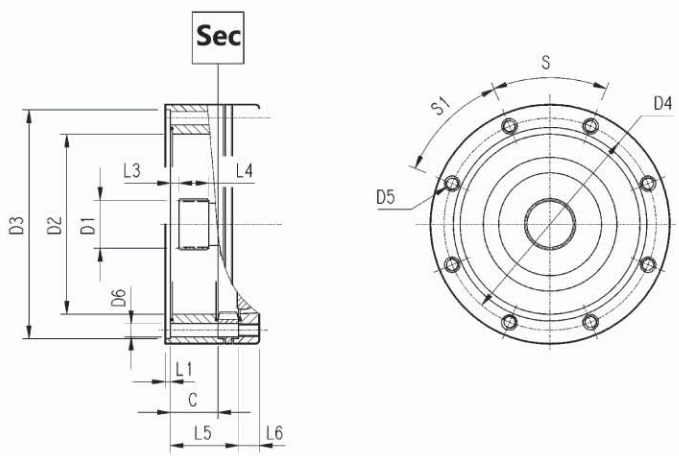

	CODE	C	D1	D2	D3	D4	D5	D6	L1	L2	L3	L4	L5	L6	S	S1	输入 Input
GTN00 L1	S9AA	37	40x36 DIN5482	140	178 H7	165	M10 n°8	11	4	/	9	18	53	18	45°	45°	A
GTN00 L2	S9AA	37	40x36 DIN5482	140	178 H7	165	M10 n°8	11	4	/	9	18	106	18	45°	45°	A
GTN00 L3	S9AA	37	40x36 DIN5482	140	178 H7	165	M10 n°8	11	4	/	9	18	159	18	45°	45°	A
GTN00 L4	S9AA	37	40x36 DIN5482	140	178 H7	165	M10 n°8	11	4	/	9	18	212	18	45°	45°	A
GTN00 R2-R3-R4	S9AA	37	40x36 DIN5482	140	178 H7	165	M10 n°8	11	4	/	9	18	37	18	45°	45°	A

GTN00 L - GTN00 R

输出轴上允许的径向和轴向载荷
$Fh_2 : n_2 . h = 10000$

Permissible radial and axial loads on output shaft with Fh_2
$n_2 \cdot h = 10000$

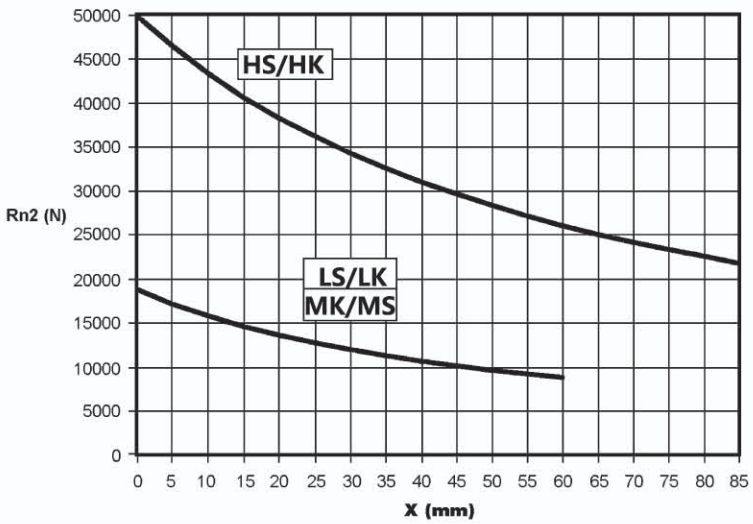

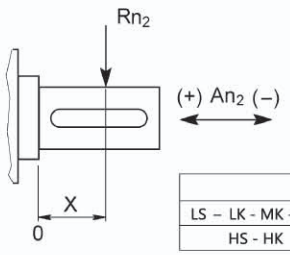

	An_2 (+)	An_2 (-)
LS – LK - MK - MS	20000	15000
HS - HK	40000	40000

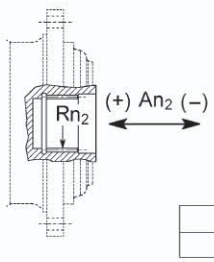

	Rn_2	An_2 (+/-)
LSH	8000	8000

轴上的载荷修正系数 fh_2 Load corrective factor fh_2 on shafts	$Fh_2 = n_2 \cdot h$		10000	25000	50000	100000	500000	1000000
	fh_2	LS-LK-MK-MS-LSH	1	0.74	0.58	0.46	0.27	0.21
		HS - HK	1	0.76	0.61	0.50	0.31	0.25

输入轴上允许的径向和轴向载荷
$Fh_1 n_1 \cdot h = 250000$

Permissible radial loads on inputshaft with $Fh_1 : n_1 \cdot h = 250000$

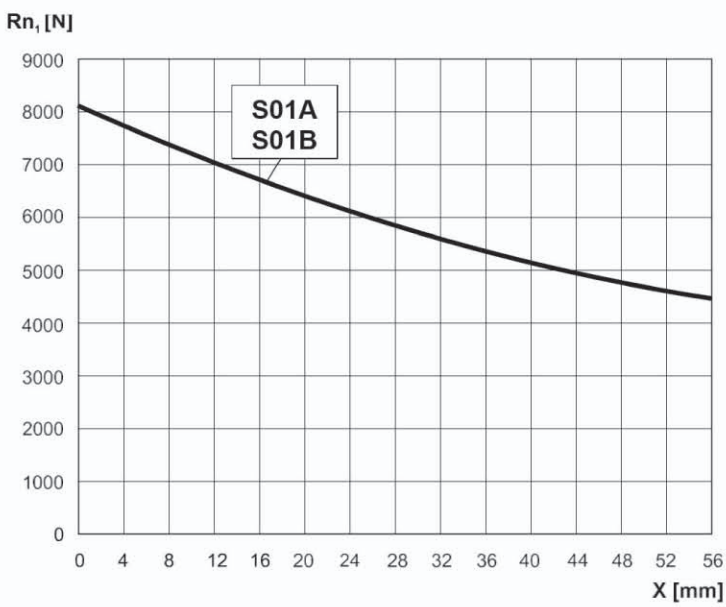

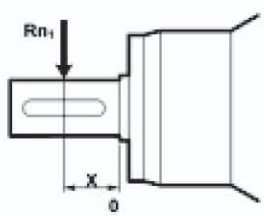

轴上的载荷修正系数 fh_1 Load corrective factor fh_1 on shafts	$Fh_1 = n_1 \cdot h$	250000	500000	1000000	2000000	5000000	10000000
	fh_1	1	0.79	0.63	0.50	0.37	0.29

GTN01 L

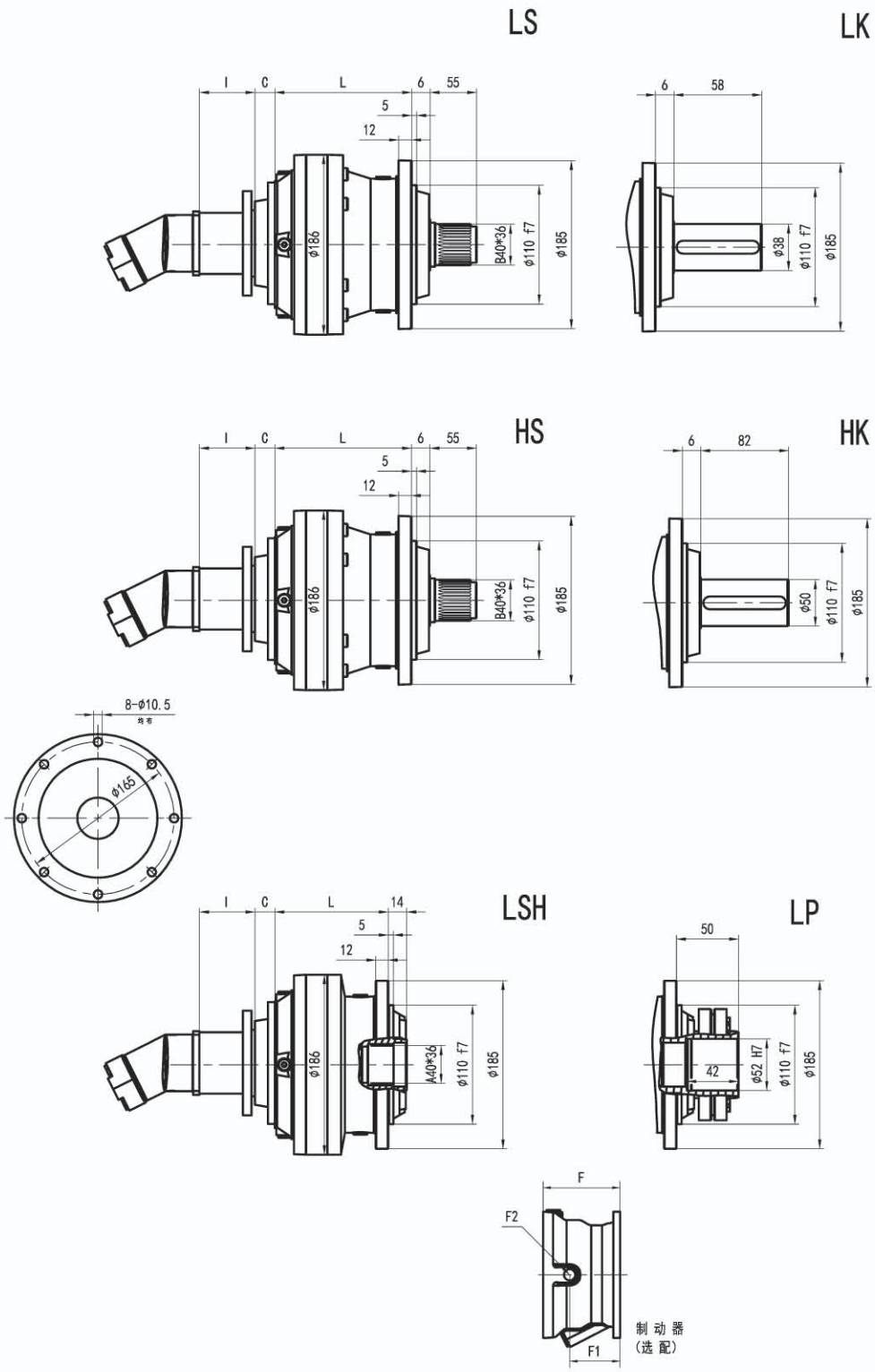
LS
LK
I
C
L
6
55
5
12
58
φ186
B40*36
φ110 f7
φ185
φ38
HS
HK
82
φ50
8-φ10.5
均布
φ165
LSH
LP
14
A40*36
42
φ52 H7
F
F2
F1
制动器
(选配)

GTN01 L

MK

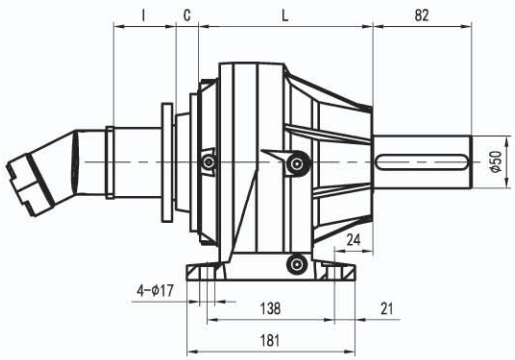

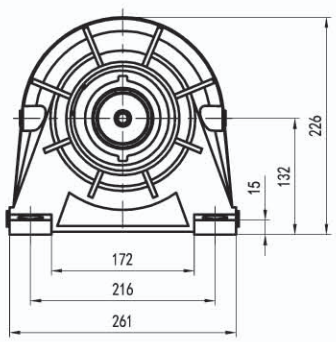

MS

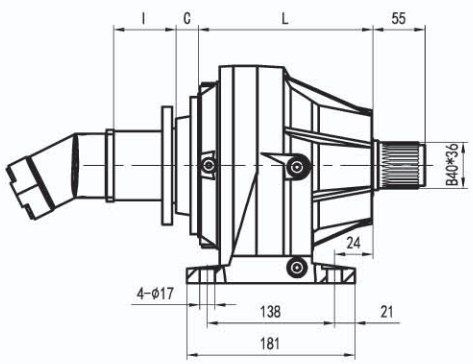

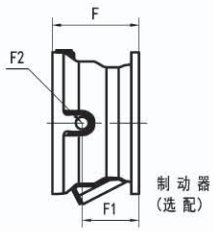

LP输出 LP VERSION	最大输出扭矩 MAX. TRANSMISSIBLE TORQUE	2400 Nm

	L				Kg				C	输入 Input	I	F	F1	F2	类型 Type	输入 Input	Kg
	LS LK	LSH LP	HS HK	MK MS	LS LK	LSH LP	HS HK	MK MS									
GTN01 L1	92	92	127	133	21	19	23	26	37	A	联系厂家	105	65	1/4G	4	A	10
GTN01 L2	145	145	180	186	25	23	27	30	37	A		105	65	1/4G	4	A	10
GTN01 L3	198	198	233	239	29	27	31	34	37	A		105	65	1/4G	4	A	10
GTN01 L4	251	251	286	292	33	31	35	38	37	A		105	65	1/4G	4	A	10

GTN01 L

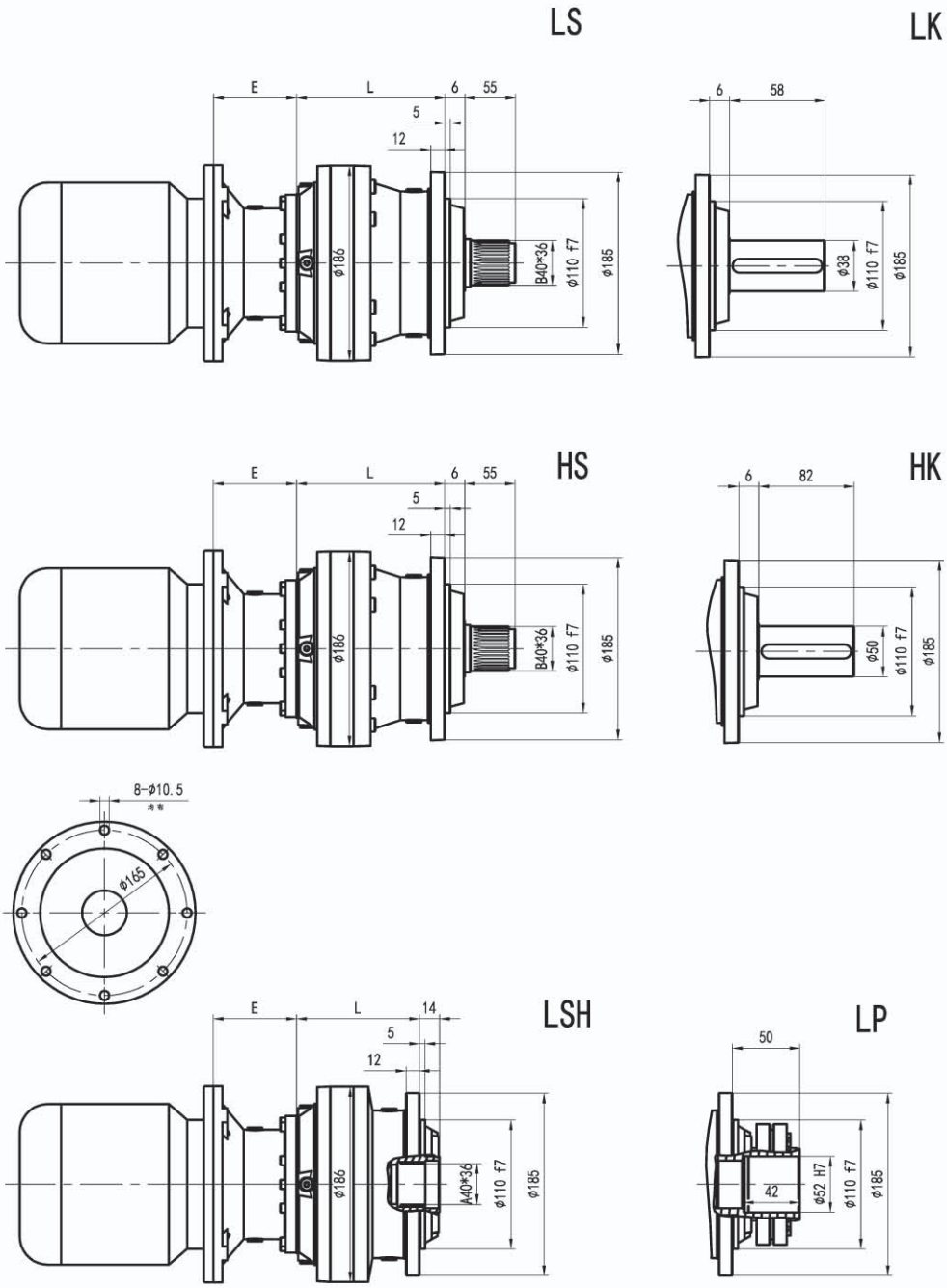
LS
LK
E
L
6
55
5
12
6
58
ø186
B40*36
ø110 f7
ø185
ø38
HS
HK
82
ø50
8-ø10.5
均布
ø165
LSH
LP
14
A40*36
50
42
ø52 H7

GTN01 L

MK

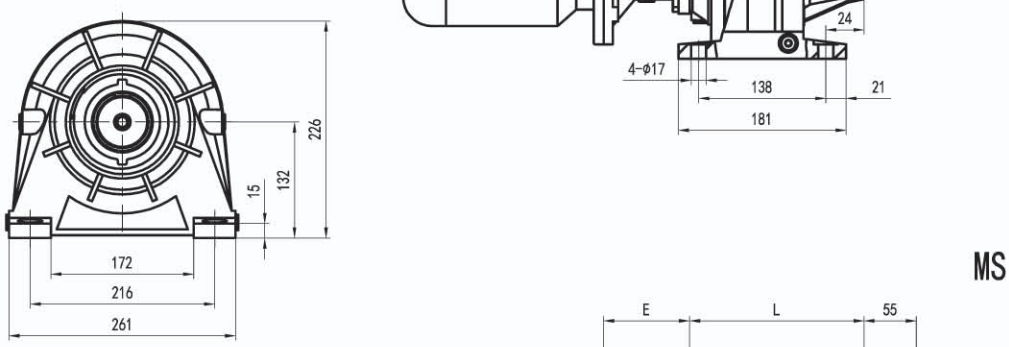

MS

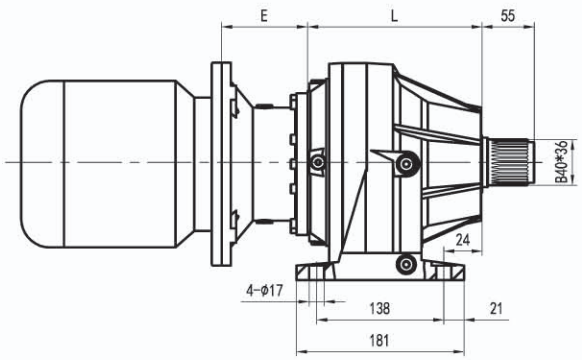

LP输出 LP VERSION	最大输出扭矩 MAX. TRANSMISSIBLE TORQUE	2400 Nm

	L				kg				E						
	LS LK	LSH LP	HS HK	MK MS	LS LK	LSH LP	HS HK	MK MS	IEC 71	IEC 80	IEC 90	IEC 100	IEC 112	IEC 132	IEC 160
GTN01 L1	92	92	127	133	21	19	23	26	65	84	84	94	94	114	114
GTN01 L2	145	145	180	186	25	23	27	30	65	84	84	94	94	114	114
GTN01 L3	198	198	233	239	29	27	31	34	65	84	84	94	94	114	114
GTN01 L4	251	251	286	292	33	31	35	38	65	84	84	94	94	114	114

GTN01 L

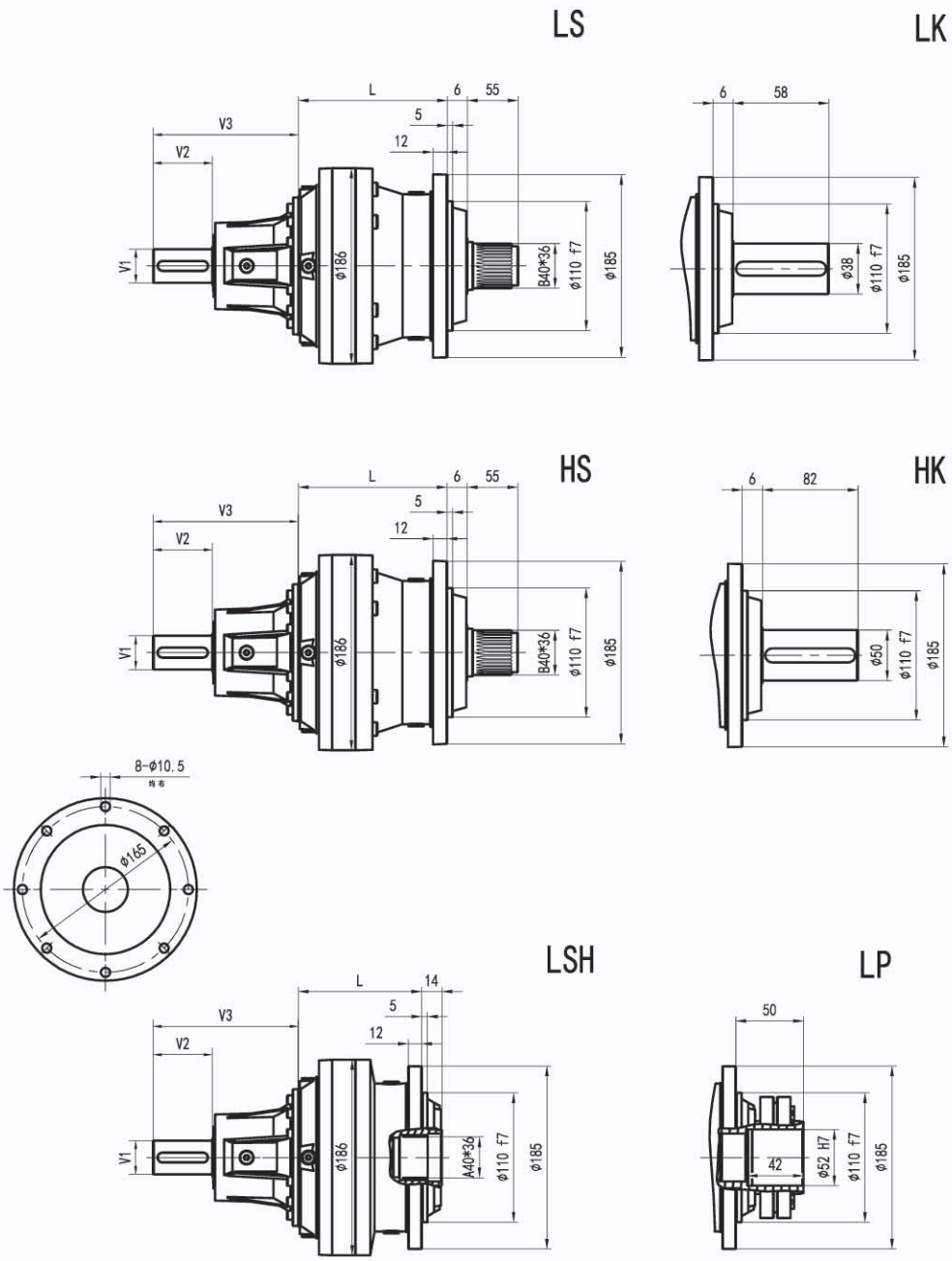
LS
LK
L
6
55
5
12
V3
V2
V1
φ186
B40*36
φ110 f7
φ185
6
58
φ38
HS
HK
82
φ50
8-φ10.5
均布
φ165
LSH
LP
14
A40*36
50
42
φ52 H7

GTN01 L

MK

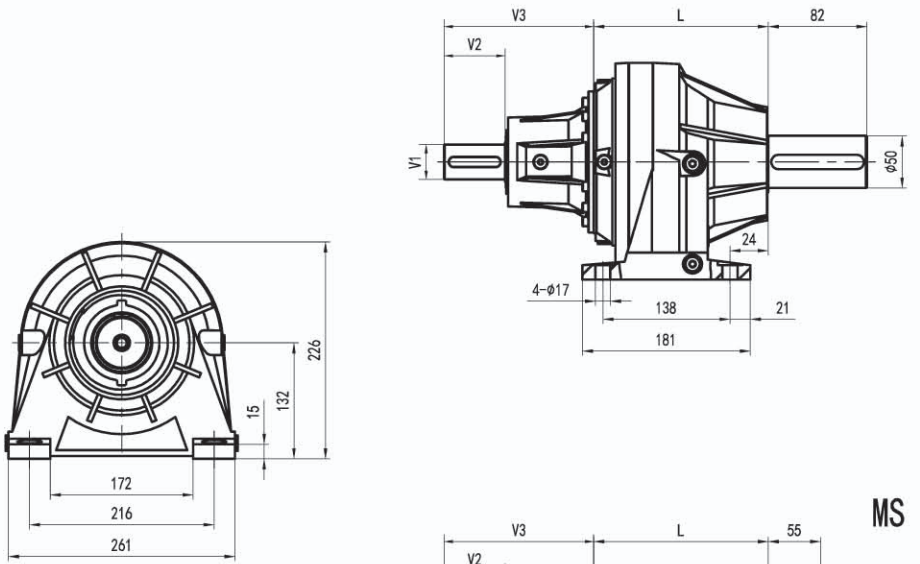

MS

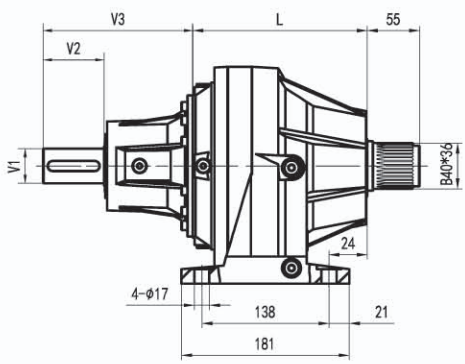

LP输出 LP VERSION	最大输出扭矩 MAX. TRANSMISSIBLE TORQUE	2400 Nm

	L				Kg				V1	V2	V3	Kg	V1	V2	V3	Kg
	LS LK	LSH LP	HS HK	MK MS	LS LK	LSH LP	HS HK	MK MS								
GTN01 L1	92	92	127	133	21	19	23	26	24	36	137.5	6	38	58	158	7
GTN01 L2	145	145	180	186	25	23	27	30	24	36	137.5	6	38	58	158	7
GTN01 L3	198	198	233	239	29	27	31	34	24	36	137.5	6	38	58	158	7
GTN01 L4	251	251	286	292	33	31	35	38	24	36	137.5	6	38	58	158	7

GTN01 R

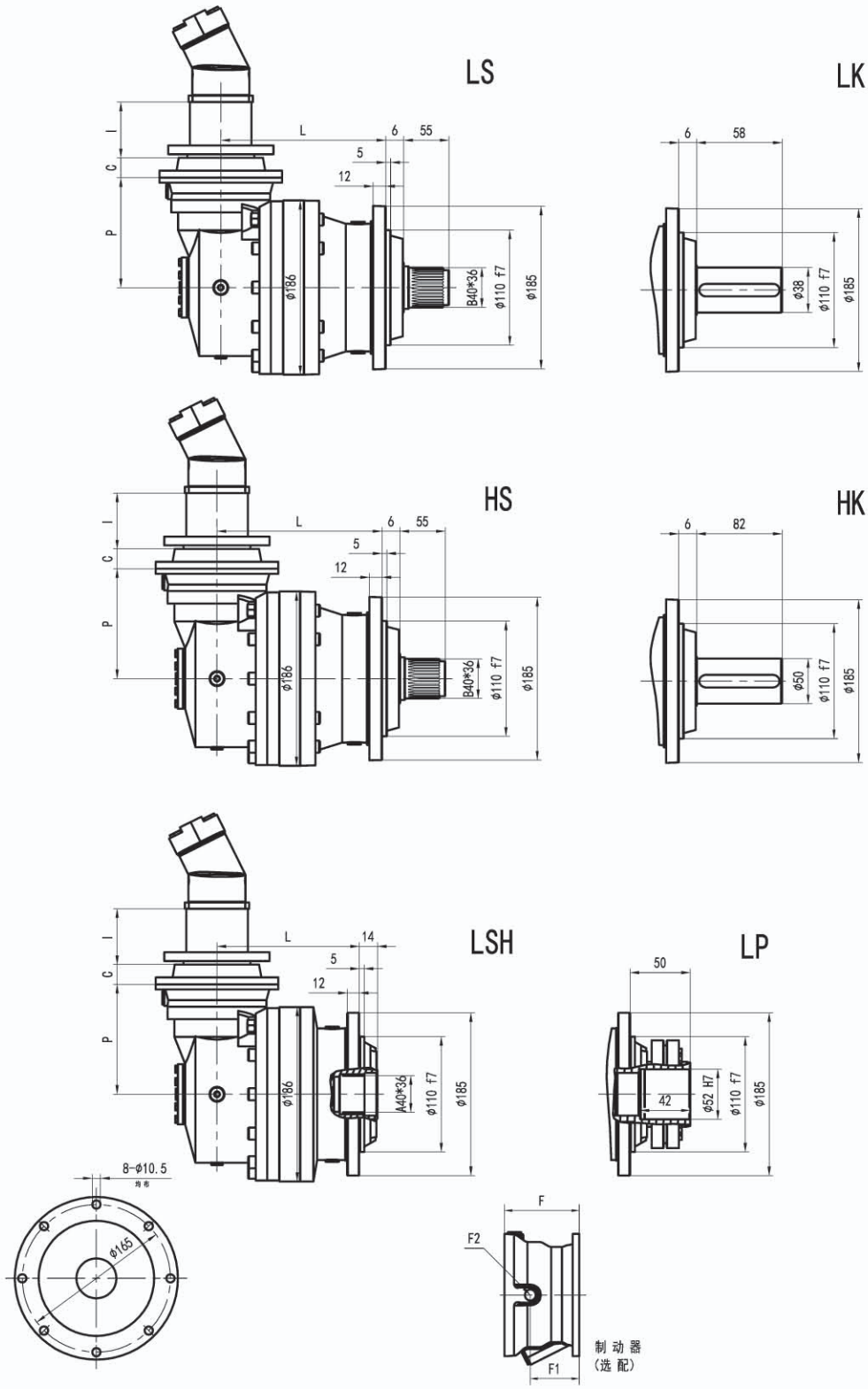
LS
LK
HS
HK
LSH
LP
L
I
C
P
6
55
5
12
14
58
82
50
42
ø186
ø185
ø110 f7
B40*36
A40*36
ø38
ø50
ø52 H7
8-ø10.5
均布
ø165
F
F2
F1
制动器
(选配)

GTN01 R

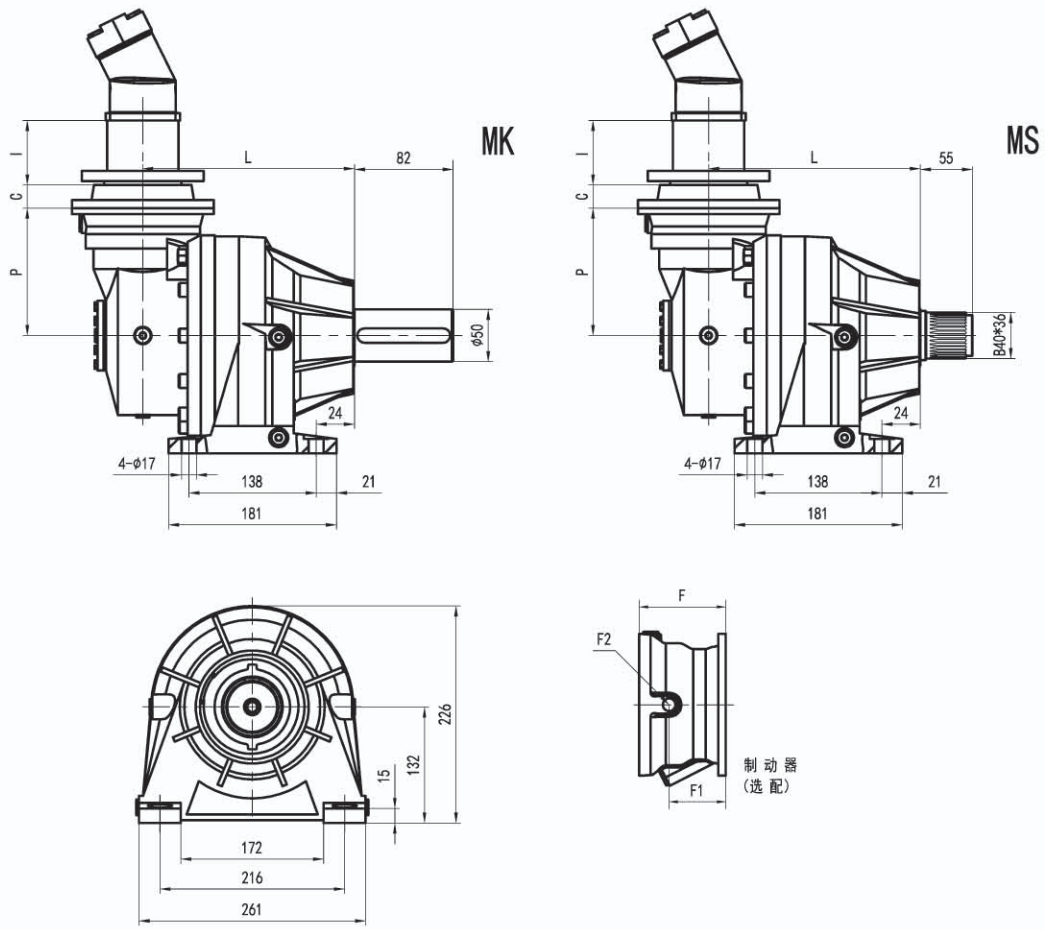

LP输出 LP VERSION	最大输出扭矩 MAX. TRANSMISSIBLE TORQUE	2400 Nm

	L				P	Kg				C	输入 Input	I	F	F1	F2	类型 Type	输入 Input	Kg
	LS LK	LSH LP	HS HK	MK MS		LS LK	LSH LP	HS HK	MK MS									
GTN01 R2	184	184	219	225	122	35	33	37	40	37	A	联系厂家	105	65	1/4 G	4	A	10
GTN01 R3	237	237	272	278	122	39	37	41	44	37	A		105	65	1/4 G	4	A	10
GTN01 R4	290	290	325	331	122	43	41	45	48	37	A		105	65	1/4 G	4	A	10

GTN01 R

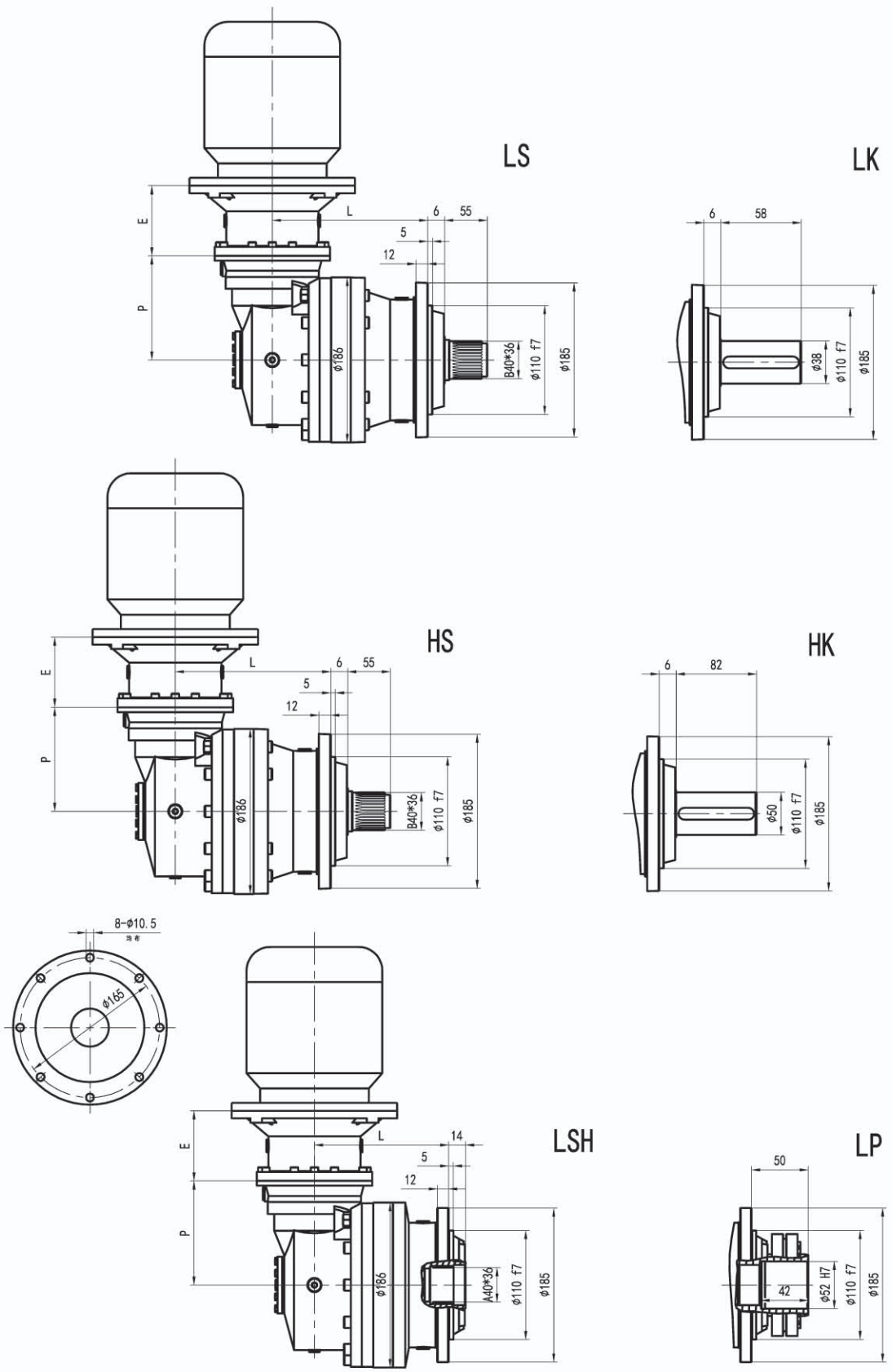
LS
LK
HS
HK
LSH
LP
E
P
L
6
55
5
12
58
82
14
50
ϕ186
B40*36
A40*36
ϕ110 f7
ϕ185
ϕ38
ϕ50
ϕ52 H7
42
8-ϕ10.5
均布
ϕ165

GTN01 R

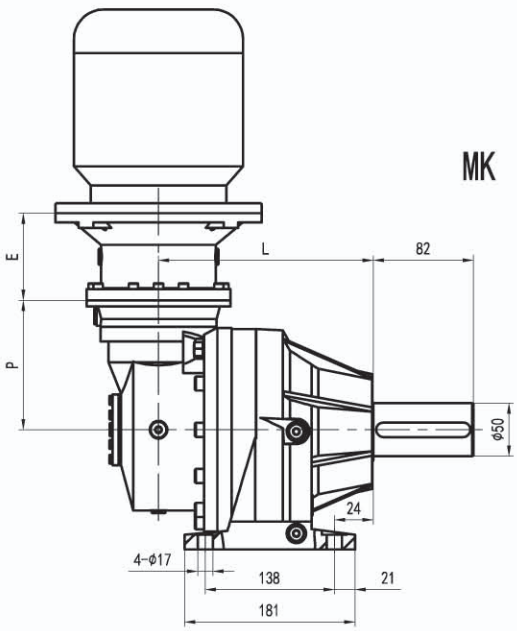

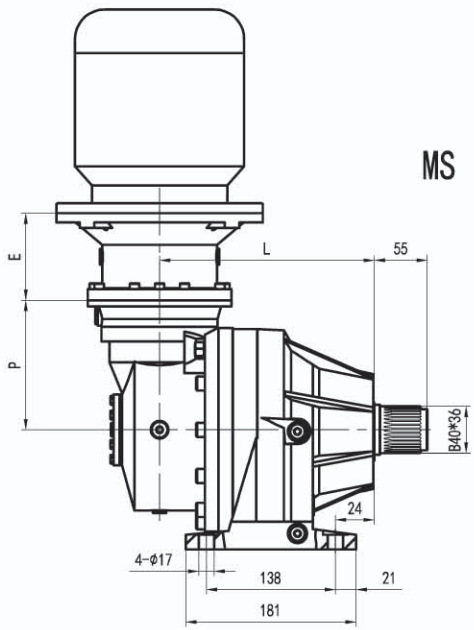

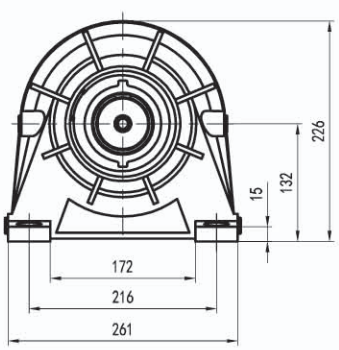

LP输出 LP VERSION	最大输出扭矩 MAX. TRANSMISSIBLE TORQUE	2400 Nm

	L				P	Kg				E					
	LS LK	LSH LP	HS HK	MK MS		LS LK	LSH LP	HS HK	MK MS	IEC 71	IEC 80	IEC 90	IEC 100	IEC 112	IEC 132
GTN01 R2	184	184	219	225	122	35	33	37	40	65	84	84	94	94	114
GTN01 R3	237	237	272	278	122	39	37	41	44	65	84	84	94	94	114
GTN01 R4	290	290	325	331	122	43	41	45	48	65	84	84	94	94	114

GTN01 R

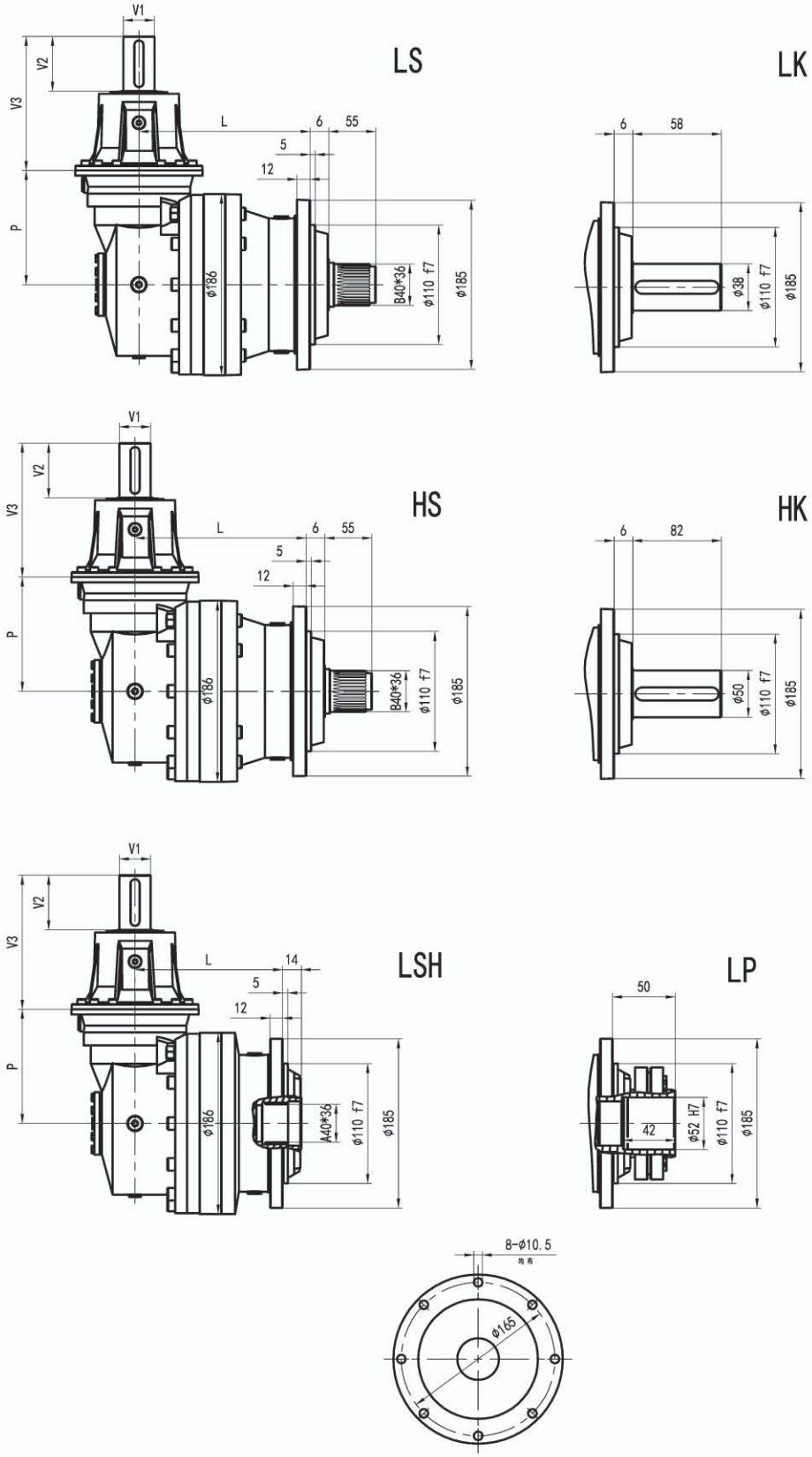
LS
LK
HS
HK
LSH
LP
V1
V2
V3
P
L
6
55
5
12
14
58
82
50
42
φ186
φ185
φ110 f7
B40*36
A40*36
φ38
φ50
φ52 H7
8-φ10.5
均布
φ165

GTN01 R

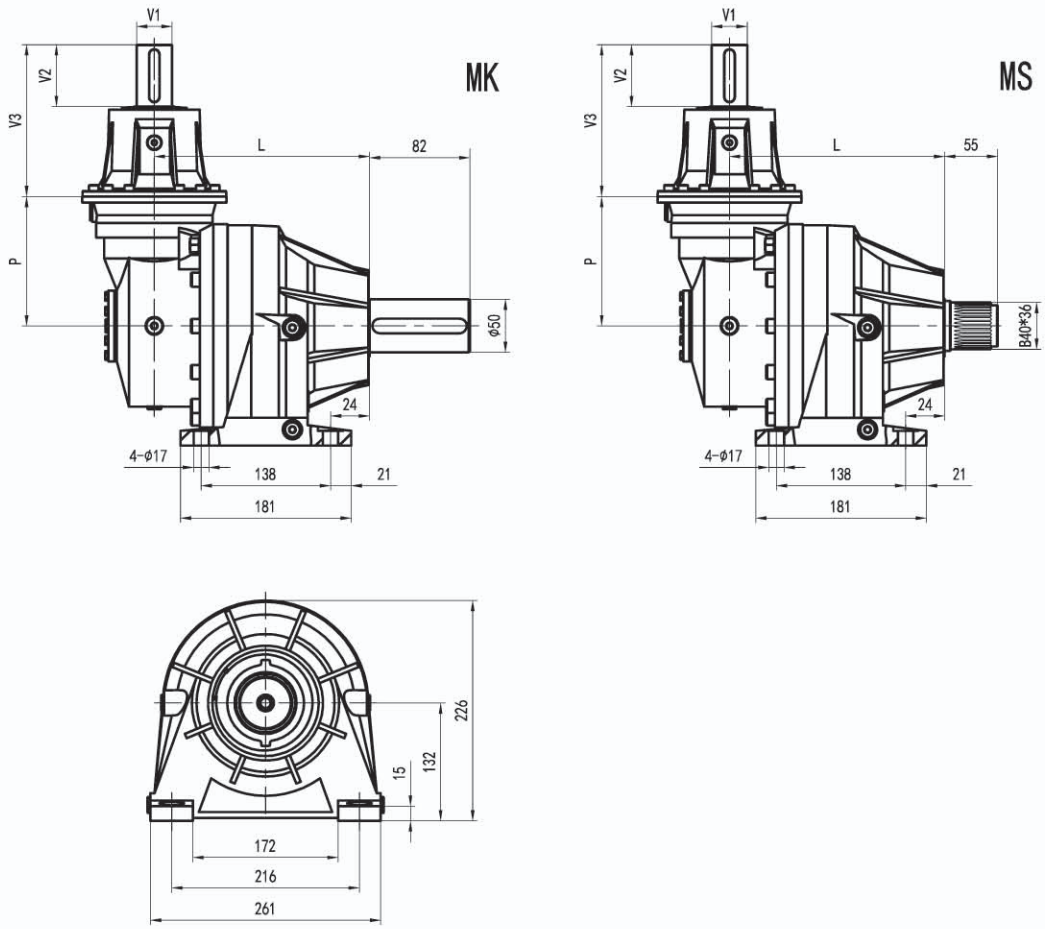

LP输出 LP VERSION	最大输出扭矩 MAX. TRANSMISSIBLE TORQUE	2400 Nm

	L				p	Kg				V1	V2	V3	Kg	V1	V2	V3	Kg
	LS LK	LSH LP	HS HK	MK MS		LS LK	LSH LP	HS HK	MK MS								
GTN01 R2	184	184	219	225	122	35	33	37	40	24	36	137.5	6	38	58	158	7
GTN01 R3	237	237	272	278	122	39	37	41	44	24	36	137.5	6	38	58	158	7
GTN01 R4	290	290	325	331	122	43	41	45	48	24	36	137.5	6	38	58	158	7

GTN01 L - GTN01 R

LK

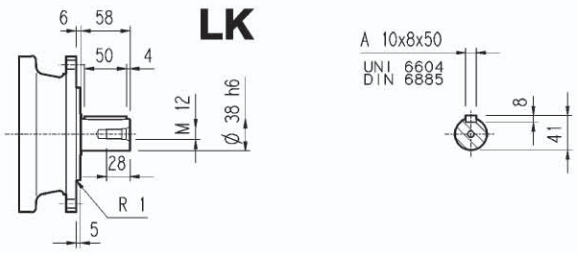

HK

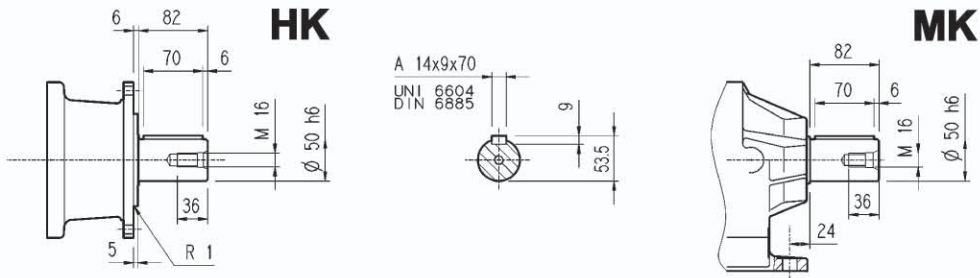

MK

LS-HS

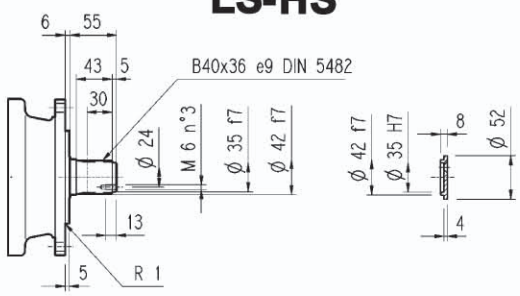

LSH

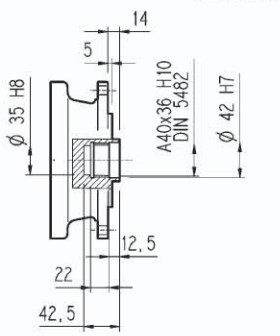

LP

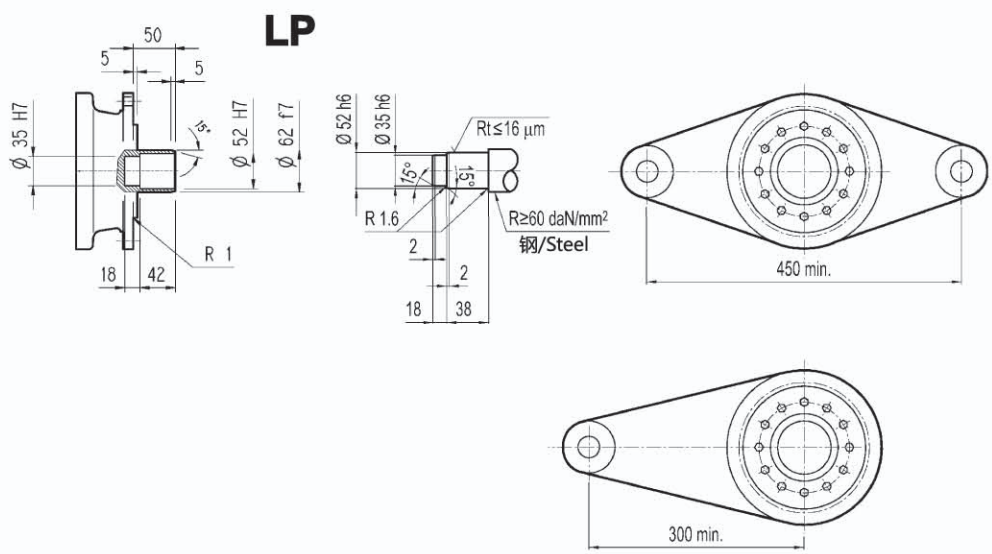

LP输出 LP VERSION	最大输出扭矩 MAX. TRANSMISSIBLE TORQUE	2400 Nm

法兰/ Flange

GTN01 L - GTN01 R
FOA



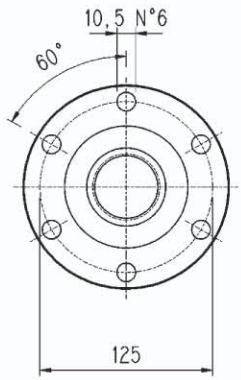

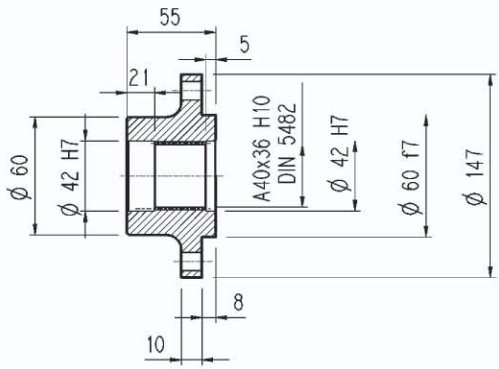

材料 : 钢C40
Material : Steel C40

输出齿轮 / Output pinions



PM...

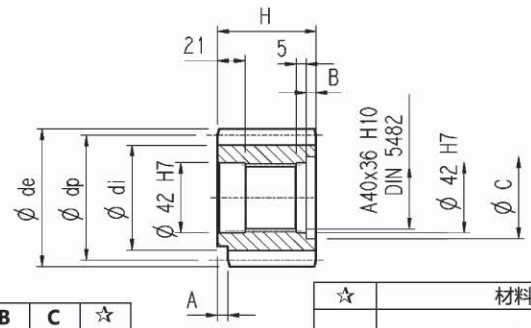

	m	z	x	dp	di	de	H	A	B	C	☆
PM451	4.5	14	0.507	63	56	75.5	55	0	0	0	□
PM501	5	14	0.500	70	62.5	84.8	65	0	10	53	□
PM601	6	12	0.250	72	61	84.8	59	14	4	54	□
PM602	6	14	0.500	84	73	99.6	65	0	10	54	□

☆	材料 / Material
□	39NiCrMo3 调制钢 Steel 39NiCrMo3 hardened and tempered
■	18NiCrMo5 表面渗碳钢 18NiCrMo5 Case hardened

套筒联轴器/ Sleeve couplings



HOS

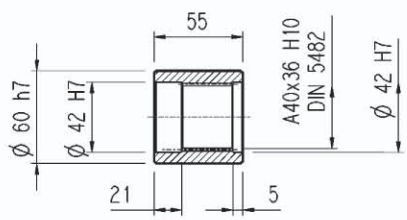

材料 : 16CrNi4
Material : Steel 16CrNi4

花键/ Splined bars



SOF

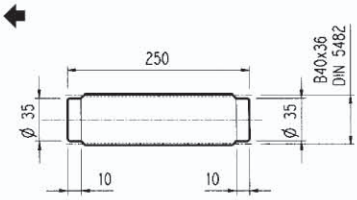

表面硬化钢18NiCrMo5必须达到50-55 HRC
Case hardening steel 18NiCrMo5 UNI 5331
must be case hardened 50-55 HRC

锁紧盘/ Shrink disc



LOP

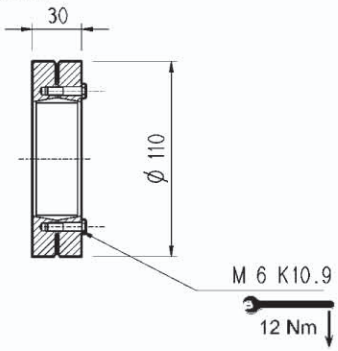

GTN01 L - GTN01 R

输入轴/ Input shaft

S_ _

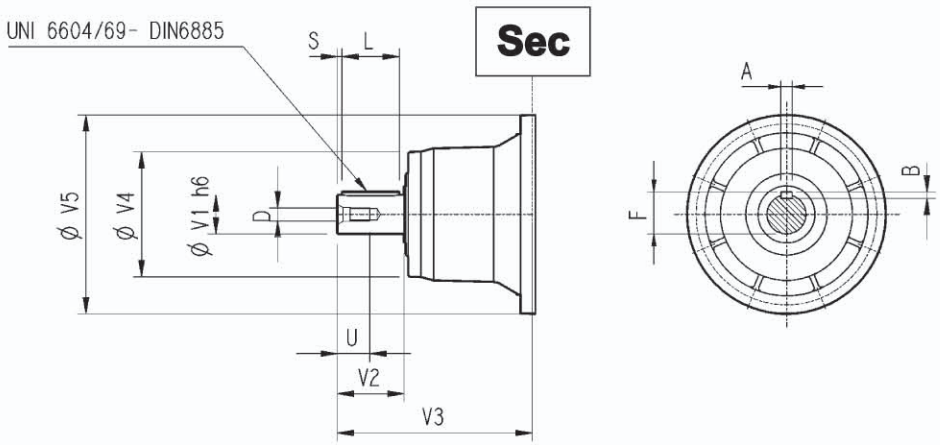

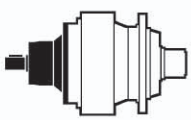

	CODE	V1	V2	V3	V4	V5	A	B	F	L	S	D	U
GTN01 L1	S01A	24	36	137.5	120	186	8	7	27	30	3	M8	19
	S01B	38	58	158	120	186	10	8	41	50	4	M12	28
GTN01 L2	S01A	24	36	137.5	120	186	8	7	27	30	3	M8	19
	S01B	38	58	158	120	186	10	8	41	50	4	M12	28
GTN01 L3	S01A	24	36	137.5	120	186	8	7	27	30	3	M8	19
	S01B	38	58	158	120	186	10	8	41	50	4	M12	28
GTN01 L4	S01A	24	36	137.5	120	186	8	7	27	30	3	M8	19
	S01B	38	58	158	120	186	10	8	41	50	4	M12	28
GTN01 R2-R3-R4	S01A	24	36	137.5	120	186	8	7	27	30	3	M8	19
	S01B	38	58	158	120	186	10	8	41	50	4	M12	28

不带电机的输入法兰尺寸

Input dimension without motor adaptor

S_ _

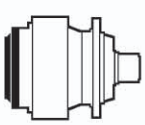

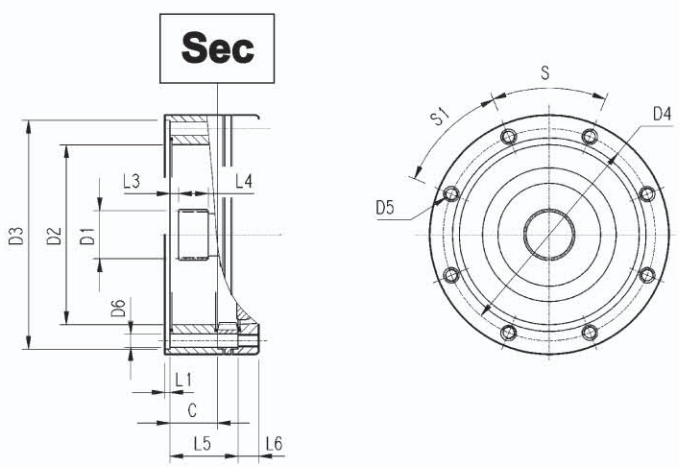

	CODE	C	D1	D2	D3	D4	D5	D6	L1	L2	L3	L4	L5	L6	S	S1	输入 Input
GTN01 L1	S9AA	37	40x36 DIN5482	140	178 H7	165	M10 n°8	11	4	/	9	18	65	18	45°	45°	A
GTN01 L2	S9AA	37	40x36 DIN5482	140	178 H7	165	M10 n°8	11	4	/	9	18	118	18	45°	45°	A
GTN01 L3	S9AA	37	40x36 DIN5482	140	178 H7	165	M10 n°8	11	4	/	9	18	171	18	45°	45°	A
GTN01 L4	S9AA	37	40x36 DIN5482	140	178 H7	165	M10 n°8	11	4	/	9	18	224	18	45°	45°	A
GTN01 R2-R3-R4	S9AA	37	40x36 DIN5482	140	178 H7	165	M10 n°8	11	4	/	9	18	37	18	45°	45°	A

GTN01 L - GTN01 R

输出轴上允许的径向和轴向载荷 $Fh_2 : n_2 \cdot h = 10000$

Permissible radial and axial loadson output shaft with Fh_2 $n_2 \cdot h = 10000$

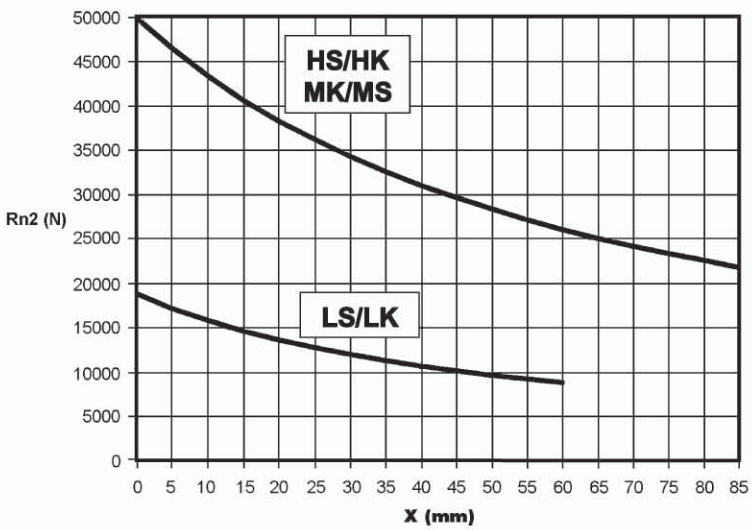

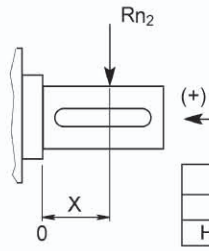

	An2 (+)	An2 (-)
LS-LK	20000	15000
HS-HK-MK-MS	40000	40000

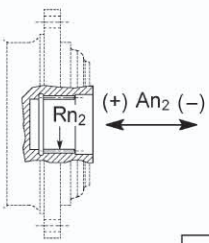

	Rn2	An2 (+/-)
LSH	8000	8000

轴上允许的径向和轴向载荷 fh_2 Load corrective factor fh_2 on shafts	$Fh_2 = n_2 \cdot h$		10000	25000	50000	100000	500000	1000000
	fh_2	LS - LK - LSH	1	0.74	0.58	0.46	0.27	0.21
		HS - HK - MK - MS	1	0.76	0.61	0.50	0.31	0.25

输入轴上允许的径向和轴向载荷 $n_1 \cdot h = 250000$

Permissible radial loads on inputshaft with $Fh_1 : n_1 \cdot h = 250000$

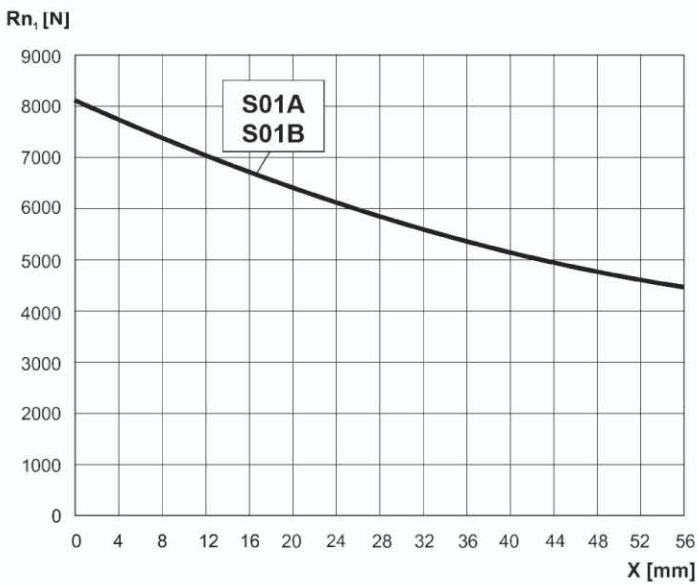

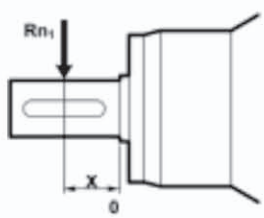

轴上的载荷修正系数 fh_1 Load corrective factor fh_1 on shafts	$Fh_1 = n_1 \cdot h$	250000	500000	1000000	2000000	5000000	10000000
	fh_1	1	0.79	0.63	0.50	0.37	0.29

GTN03 L

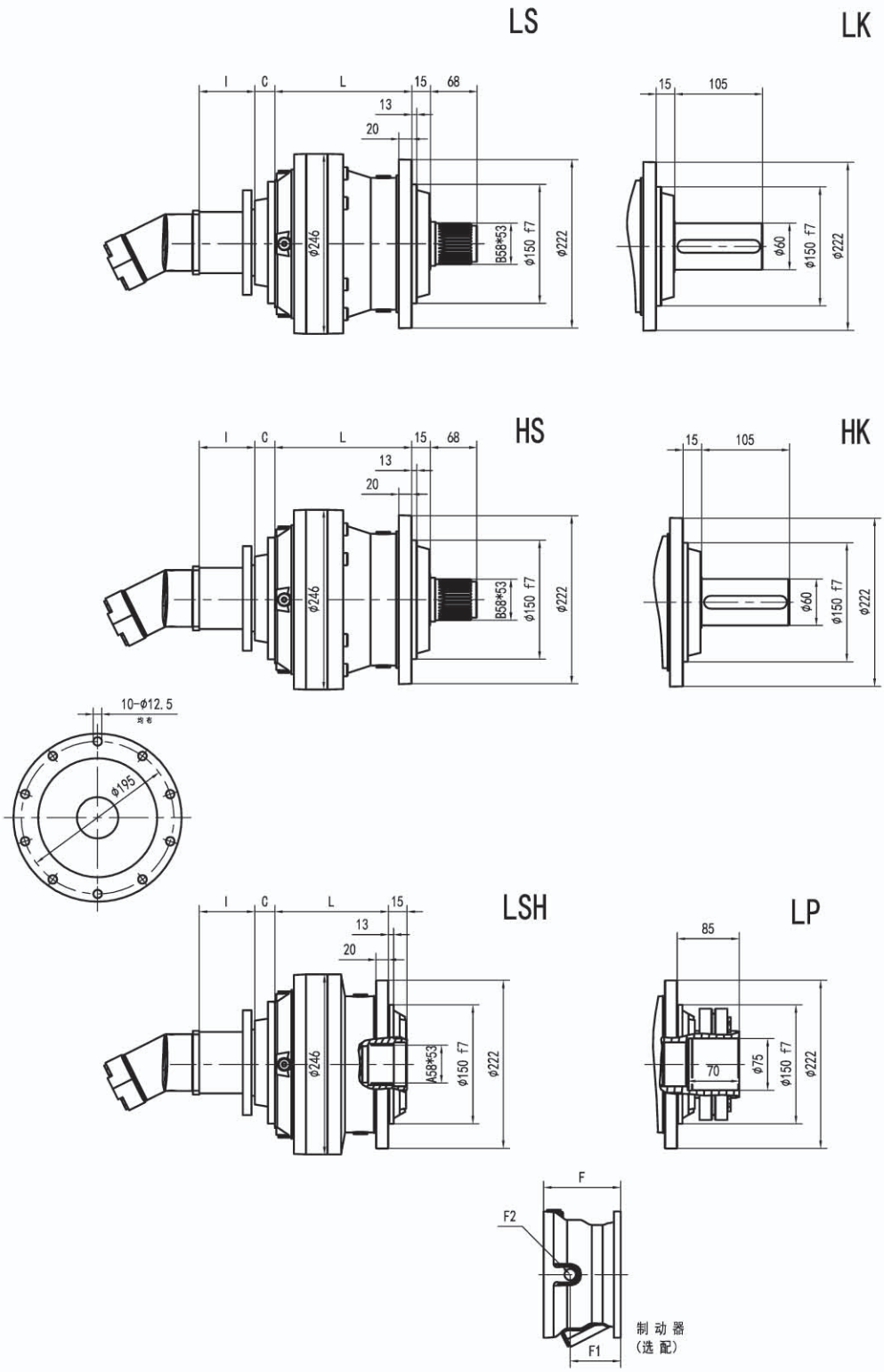
LS
LK
HS
HK
LSH
LP
l
C
L
15
68
13
20
105
ϕ246
B58*53
A58*53
ϕ150 f7
ϕ222
ϕ60
ϕ75
10-ϕ12.5
均布
ϕ195
85
70
F
F2
F1
制 动 器
(选 配)

GTN03 L

MK

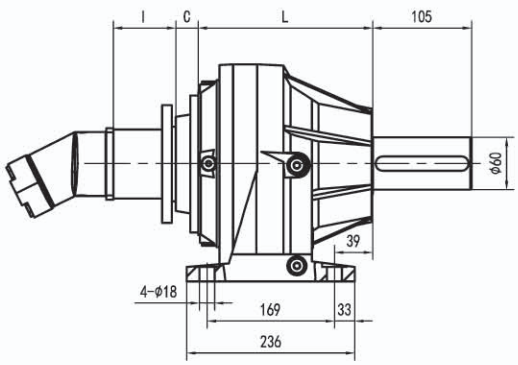

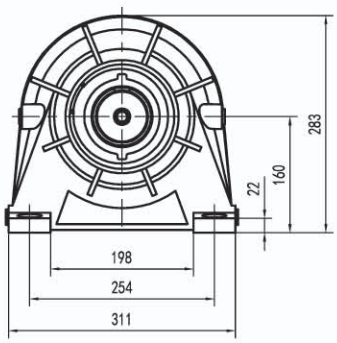

MS

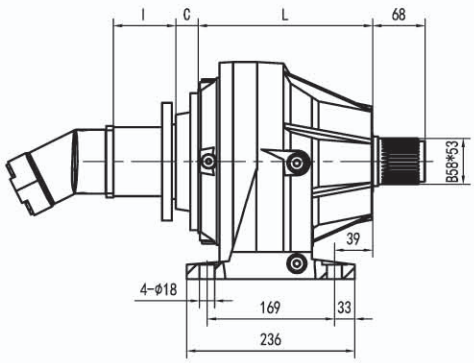

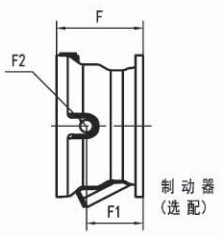

LP输出 LP VERSION	最大输出扭矩 MAX. TRANSMISSIBLE TORQUE	3500 Nm

	L				Kg				C	输入 Input	I	F	F1	F2	类型 Type	输入 Input	Kg
	LS LK	LSH LP	HS HK	MK MS	LS LK	LSH LP	HS HK	MK MS									
GTN03 L1	125	125	150	165	31	31	35	40	37	A	联系厂家	145	95	1/4 G	5	A	16
GTN03 L2	178	178	203	218	35	35	39	44	37	A		105	65	1/4 G	4	A	10
GTN03 L3	231	231	256	271	39	39	43	48	37	A		105	65	1/4 G	4	A	10
GTN03 L4	284	284	309	324	43	43	47	52	37	A		105	65	1/4 G	4	A	10

GTN03 L

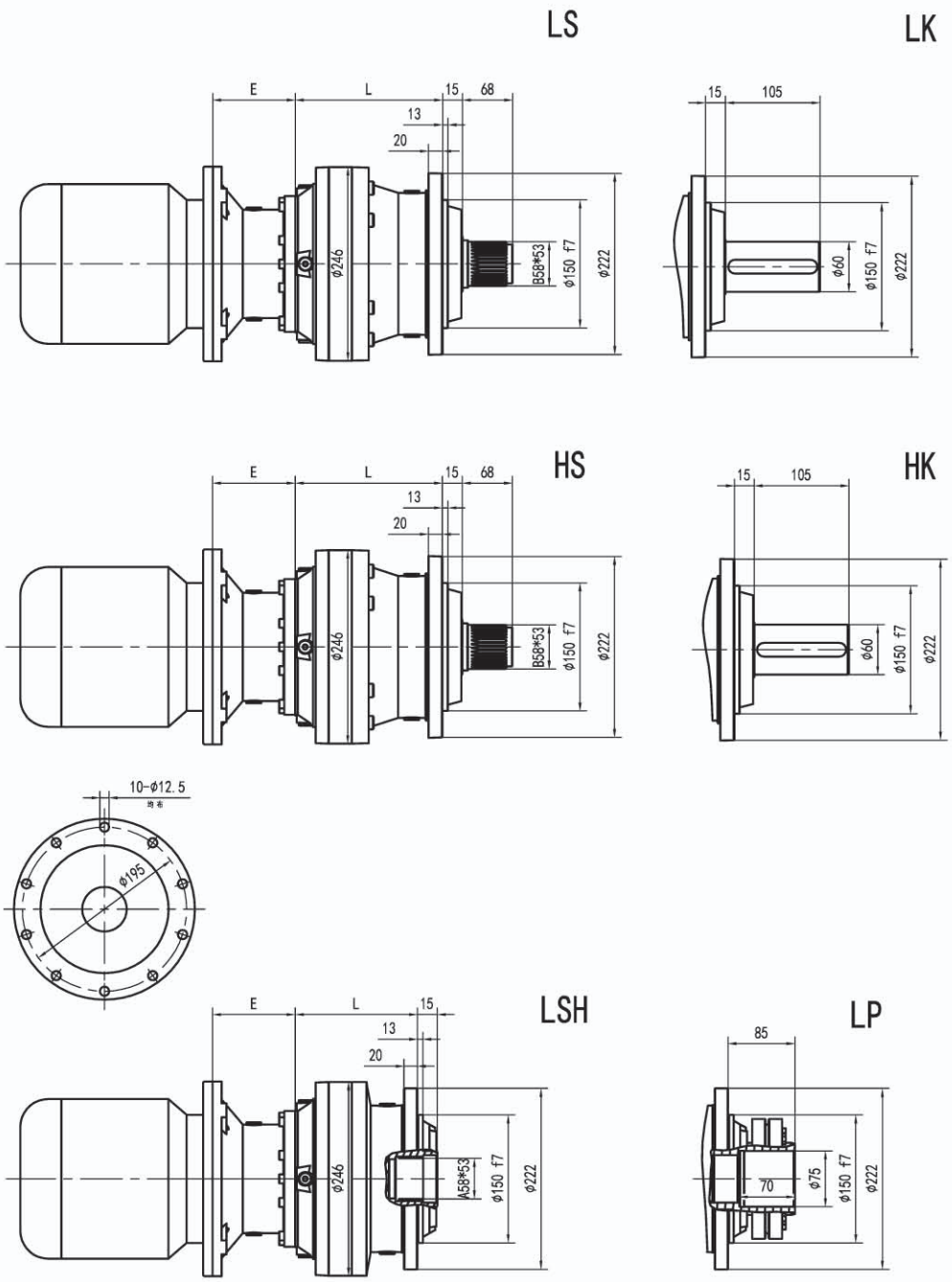
LS
LK
E
L
15
68
13
20
B58*53
ϕ246
ϕ150 f7
ϕ222
105
ϕ60
HS
HK
10-ϕ12.5
均布
ϕ195
LSH
LP
A58*53
85
70
ϕ75

GTN03 L

MK

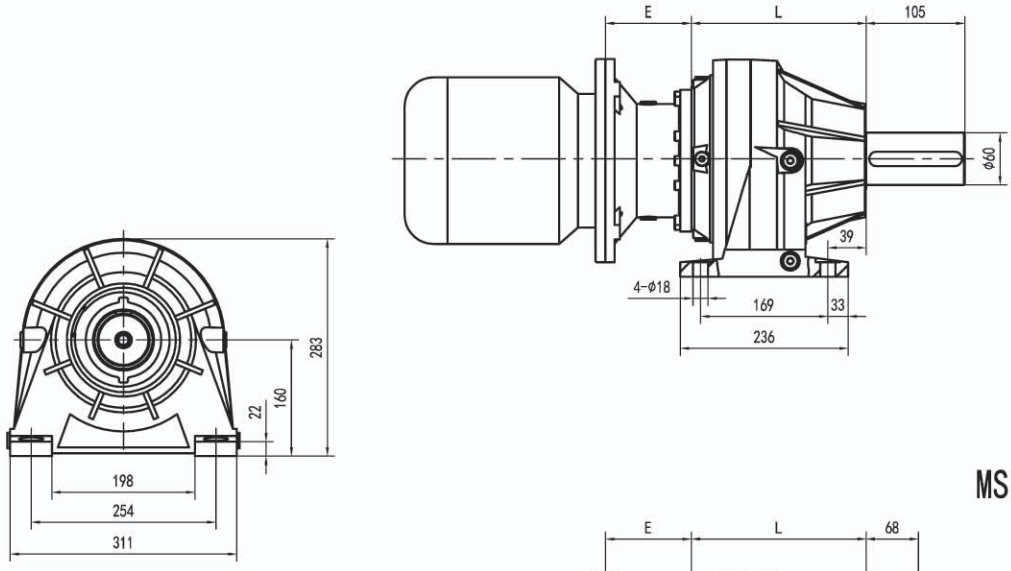

MS

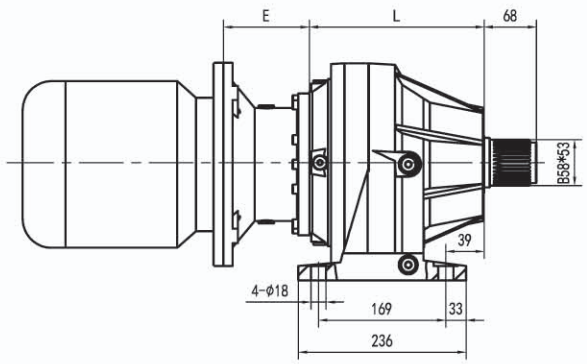

LP输出 LP VERSION	最大输出扭矩 MAX. TRANSMISSIBLE TORQUE	3500 Nm

	L				Kg				E								
	LS LK	LSH LP	HS HK	MK MS	LS LK	LSH LP	HS HK	MK MS	IEC 71	IEC 80	IEC 90	IEC 100	IEC 112	IEC 132	IEC 160	IEC 180	IEC 200
GTN03 L1	125	125	150	165	31	31	35	40						114	144	144	174
GTN03 L2	178	178	203	218	35	35	39	44	65	84	84	94	94	114	144		
GTN03 L3	231	231	256	271	39	39	43	48	65	84	84	94	94	114	144		
GTN03 L4	284	284	309	324	43	43	47	52	65	84	84	94	94	114	144		

GTN03 L

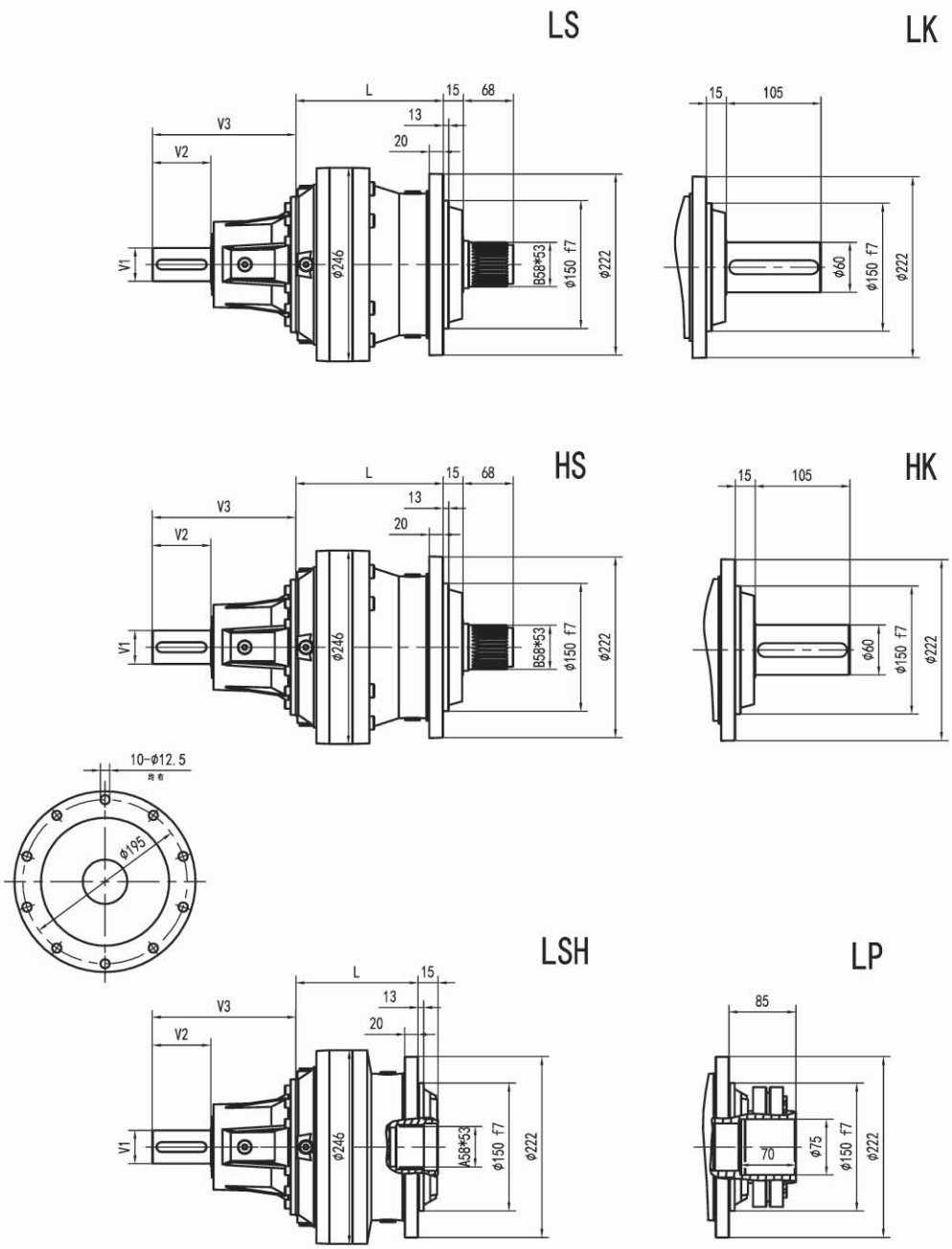
LS
LK
L
15
68
13
20
V3
V2
V1
φ246
B58*53
φ150 f7
φ222
105
φ60
HS
HK
10-φ12.5
均布
φ195
LSH
LP
A58*53
85
70
φ75

GTN03 L

MK

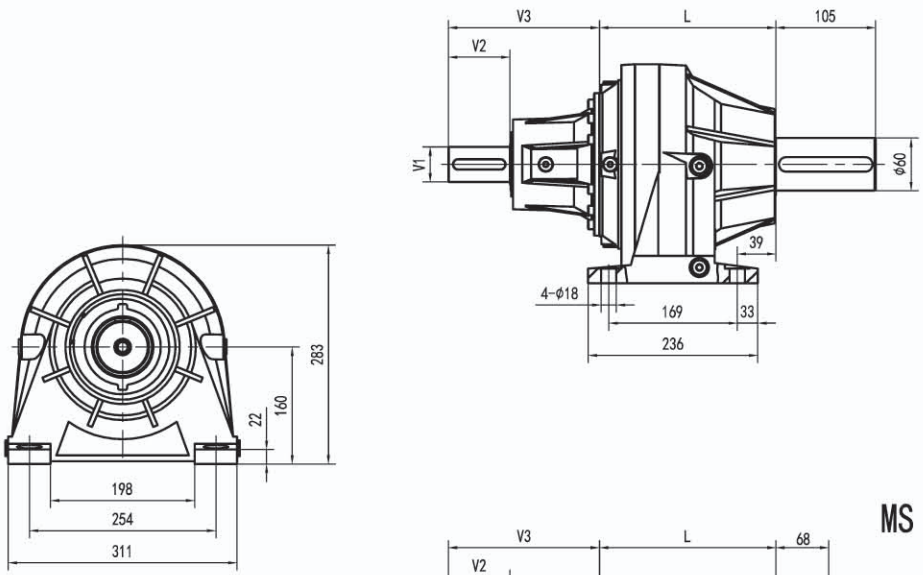

MS

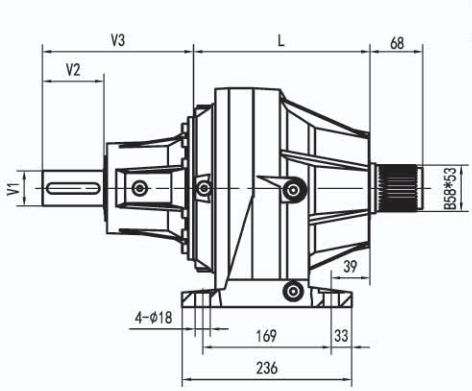

LP输出 LP VERSION	最大输出扭矩 MAX. TRANSMISSIBLE TORQUE	3500 Nm

	L				Kg				V1	V2	V3	Kg	V1	V2	V3	Kg
	LS LK	LSH LP	HS HK	MK MS	LS LK	LSH LP	HS HK	MK MS								
GTN03 L1	125	125	150	165	31	31	35	40	48	82	239	15				
GTN03 L2	178	178	203	218	35	35	39	44	24	36	137.5	6	38	58	158	7
GTN03 L3	231	231	256	271	39	39	43	48	24	36	137.5	6	38	58	158	7
GTN03 L4	284	284	309	324	43	43	47	52	24	36	137.5	6	38	58	158	7

GTN03 R

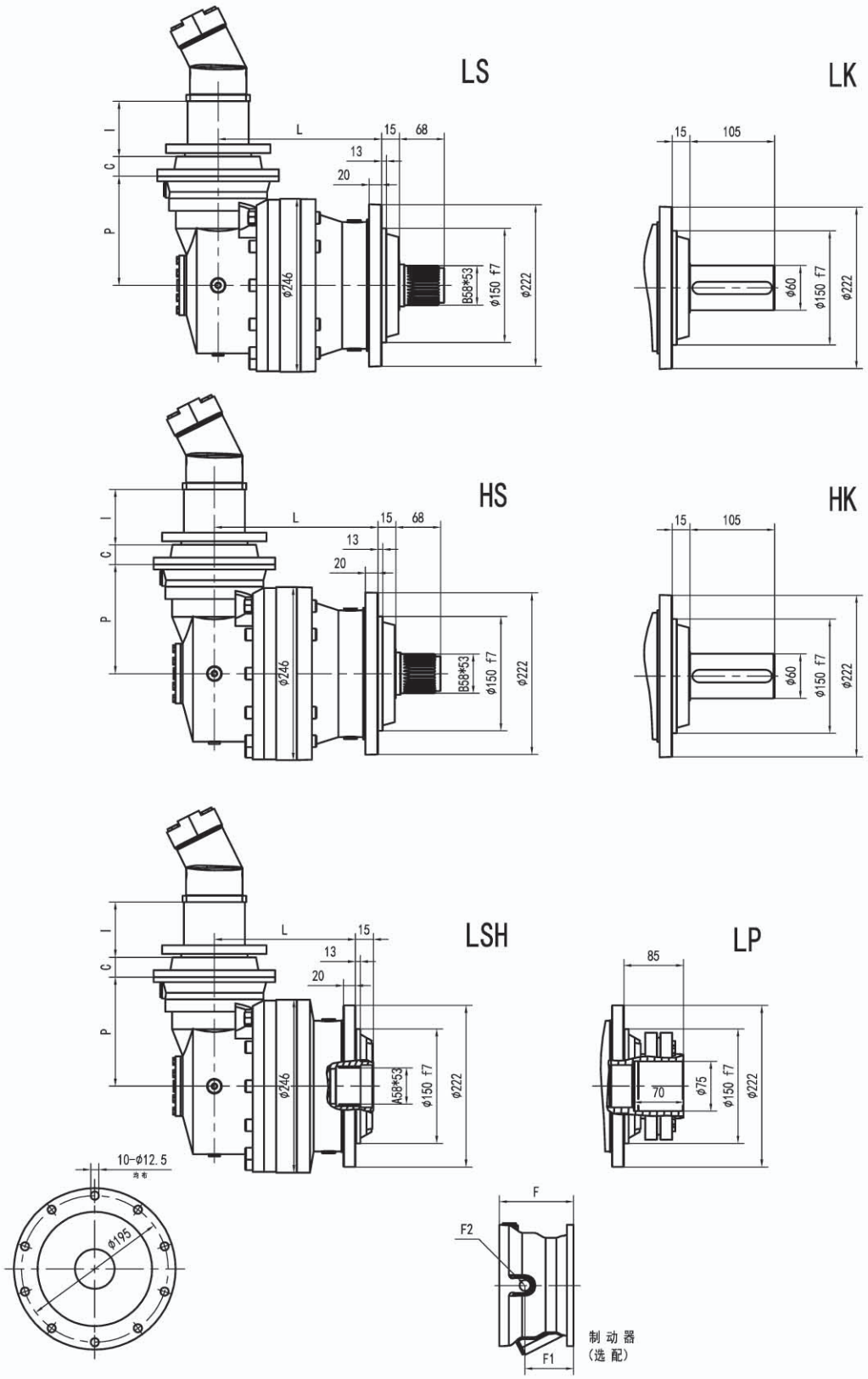
LS
LK
HS
HK
LSH
LP
L
15
68
13
20
I
C
P
ϕ246
B58*53
ϕ150 f7
ϕ222
105
ϕ60
A58*53
85
70
ϕ75
10-ϕ12.5
均布
ϕ195
F
F2
F1
制动器
(选配)

GTN03 R

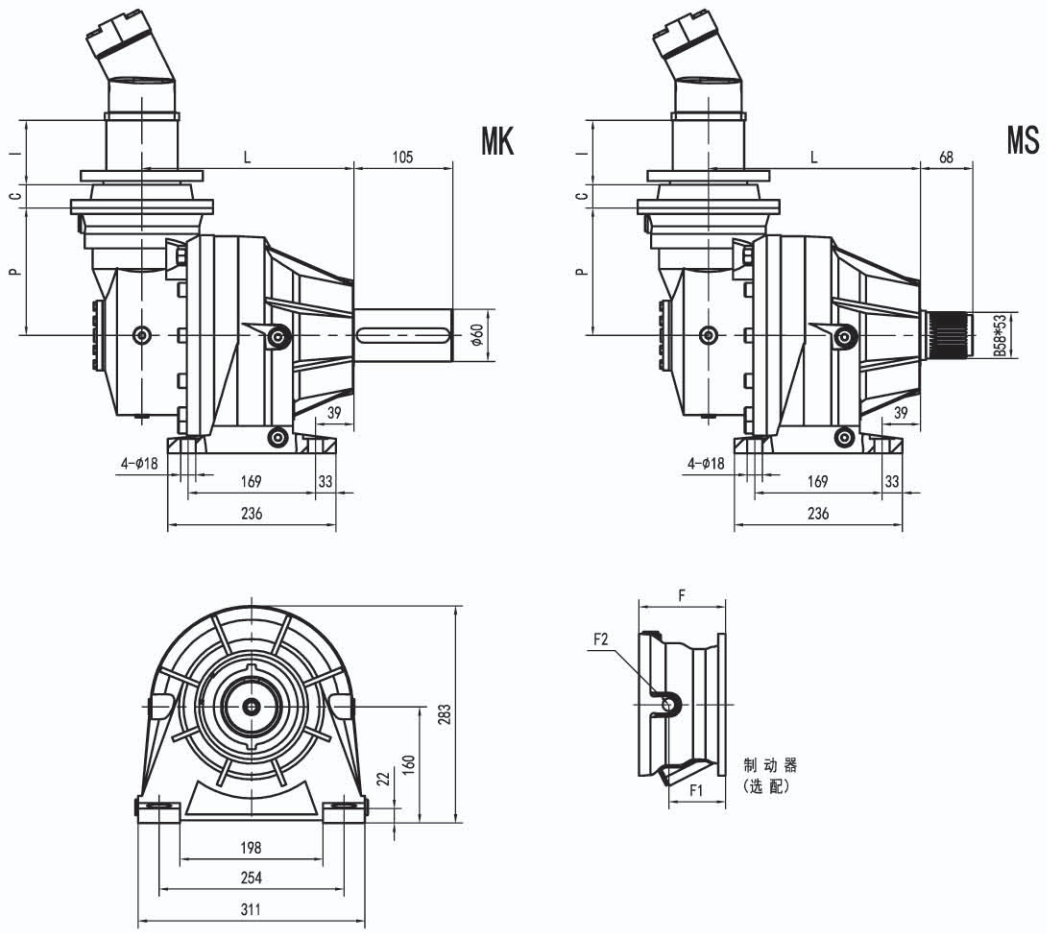

LP输出 LP VERSION	最大输出扭矩 MAX. TRANSMISSIBLE TORQUE	3500 Nm

	L				P	Kg				C	输入 Input	I	F	F1	F2	类型 Type	输入 Input	Kg
	LS LK	LSH LP	HS HK	MK MS		LS LK	LSH LP	HS HK	MK MS									
GTN03 R2	217	217	242	257	140	51	51	55	60	37	A	联系厂家	105	65	1/4 G	4	A	10
GTN03 R3	270	270	295	310	122	49	49	53	58	37	A		105	65	1/4 G	4	A	10
GTN03 R4	323	323	348	363	122	53	53	57	62	37	A		105	65	1/4 G	4	A	10

GTN03 R

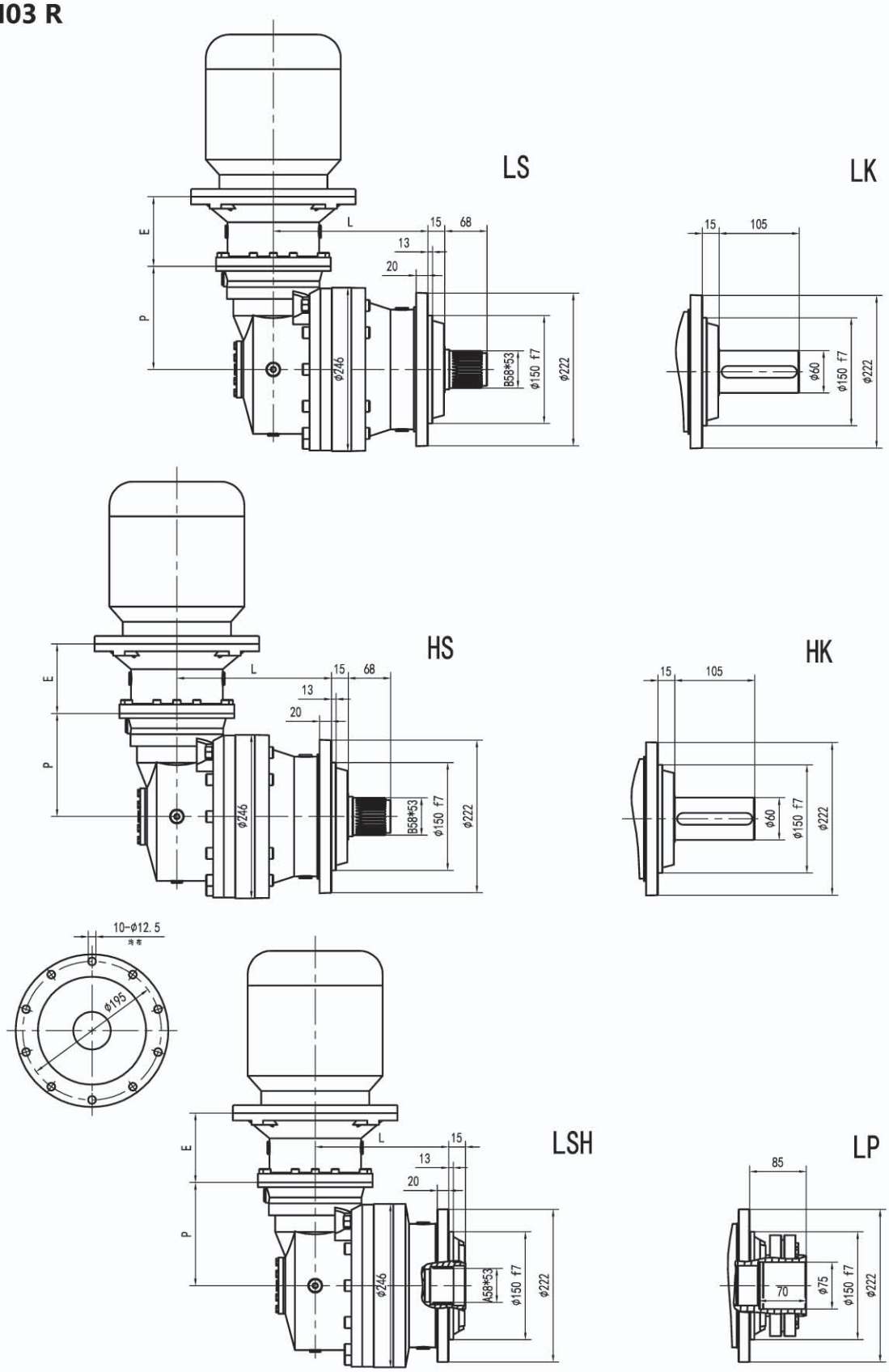
LS
LK
HS
HK
LSH
LP
E
P
L
15
68
13
20
105
ϕ246
B58*53
ϕ150 f7
ϕ222
ϕ60
10-ϕ12.5
均布
ϕ195
A58*53
85
70
ϕ75

GTN03 R

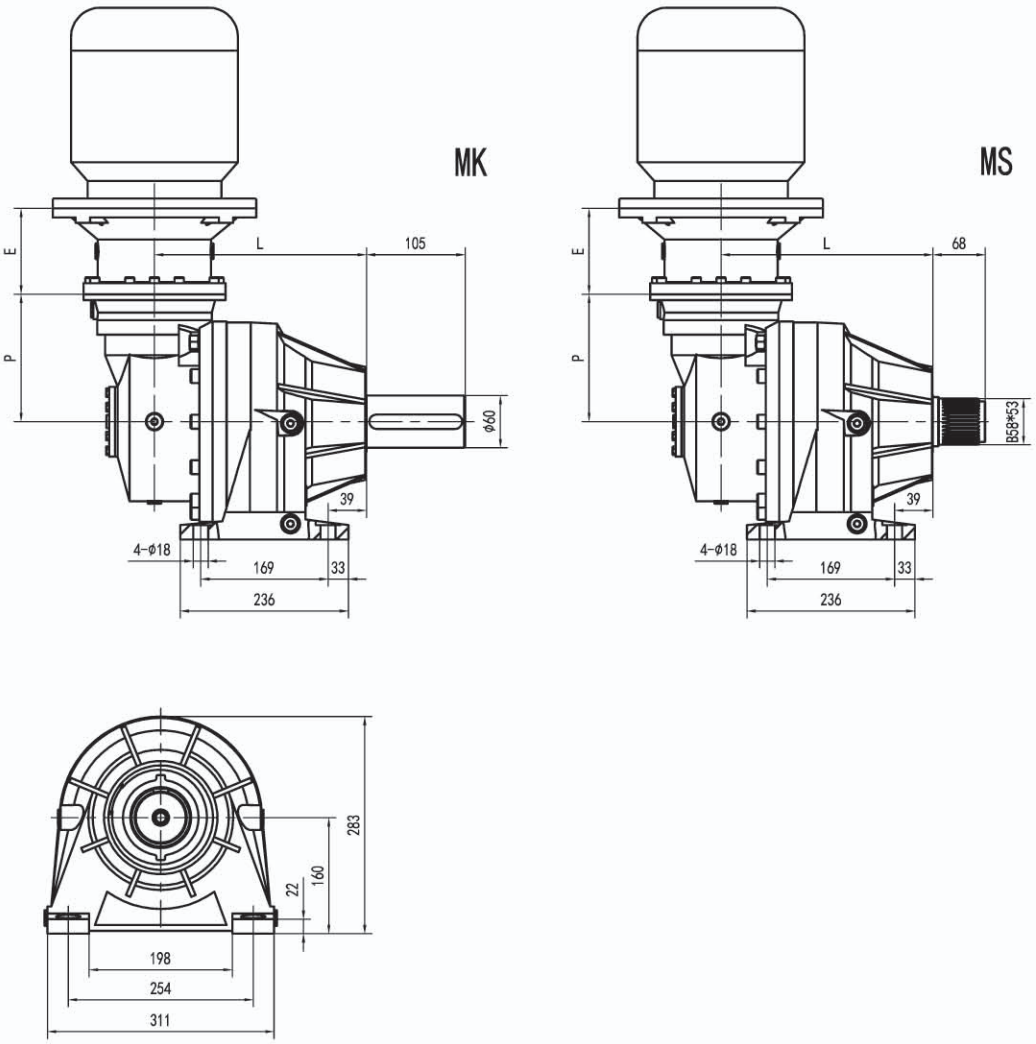

LP输出 LP VERSION	最大输出扭矩 MAX. TRANSMISSIBLE TORQUE	3500 Nm

	L				P	Kg				E					
	LS LK	LSH LP	HS HK	MK MS		LS LK	LSH LP	HS HK	MK MS	IEC 71	IEC 80	IEC 90	IEC 100	IEC 112	IEC 132
GTN03 R2	217	217	242	257	140	51	51	55	60	65	84	84	94	94	114
GTN03 R3	270	270	295	310	122	49	49	53	58	65	84	84	94	94	114
GTN03 R4	323	323	348	363	122	53	53	57	62	65	84	84	94	94	114

GTN03 R

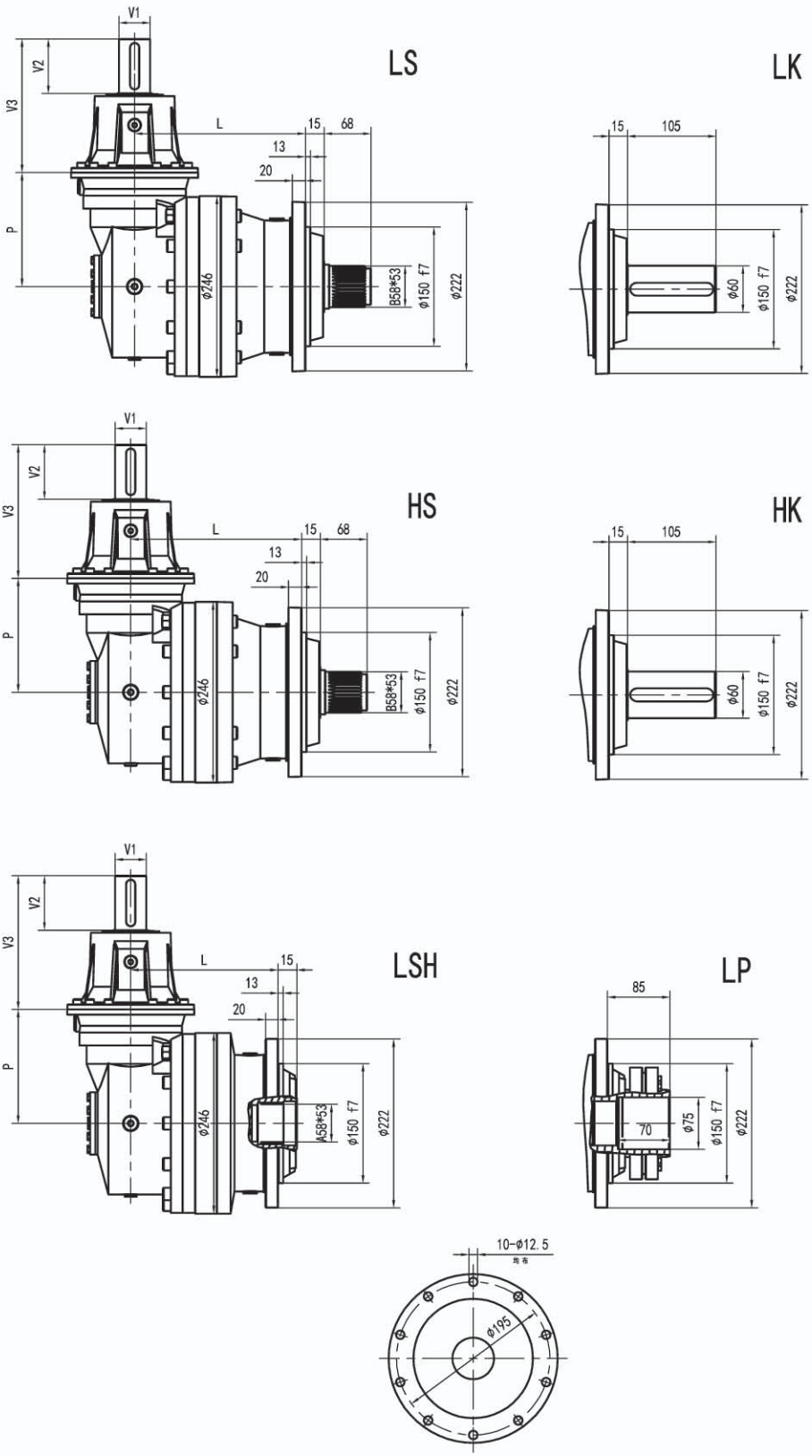
LS
LK
HS
HK
LSH
LP
V1
V2
V3
P
L
15
68
13
20
105
85
70
φ246
B58*53
A58*53
φ150 f7
φ222
φ60
φ75
10-φ12.5
均布
φ195

GTN03 R

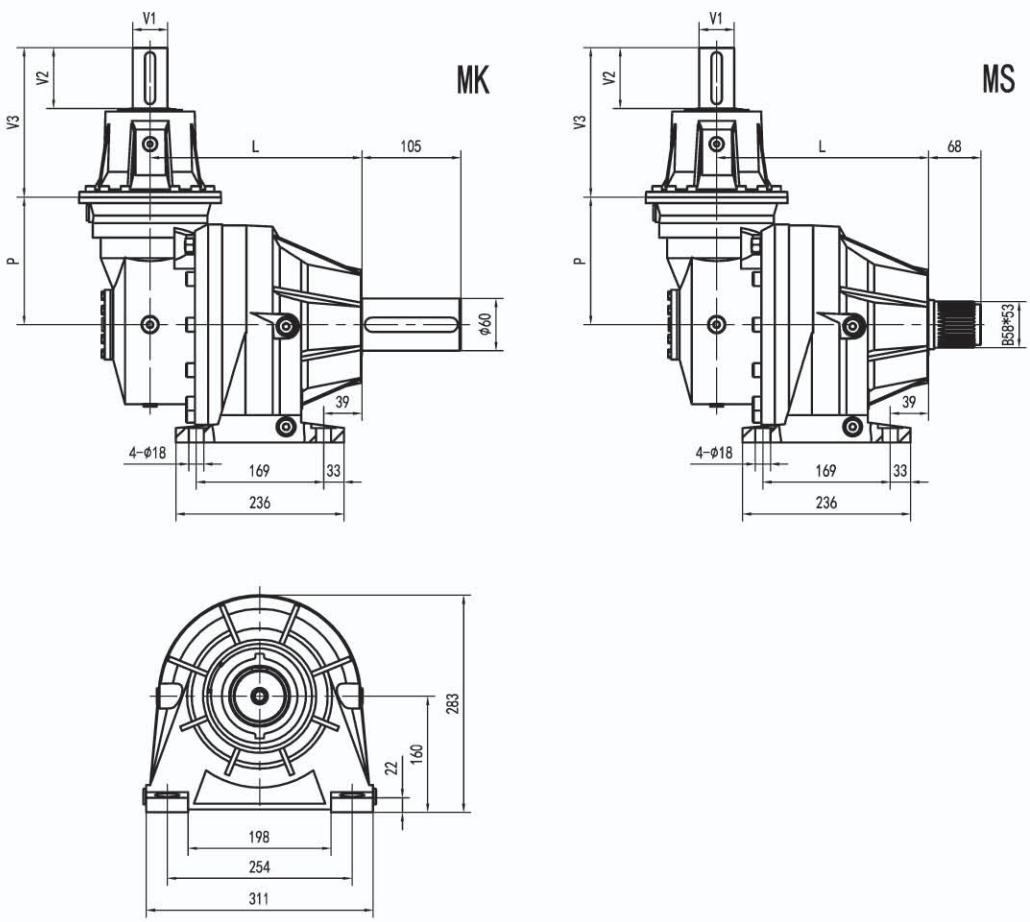

LP输出 LP VERSION	最大输出扭矩 MAX. TRANSMISSIBLE TORQUE	3500 Nm

	L				P	Kg				V1	V2	V3	Kg	V1	V2	V3	Kg
	LS LK	LSH LP	HS HK	MK MS		LS LK	LSH LP	HS HK	MK MS								
GTN03 R2	217	217	242	257	140	51	51	55	60	24	36	137.5	6	38	58	158	7
GTN03 R3	270	270	295	310	122	49	49	53	58	24	36	137.5	6	38	58	158	7
GTN03 R4	323	323	348	363	122	53	53	57	62	24	36	137.5	6	38	58	158	7

GTN03 L-GTN03 R

LK-HK

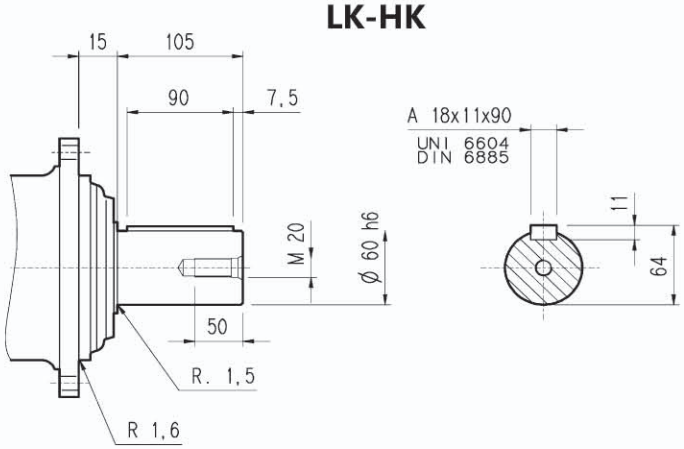

MK

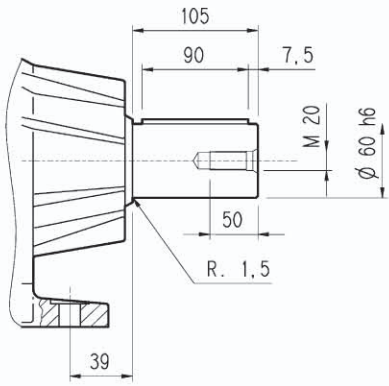

LS-HS

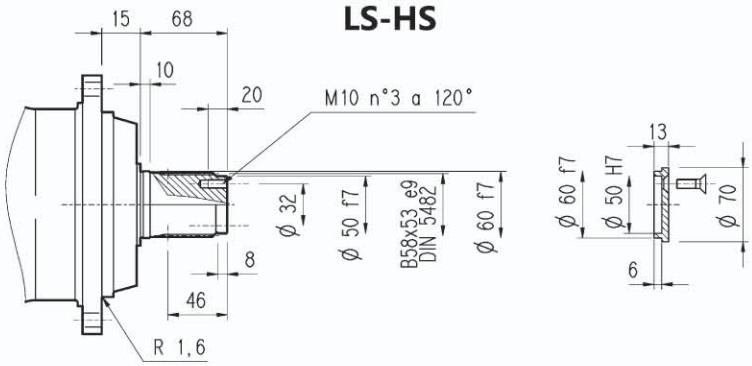

LSH

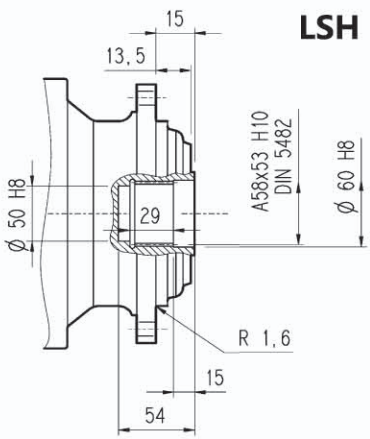

LP

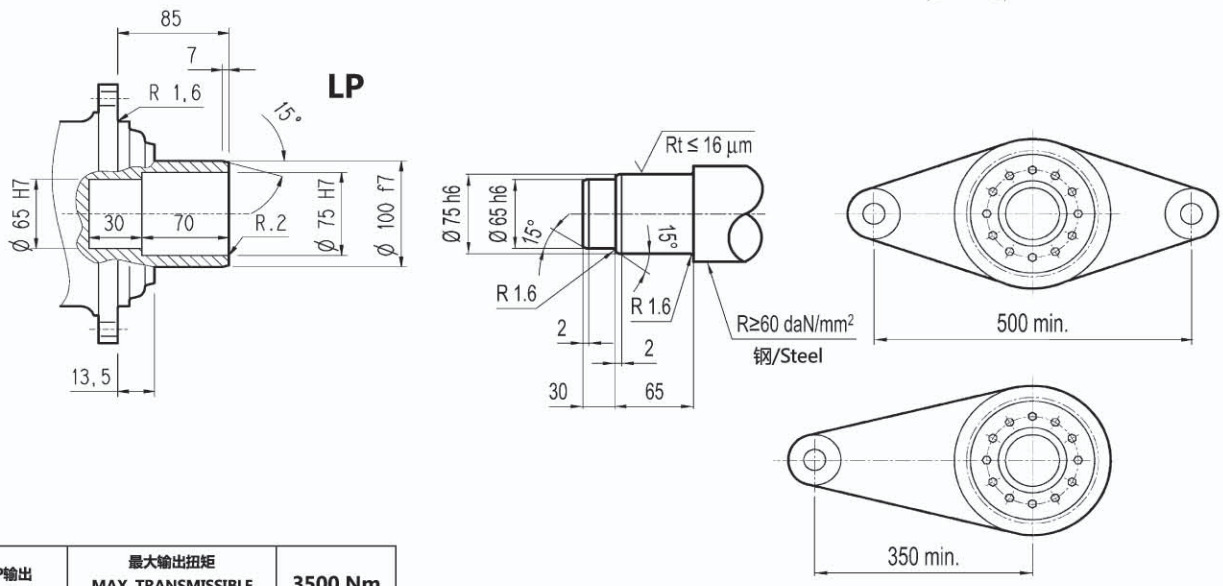

LP输出 LP VERSION	最大输出扭矩 MAX. TRANSMISSIBLE TORQUE	3500 Nm

GTN03 L-GTN03 R

法兰 / Flange

FOA



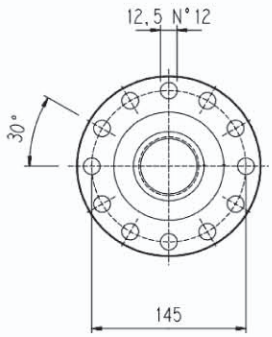

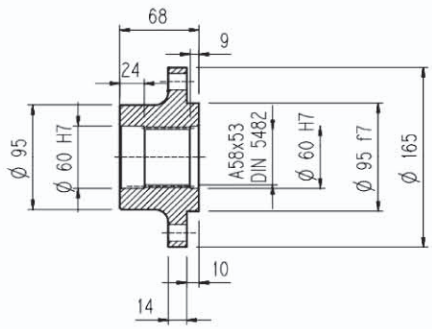

材料 : 钢 C40
Material : Steel C40

输出齿轮 / Output pinions

PM...



	m	z	x	dp	di	de	H	A	B	C	☆
PM501	5	19	0	95	82	104	77	12	9	72	□
PM502	5	19	0	95	82	104	68	0	0	0	□
PM503	5	20	0	100	87.5	110	68	18	0	0	■
PM504	5	22	0	110	97.5	120	68	18	0	0	■
PM601	6	14	0.500	84	75	99.6	68	0	0	0	□
PM602	6	18	0.500	108	99	123.6	68	0	0	0	□
PM603	6	20	0.833	120	115	140	68	0	0	0	□
PM801	8	13	0.675	104	95	127.6	68	0	0	0	■
PM802	8	14	0	112	92	126	68	0	0	0	■
PM803	8	14	0	112	92	126	80	0	12	72	■
PM804	8	15	0	120	100	136	68	0	0	0	□
PM805	8	22	0	176	156	190	77	12	10	71	□
PM1001	10	16	0.500	160	145	188	75	0	7	72	□

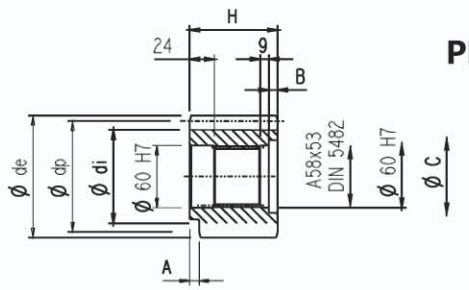

☆	材料 / Material
□	39NiCrMo3 调制钢 Steel 39NiCrMo3 hardened and tempered
■	18NiCrMo5 表面渗碳钢 18NiCrMo5 Case hardened

套筒联轴器i / Sleeve couplings

HOS



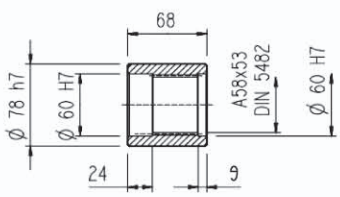

材料 : 16CrNi4
Material : Steel 16CrNi4

花键 / Splined bars

SOF



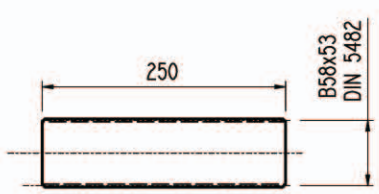

表面硬化钢 18NiCrMo5 UNI 5331 表面硬化必须达到 50-55 HRC
Case hardening steel 18NiCrMo5 UNI 5331
must be case hardened 50-55 HRC

锁紧盘 / Shrink disc

LOP



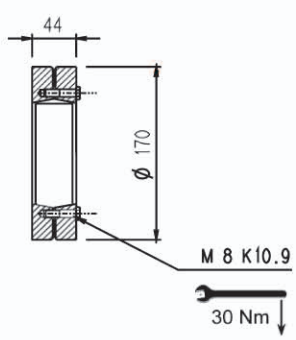

GTN03 L - GTN03 R

输入轴 / Input shaft

S_ _

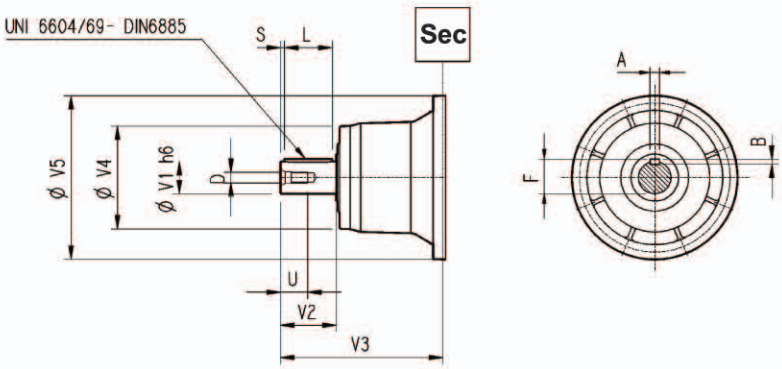

SV_ _

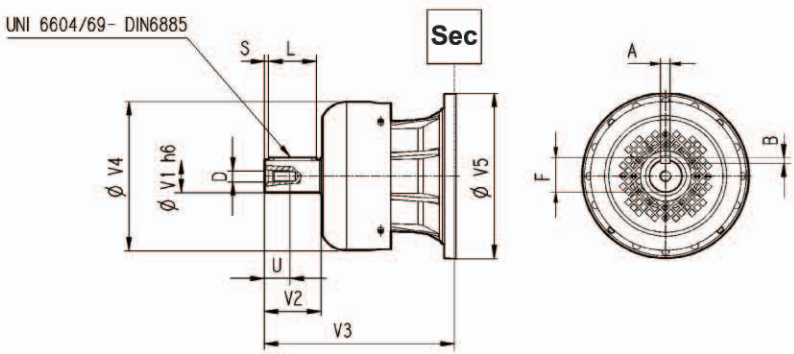

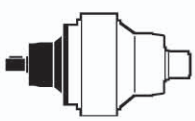

	CODE	V1	V2	V3	V4	V5	A	B	F	L	S	D	U
GTN03 L1	S05B	48	82	239	155	245	14	9	51.5	70	6	M16	36
	SV05B	48	82	276	219.5	244	14	9	51.5	70	6	M16	36
GTN03 L2	S01A	24	36	137.5	120	186	8	7	27	30	3	M8	19
	S01B	38	58	158	120	186	10	8	41	50	4	M12	28
GTN03 L3	S01A	24	36	137.5	120	186	8	7	27	30	3	M8	19
	S01B	38	58	158	120	186	10	8	41	50	4	M12	28
GTN03 L4	S01A	24	36	137.5	120	186	8	7	27	30	3	M8	19
	S01B	38	58	158	120	186	10	8	41	50	4	M12	28
GTN03 R2-R3-R4	S01A	24	36	137.5	120	186	8	7	27	30	3	M8	19
	S01B	38	58	158	120	186	10	8	41	50	4	M12	28

不带电机的输入法兰尺寸

Input dimension without motor adaptor

S_ _

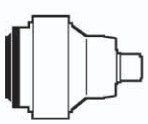

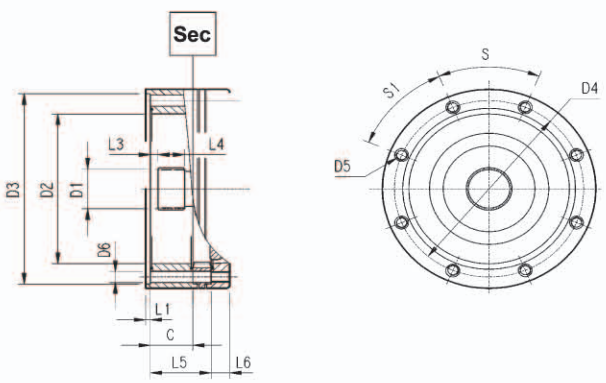

	CODE	D1	D2	D3	D4	D5	D6	L1	L2	L3	L4	L5	L6	S	S1	输入 Input
GTN03 L1	S9AA	40x36 DIN5482	140	178 H7	165	M10 n°8	11	4	/	9	18	/	18	45°	45°	A
GTN03 L2	S9AA	40x36 DIN5482	140	178 H7	165	M10 n°8	11	4	/	9	18	53	18	45°	45°	A
GTN03 L3	S9AA	40x36 DIN5482	140	178 H7	165	M10 n°8	11	4	/	9	18	106	18	45°	45°	A
GTN03 L4	S9AA	40x36 DIN5482	140	178 H7	165	M10 n°8	11	4	/	9	18	159	18	45°	45°	A
GTN03 R2-R3-R4	S9AA	40x36 DIN5482	140	178 H7	165	M10 n°8	11	4	/	9	18	37	18	45°	45°	A

GTN03 L - GTN03R

输出轴上允许的径向和轴向载荷
$Fh_2 : n_2 . h = 10000$

Permissible radial and axial loadson output shaft with Fh_2
$n_2 \cdot h = 10000$

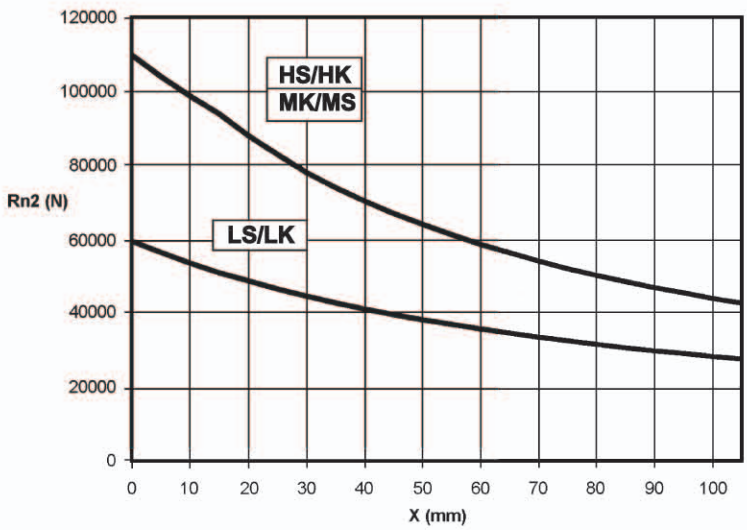

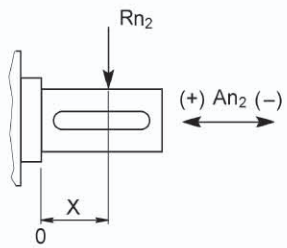

	An2 (+)	An2 (-)
LS - LK	55000	44000
HS - HK - MK - MS	55000	44000

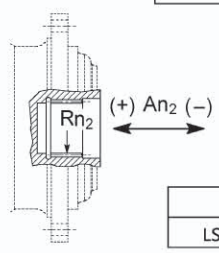

	Rn2	An2 (+/-)
LSH	24000	25000

轴上的载荷修正系数 fh_2 Load corrective factor fh_2 on shafts	$Fh_2 = n_2 \cdot h$		10000	25000	50000	100000	500000	1000000
	fh_2	LS - LK - LSH	1	0.74	0.58	0.46	0.27	0.21
		HS - HK - MK- MS	1	0.76	0.61	0.50	0.31	0.25

输入轴上允许的径向和轴向载荷
$Fh_1 n_1 . h = 250000$

Permissible radial loads on inputshaft with $Fh_1 : n_1 \cdot h = 250000$

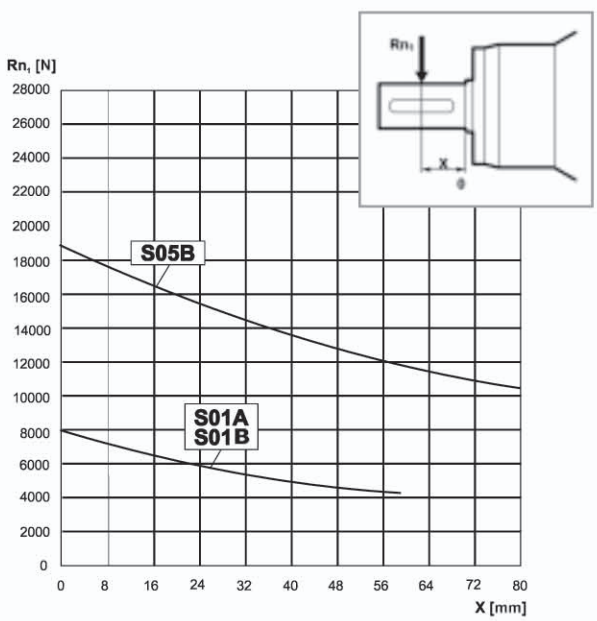

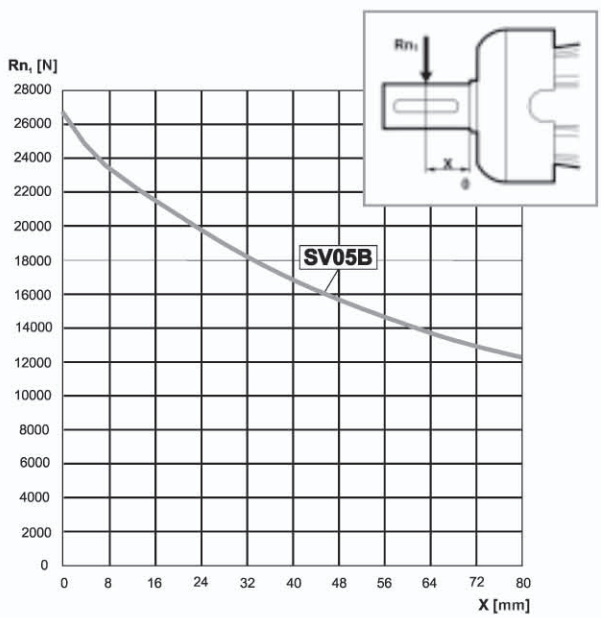

轴上的载荷修正系数 fh_1 Load corrective factor fh_1 on shafts	$Fh_1 = n_1 \cdot h$	250000	500000	1000000	2000000	5000000	10000000
	fh_1	1	0.79	0.63	0.50	0.37	0.29

GTN04 L

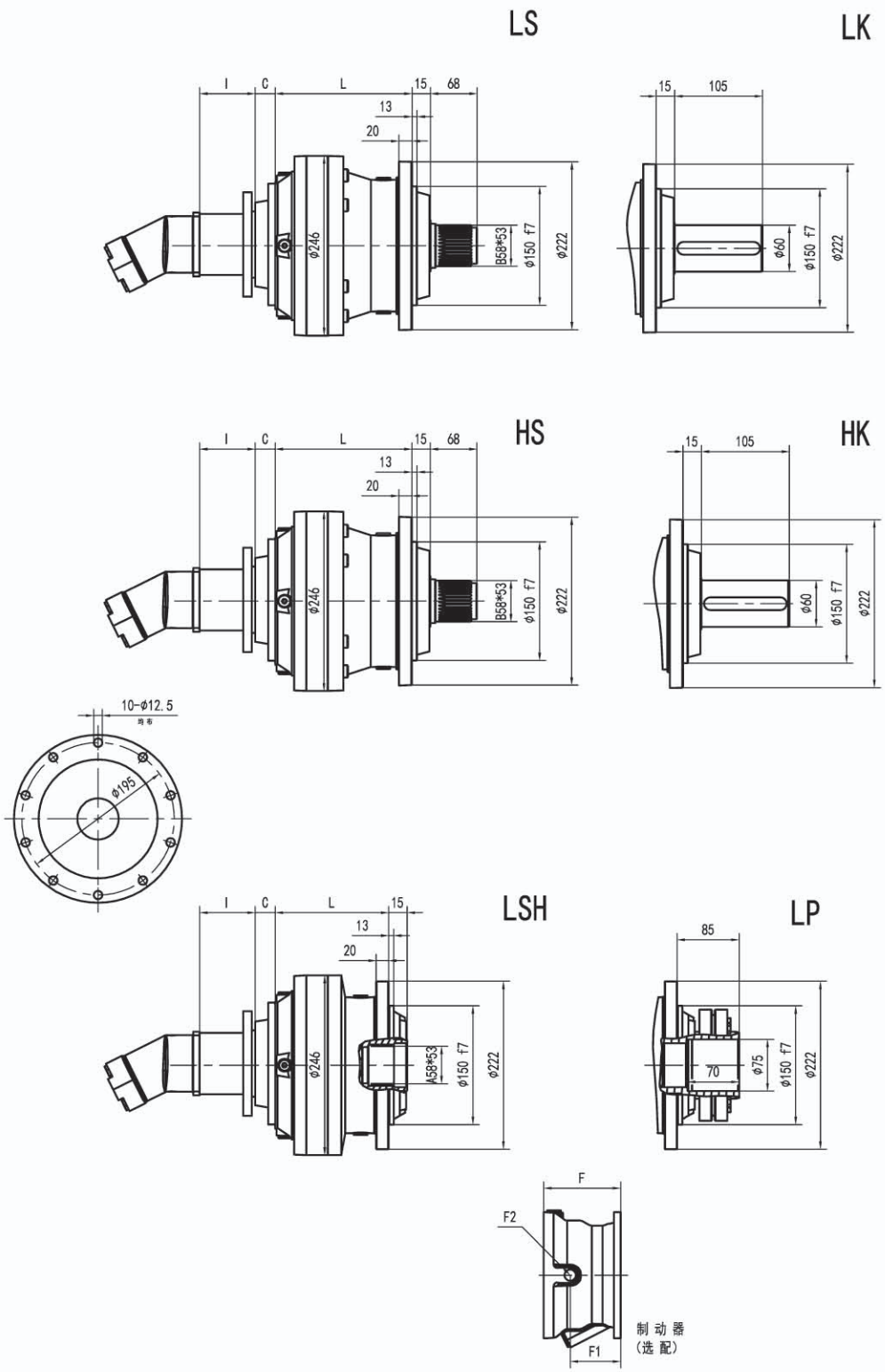
LS
LK
I
C
L
15
68
13
20
ϕ246
B58*53
ϕ150 f7
ϕ222
105
ϕ60
HS
HK
10-ϕ12.5
均布
ϕ195
LSH
LP
85
70
ϕ75
F
F2
F1
制动器
(选配)

GTN04 L

MK

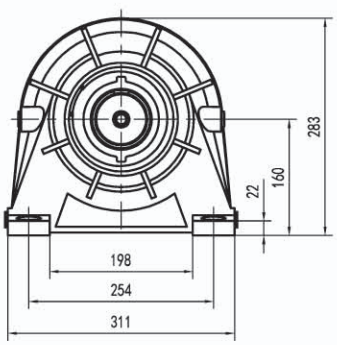

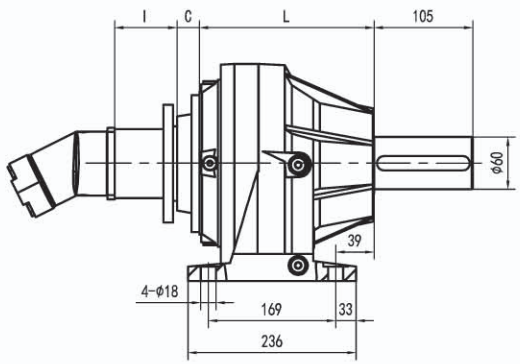

MS

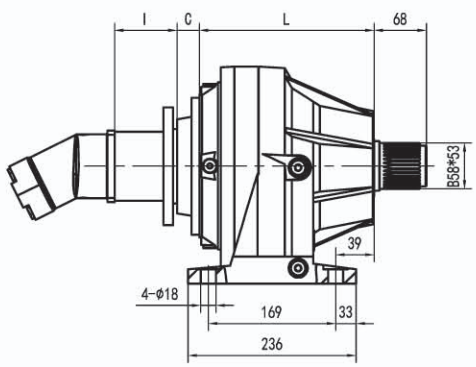

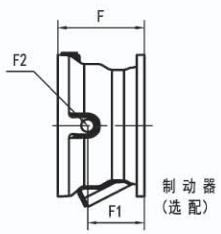

LP输出 LP VERSION	最大输出扭矩 MAX. TRANSMISSIBLE TORQUE	6000 Nm

	L				Kg												
	LS LK	LSH LP	HS HK	MK MS	LS LK	LSH LP	HS HK	MK MS	C	输入 Input	I	F	F1	F2	类型 Type	输入 Input	Kg
GTN03 L1	125	125	150	165	31	31	35	40	37	A	联系厂家	145	95	1/4 G	5	A	16
GTN03 L2	190	190	215	230	35	35	39	44	37	A		105	65	1/4 G	4	A	10
GTN03 L3	243	243	268	283	39	39	43	48	37	A		105	65	1/4 G	4	A	10
GTN03 L4	296	296	321	336	43	43	47	52	37	A		105	65	1/4 G	4	A	10

GTN04 L

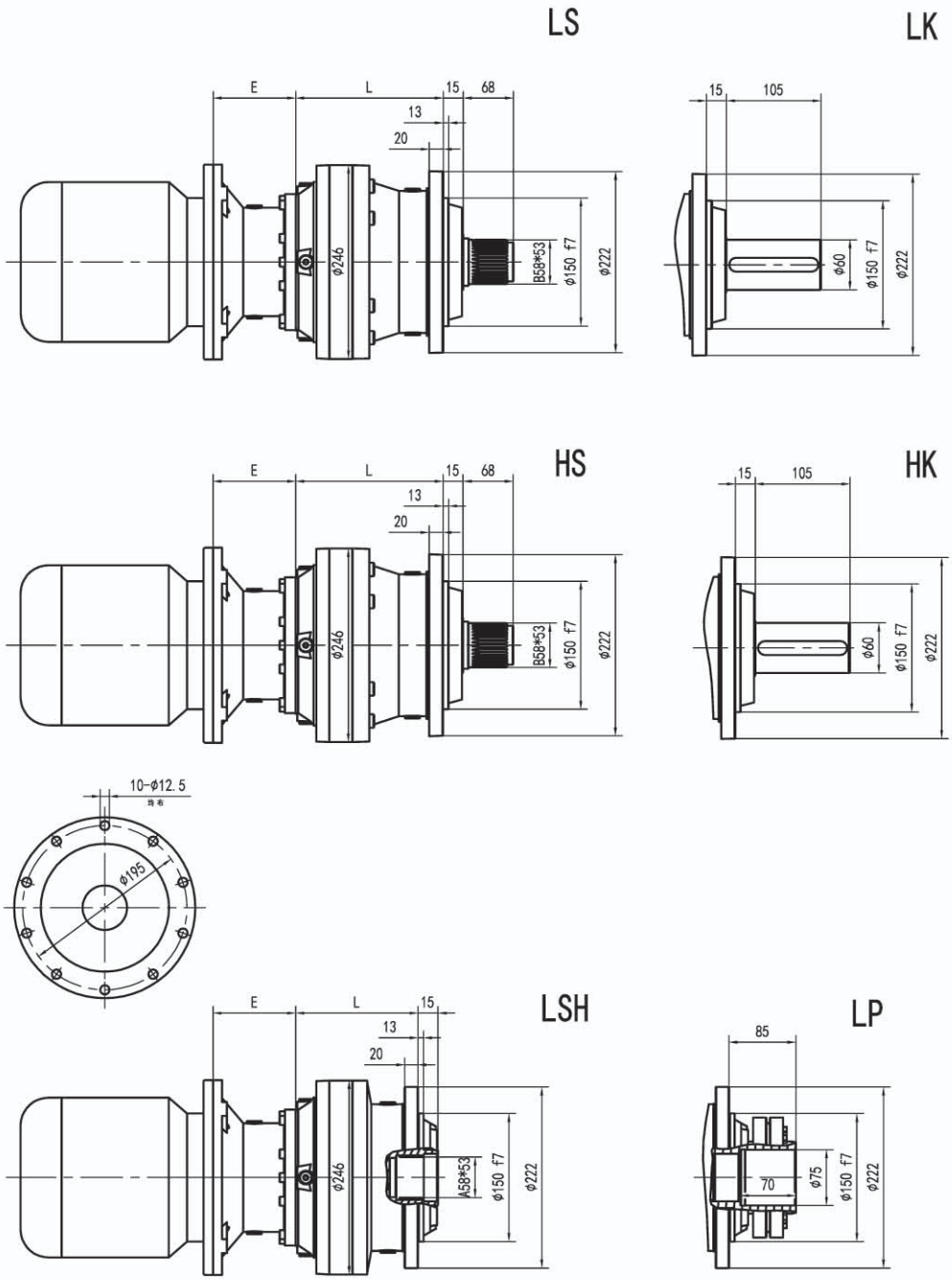
LS
LK
E
L
15
68
13
20
15
105
ϕ246
B58*53
ϕ150 f7
ϕ222
ϕ60
HS
HK
10-ϕ12.5
均布
ϕ195
LSH
LP
85
70
ϕ75

GTN04 L

MK

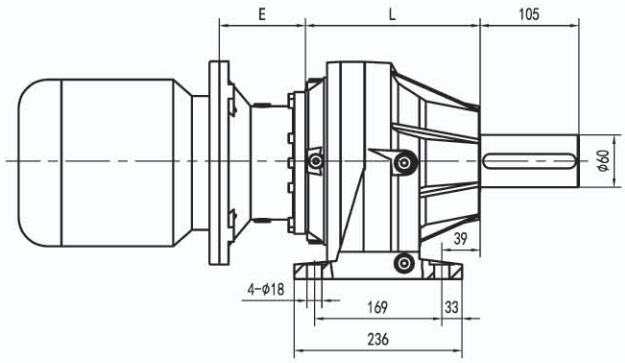

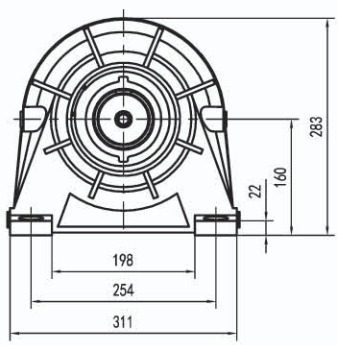

MS

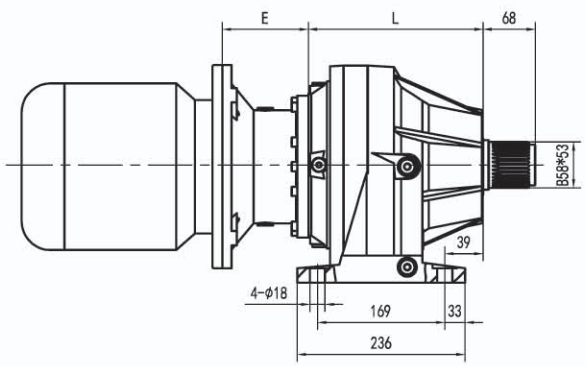

LP输出 LP VERSION	最大输出扭矩 MAX. TRANSMISSIBLE TORQUE	6000 Nm

	L				Kg				E								
	LS LK	LSH LP	HS HK	MK MS	LS LK	LSH LP	HS HK	MK MS	IEC 71	IEC 80	IEC 90	IEC 100	IEC 112	IEC 132	IEC 160	IEC 180	IEC 200
GTN03 L1	125	125	150	165	31	31	35	40						114	144	144	174
GTN03 L2	190	190	215	230	35	35	39	44	65	84	84	94	94	114	144		
GTN03 L3	243	243	268	283	39	39	43	48	65	84	84	94	94	114	144		
GTN03 L4	296	296	321	336	43	43	47	52	65	84	84	94	94	114	144		

GTN04 L

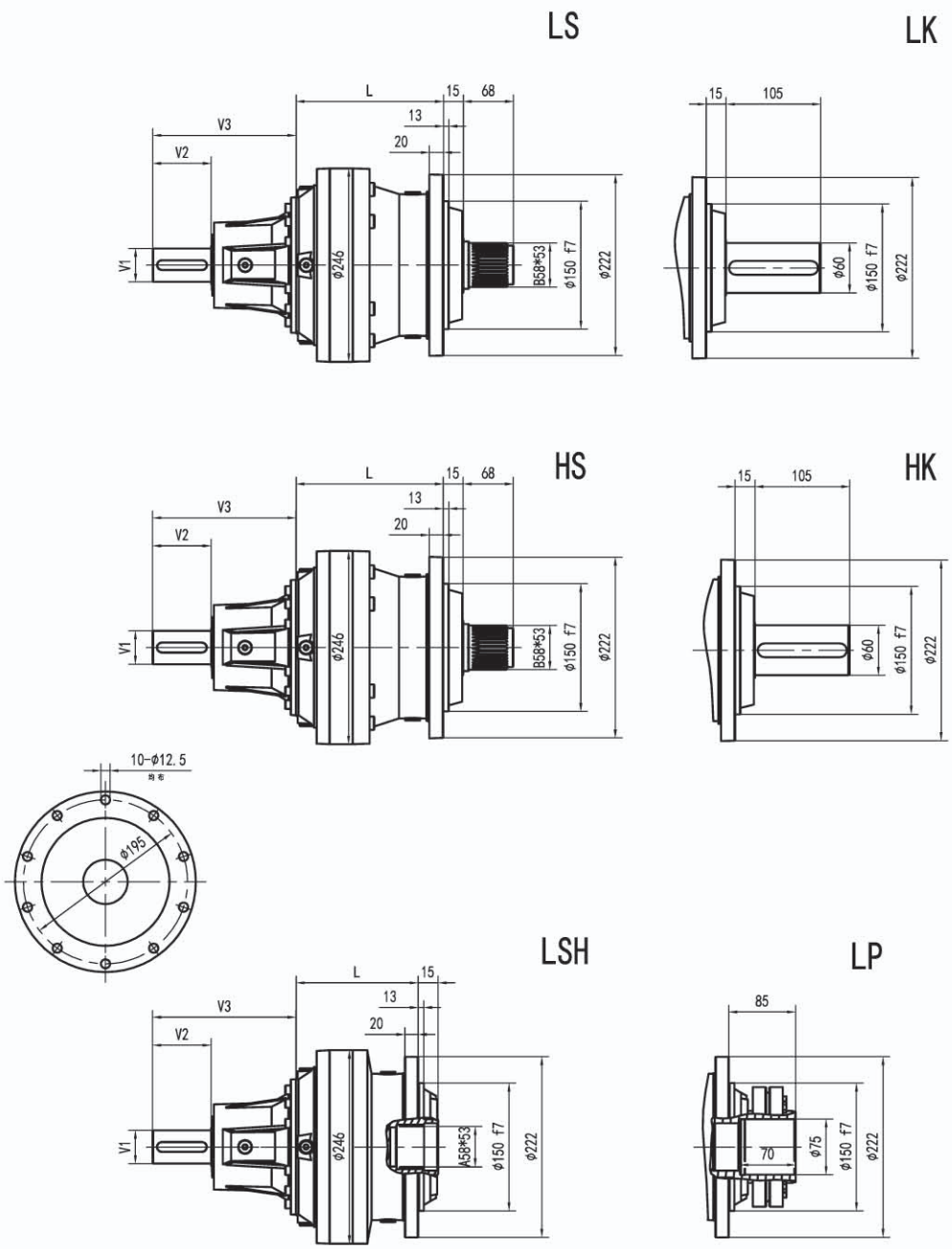
LS
LK
L
15
68
13
20
V3
V2
V1
φ246
B58*53
φ150 f7
φ222
105
φ60
HS
HK
10-φ12.5
均布
φ195
LSH
LP
A58*53
85
70
φ75

GTN04 L

MK

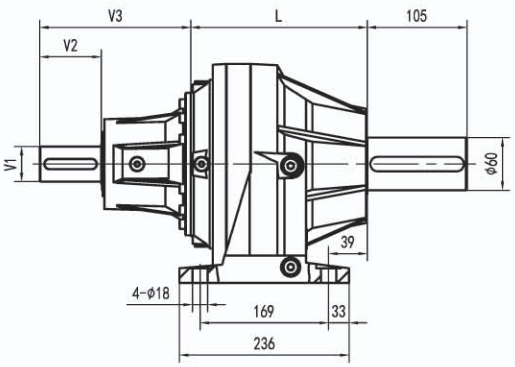

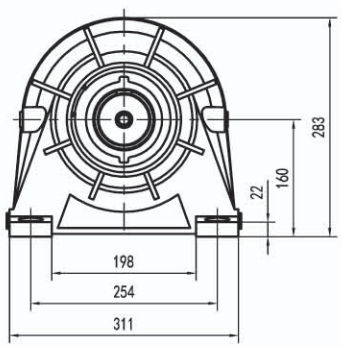

MS

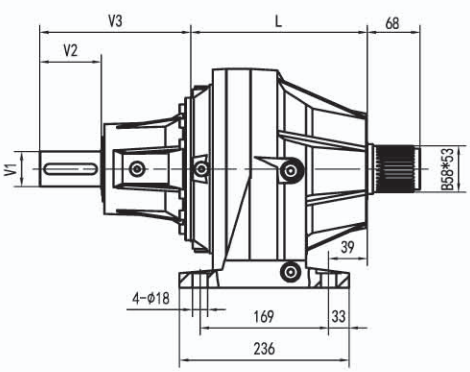

LP输出 LP VERSION	最大输出扭矩 MAX. TRANSMISSIBLE TORQUE	6000 Nm

	L				Kg				V1	V2	V3	Kg	V1	V2	V3	Kg
	LS LK	LSH LP	HS HK	MK MS	LS LK	LSH LP	HS HK	MK MS								
GTN03 L1	125	125	150	165	31	31	35	40	48	82	239	15				
GTN03 L2	190	190	215	230	35	35	39	44	24	36	137.5	6	38	58	158	7
GTN03 L3	243	243	268	283	39	39	43	48	24	36	137.5	6	38	58	158	7
GTN03 L4	296	296	321	336	43	43	47	52	24	36	137.5	6	38	58	158	7

GTN04 R

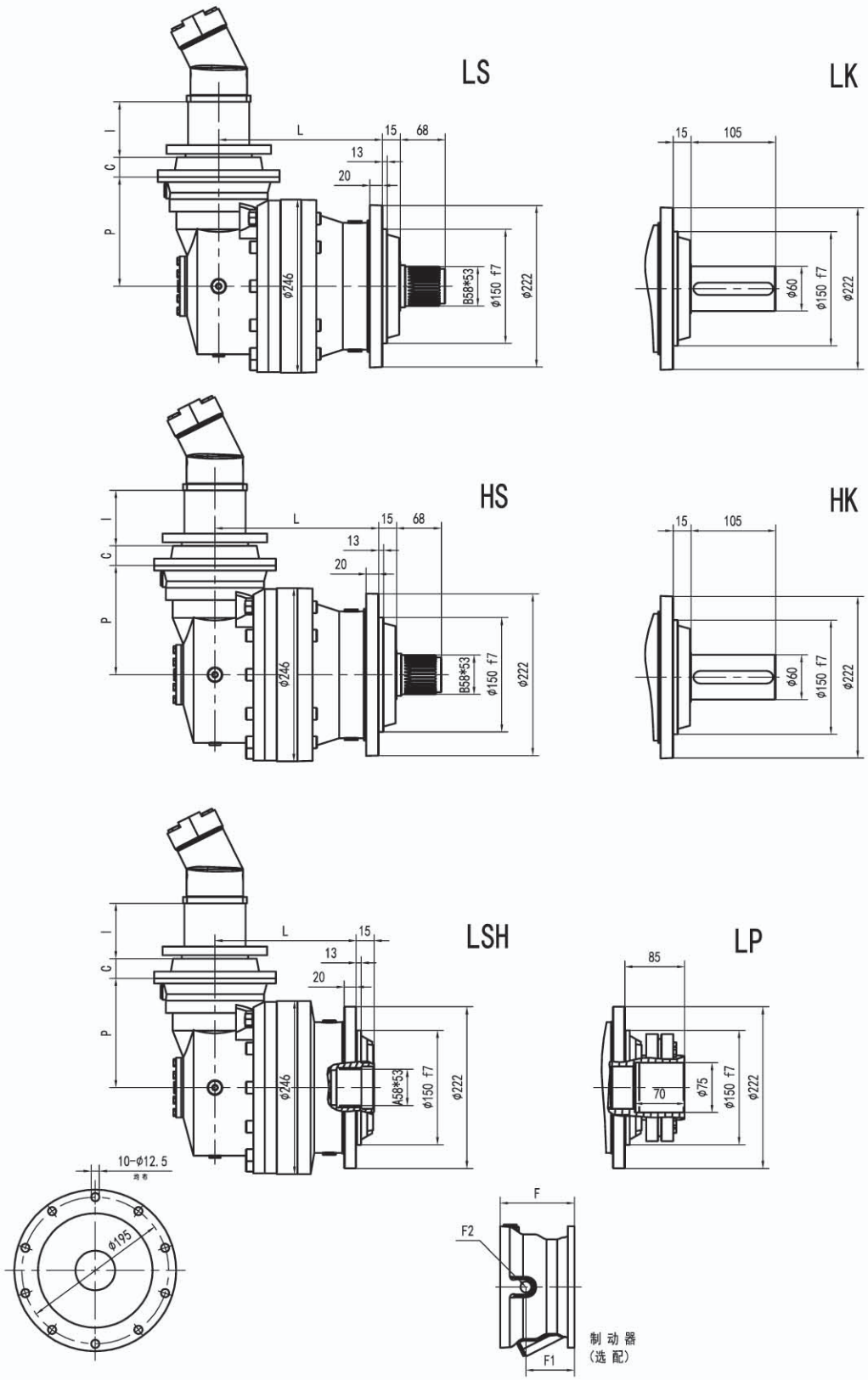
LS
LK
HS
HK
LSH
LP
L
I
C
P
15
68
13
20
105
85
70
ø246
B58*53
ø150 f7
ø222
ø60
ø75
A58*53
10-ø12.5
均布
ø195
F
F2
F1
制动器
(选配)

GTN04 R

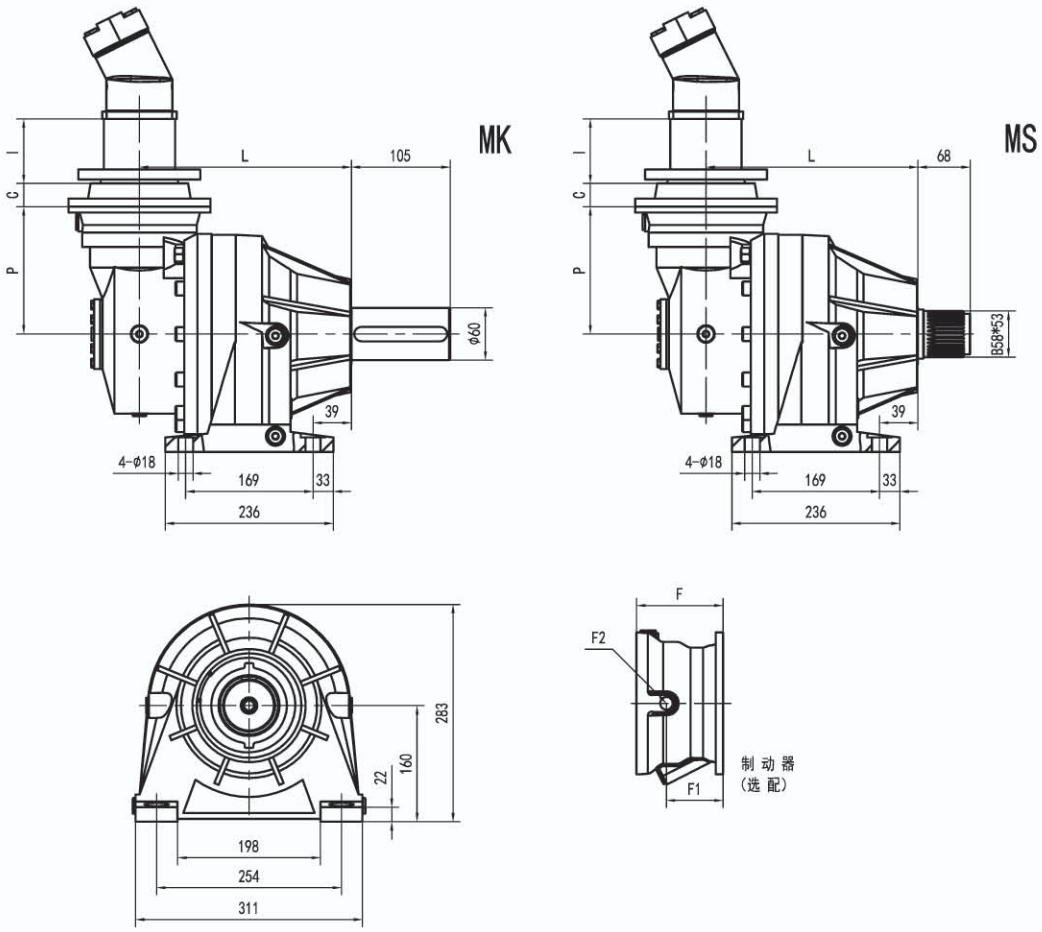

LP输出 LP VERSION	最大输出扭矩 MAX. TRANSMISSIBLE TORQUE	6000 Nm

	L				P	Kg				C	输入 Input	I	F	F1	F2	类型 Type	输入 Input	Kg
	LS LK	LSH LP	HS HK	MK MS		LS LK	LSH LP	HS HK	MK MS									
GTN03 R2	217	217	242	257	140	51	51	55	60	37	A	联系厂家	105	65	1/4 G	A	A	10
GTN03 R3	282	282	307	322	122	49	49	53	58	37	A		105	65	1/4 G	4	A	10
GTN03 R4	335	335	360	375	122	53	53	57	62	37	A		105	65	1/4 G	4	A	10

GTN04 R

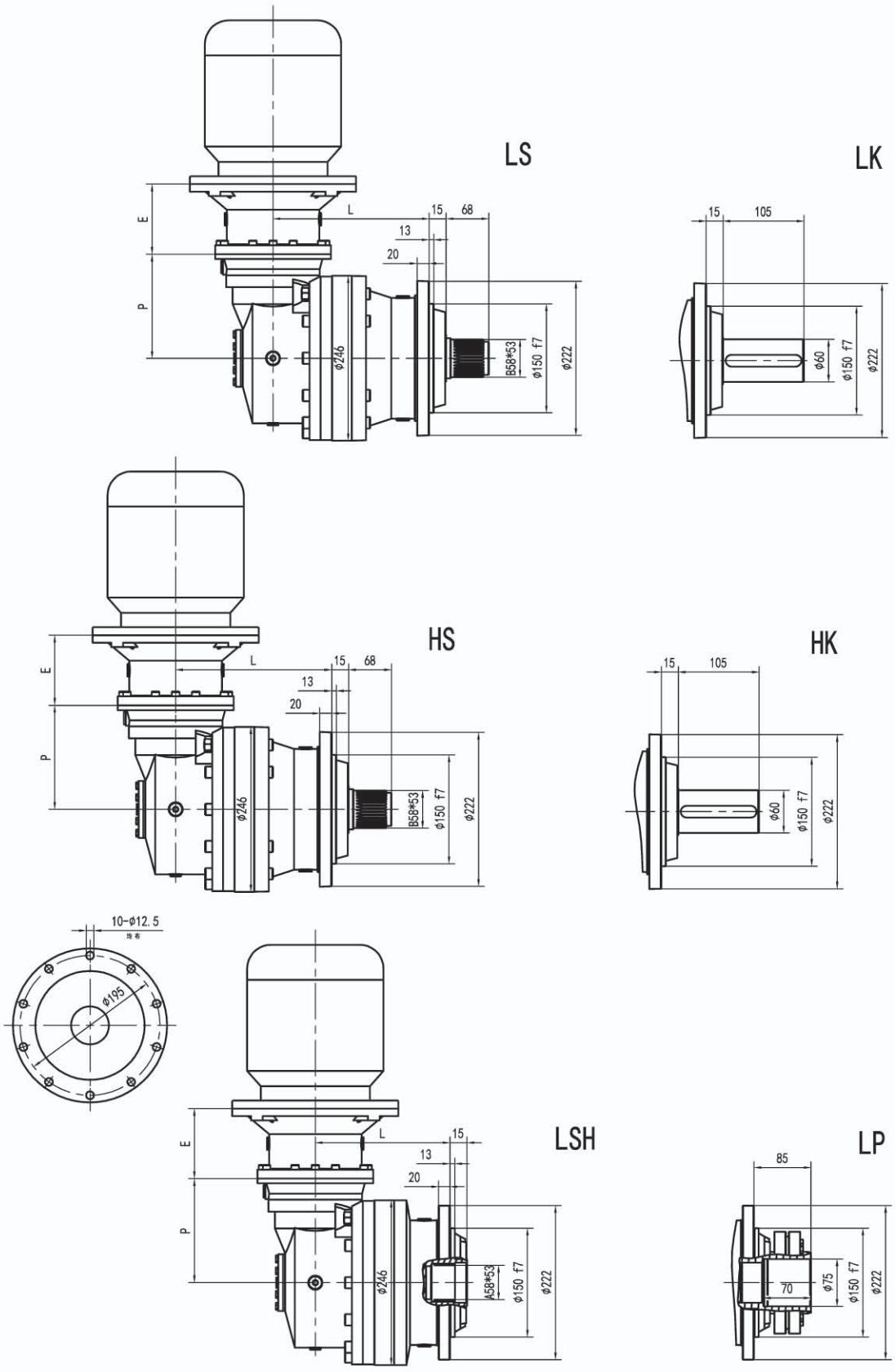
LS
LK
HS
HK
LSH
LP
E
P
L
15
68
13
20
105
ϕ246
B58*53
ϕ150 f7
ϕ222
ϕ60
10-ϕ12.5
均布
ϕ195
A58*53
85
70
ϕ75

GTN04 R

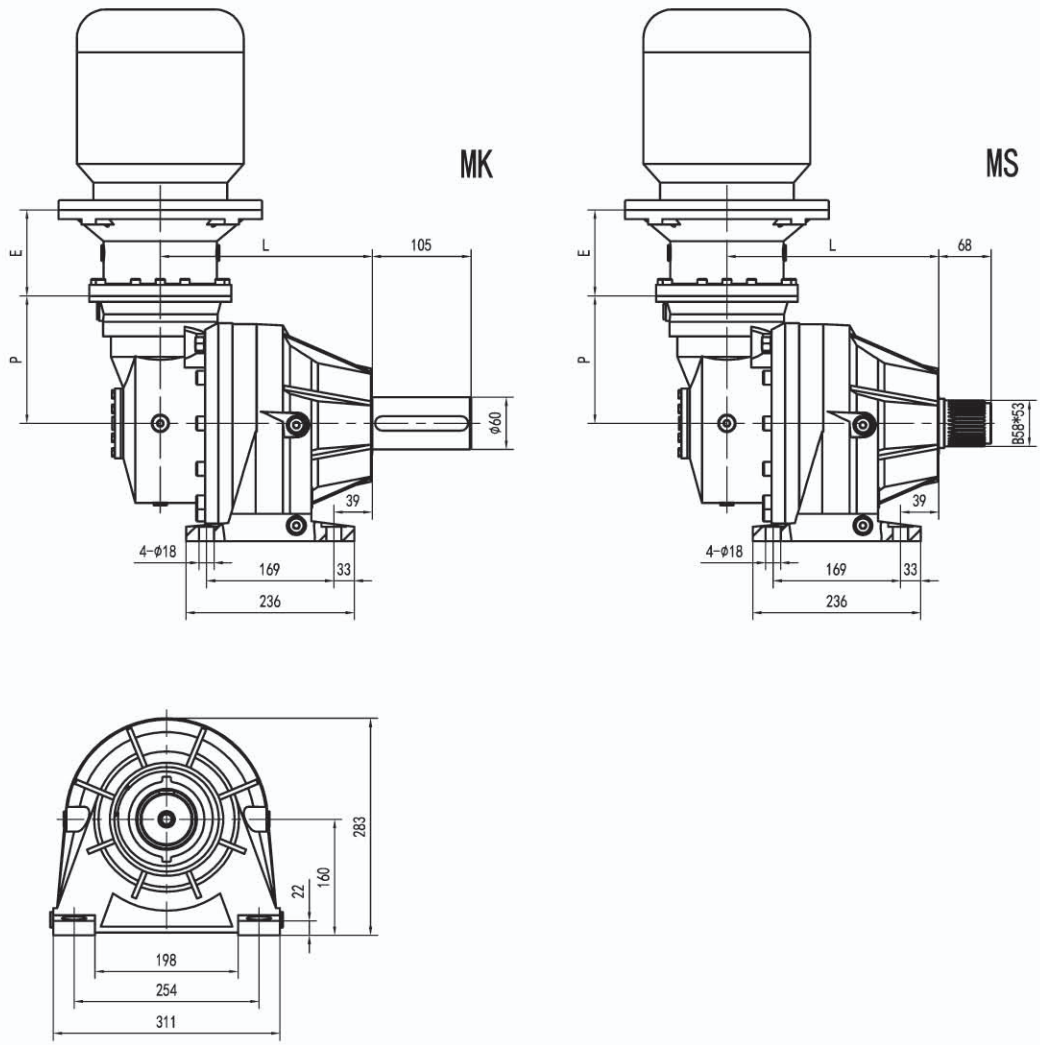

LP输出 LP VERSION	最大输出扭矩 MAX. TRANSMISSIBLE TORQUE	6000 Nm

	L				P	Kg				E					
	LS LK	LSH LP	HS HK	MK MS		LS LK	LSH LP	HS HK	MK MS	IEC 71	IEC 80	IEC 90	IEC 100	IEC 112	IEC 132
GTN03 R2	217	217	242	257	140	51	51	55	60	65	84	84	94	94	114
GTN03 R3	282	282	307	322	122	49	49	53	58	65	84	84	94	94	114
GTN03 R4	335	335	360	375	122	53	53	57	62	65	84	84	94	94	114

GTN04 R

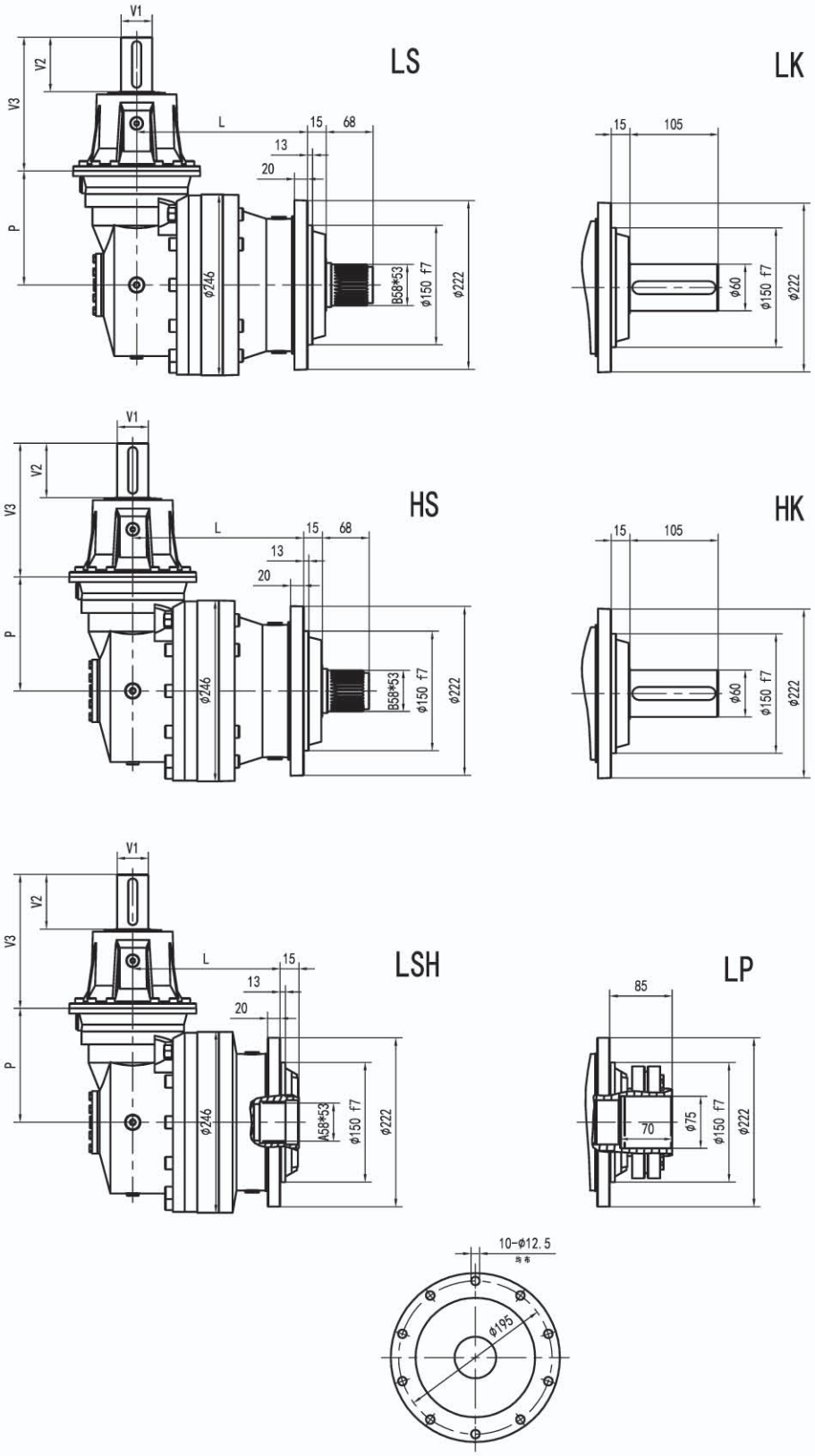
LS
LK
HS
HK
LSH
LP
V1
V2
V3
P
L
15
68
13
20
105
85
70
Φ246
B58*53
A58*53
Φ150 f7
Φ222
Φ60
Φ75
10-Φ12.5
均布
Φ195

GTN04 R

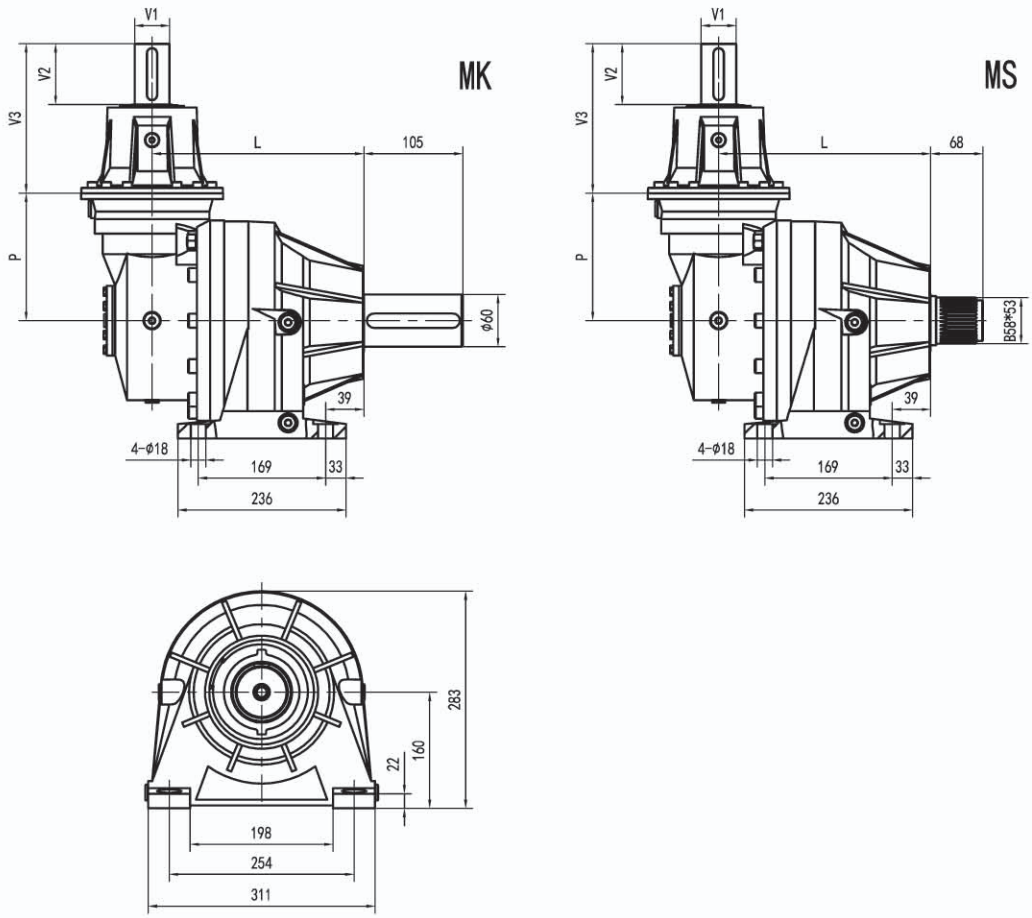

LP输出 LP VERSION	最大输出扭矩 MAX. TRANSMISSIBLE TORQUE	6000 Nm

	L				P	Kg				V1	V2	V3	Kg	V1	V2	V3	Kg
	LS LK	LSH LP	HS HK	MK MS		LS LK	LSH LP	HS HK	MK MS								
GTN03 R2	217	217	242	257	140	51	51	55	60	24	36	137.5	6	38	58	158	7
GTN03 R3	282	282	307	322	122	49	49	53	58	24	36	137.5	6	38	58	158	7
GTN03 R4	335	335	360	375	122	53	53	57	62	24	36	137.5	6	38	58	158	7

GTN04 L-GTN04 R

LK-HK

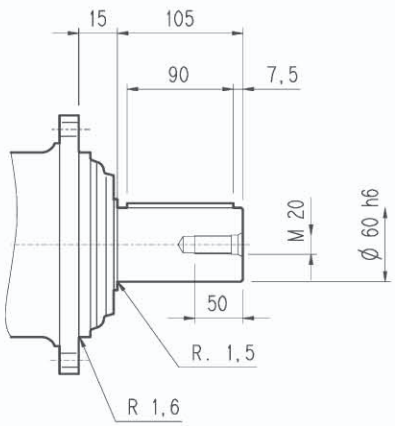

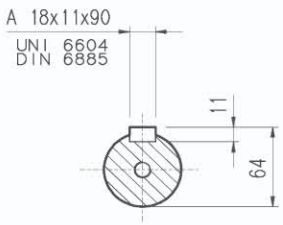

MK

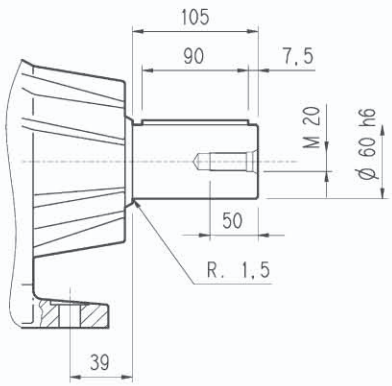

LS-HS

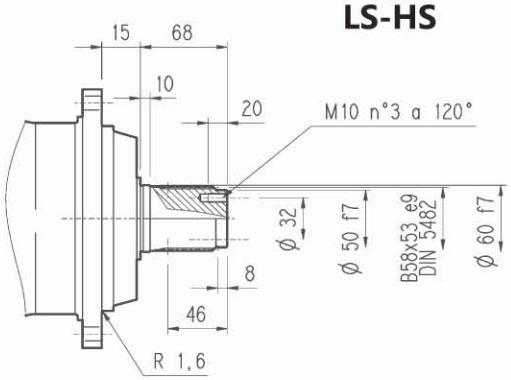

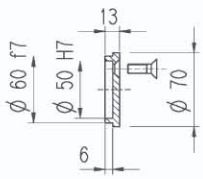

LSH

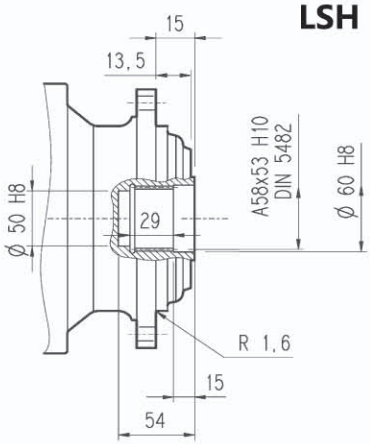

LP

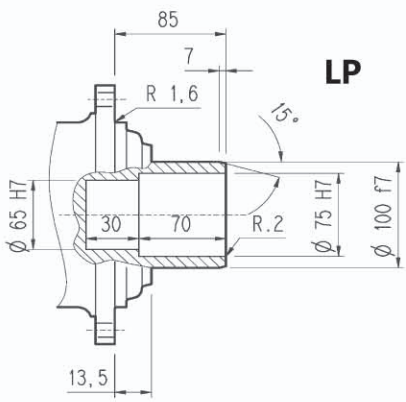

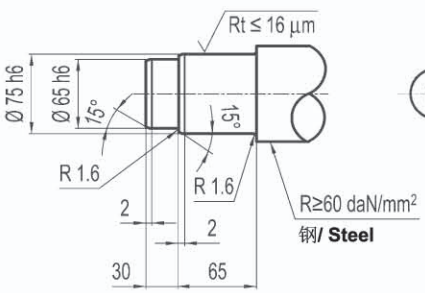

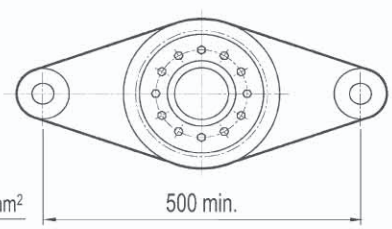

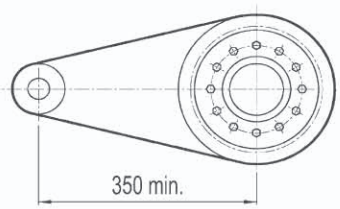

LP输出 LP VERSION	最大输出扭矩 MAX. TRANSMISSIBLE TORQUE	6000 Nm

GTN04 L-GTN04 R

法兰 / Flange

FOA



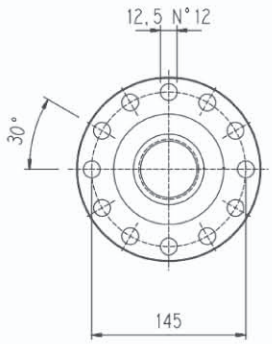

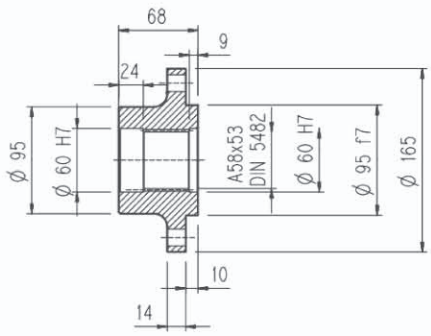

材料 : 钢 C40
Material : Steel C40

输出齿轮 / Output pinions

PM...



	m	z	x	dp	di	de	H	A	B	C	☆
PM501	5	19	0	95	82	104	77	12	9	72	□
PM502	5	19	0	95	82	104	68	0	0	0	□
PM503	5	20	0	100	87.5	110	68	18	0	0	■
PM504	5	22	0	110	97.5	120	68	18	0	0	■
PM601	6	14	0.500	84	75	99.6	68	0	0	0	□
PM602	6	18	0.500	108	99	123.6	68	0	0	0	□
PM603	6	20	0.833	120	115	140	68	0	0	0	□
PM801	8	13	0.675	104	95	127.6	68	0	0	0	■
PM802	8	14	0	112	92	126	68	0	0	0	■
PM803	8	14	0	112	92	126	80	0	12	72	■
PM804	8	15	0	120	100	136	68	0	0	0	□
PM805	8	22	0	176	156	190	77	12	10	71	□
PM1001	10	16	0.500	160	145	188	75	0	7	72	□

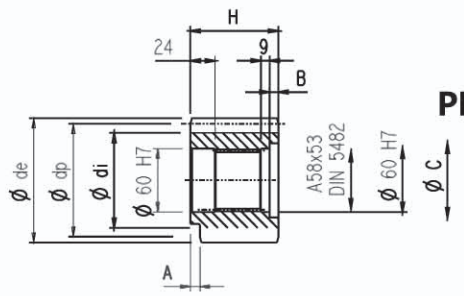

☆	材料 / Material
□	39NiCrMo3 调制钢 Steel 39NiCrMo3 hardened and tempered
■	18NiCrMo5 表面渗碳钢 18NiCrMo5 Case hardened

套筒联轴器i / Sleeve couplings

HOS



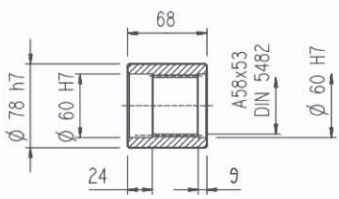

材料 : 16CrNi4
Material : Steel 16CrNi4

花键 / Splined bars

SOF



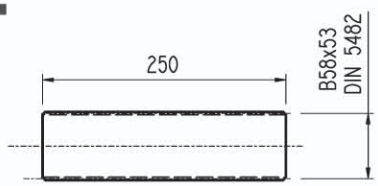

表面硬化钢 18NiCrMo5 UNI 5331 表面硬化必须达到 50-55 HRC
Case hardening steel 18NiCrMo5 UNI 5331
must be case hardened 50-55 HRC

锁紧盘 / Shrink disc

LOP



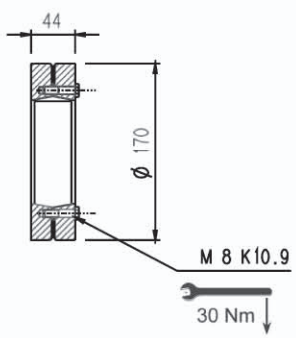

GTN04 L -GTN04R

输入轴 / Input shaft

S_ _

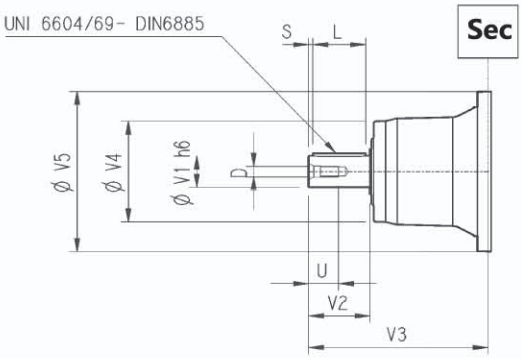

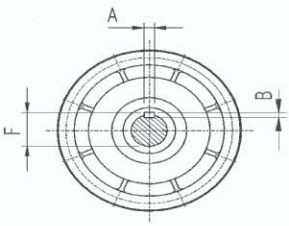

SV_ _

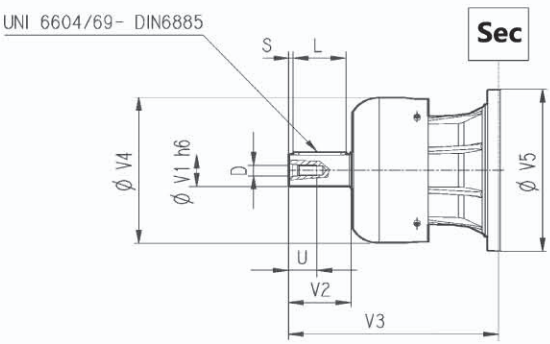

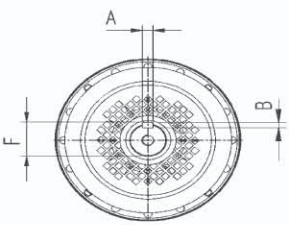

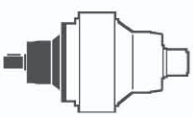

	CODE	V1	V2	V3	V4	V5	A	B	F	L	S	D	U
GTN04 L1	S05B	48	82	239	155	245	14	9	51.5	70	6	M16	36
	SV05B	48	82	276	219.5	244	14	9	51.5	70	6	M16	36
GTN04 L2	S01A	24	36	137.5	120	186	8	7	27	30	3	M8	19
	S01B	38	58	158	120	186	10	8	41	50	4	M12	28
GTN04 L3	S01A	24	36	137.5	120	186	8	7	27	30	3	M8	19
	S01B	38	58	158	120	186	10	8	41	50	4	M12	28
GTN04 L4	S01A	24	36	137.5	120	186	8	7	27	30	3	M8	19
	S01B	38	58	158	120	186	10	8	41	50	4	M12	28
GTN04 R2-R3-R4	S01A	24	36	137.5	120	186	8	7	27	30	3	M8	19
	S01B	38	58	158	120	186	10	8	41	50	4	M12	28

不带电机的输入法兰尺寸

Input dimension without motor adaptor

S_ _

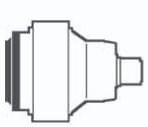

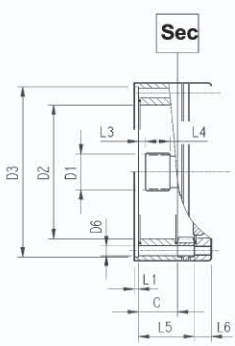

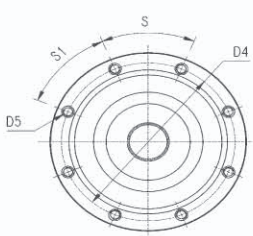

	CODE	D1	D2	D3	D4	D5	D6	L1	L2	L3	L4	L5	L6	S	S1	输入 Input
GTN04 L1	S9AA	40x36 DIN5482	140	178 H7	165	M10 n°8	11	4	/	9	18	/	18	45°	45°	A
GTN04 L2	S9AA	40x36 DIN5482	140	178 H7	165	M10 n°8	11	4	/	9	18	53	18	45°	45°	A
GTN04 L3	S9AA	40x36 DIN5482	140	178 H7	165	M10 n°8	11	4	/	9	18	106	18	45°	45°	A
GTN04 L4	S9AA	40x36 DIN5482	140	178 H7	165	M10 n°8	11	4	/	9	18	159	18	45°	45°	A
GTN04 R2-R3-R4	S9AA	40x36 DIN5482	140	178 H7	165	M10 n°8	11	4	/	9	18	37	18	45°	45°	A

GTN04 L -GTN04R

输出轴上允许的径向和轴向载荷
$Fh_2 : n_2 . h = 10000$

Permissible radial and axial loadson output shaft with Fh_2
$n_2 \cdot h = 10000$

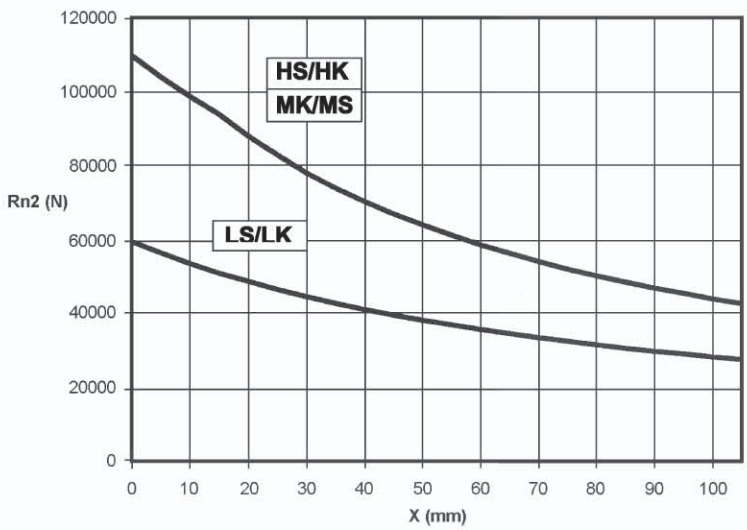

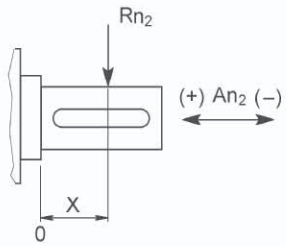

	An2 (+)	An2 (-)
LS - LK	55000	44000
HS - HK - MK - MS	55000	44000

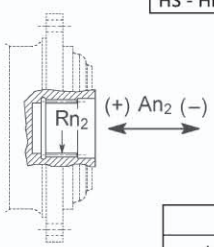

	Rn2	An2 (+/-)
LSH	24000	25000

轴上的载荷修正系数 fh_2 Load corrective factor fh_2 on shafts	$Fh_2 = n_2 \cdot h$		10000	25000	50000	100000	500000	1000000
	fh_2	LS - LK - LSH	1	0.74	0.58	0.46	0.27	0.21
		HS - HK - MK- MS	1	0.76	0.61	0.50	0.31	0.25

输入轴上允许的径向和轴向载荷
$Fh_1 n_1 . h = 250000$

Permissible radial loads on inputshaft with $Fh_1 : n_1 \cdot h = 250000$

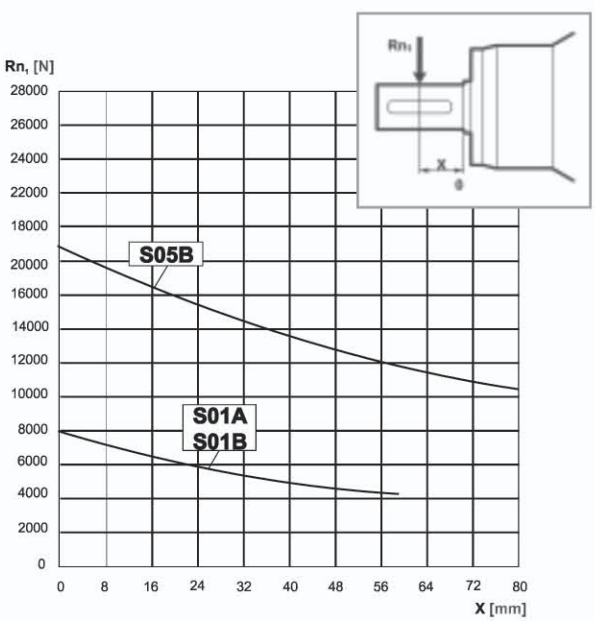

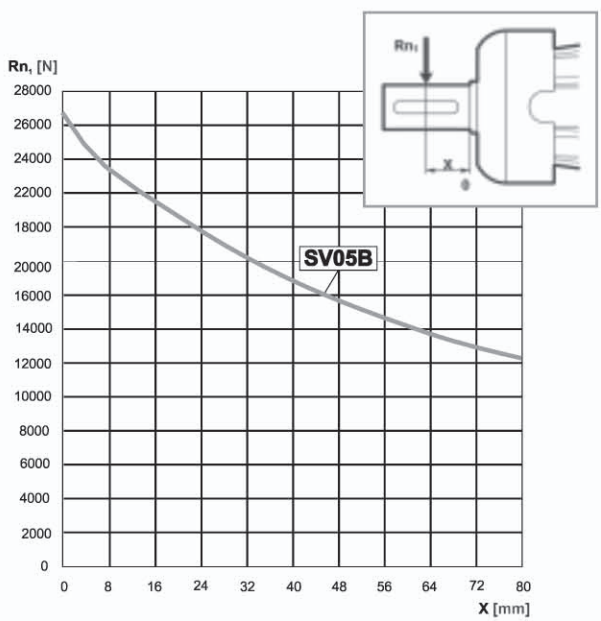

轴上的载荷修正系数 fh_1 Load corrective factor fh_1 on shafts	$Fh_1 = n_1 \cdot h$	250000	500000	1000000	2000000	5000000	10000000
	fh_1	1	0.79	0.63	0.50	0.37	0.29

GTN05 L

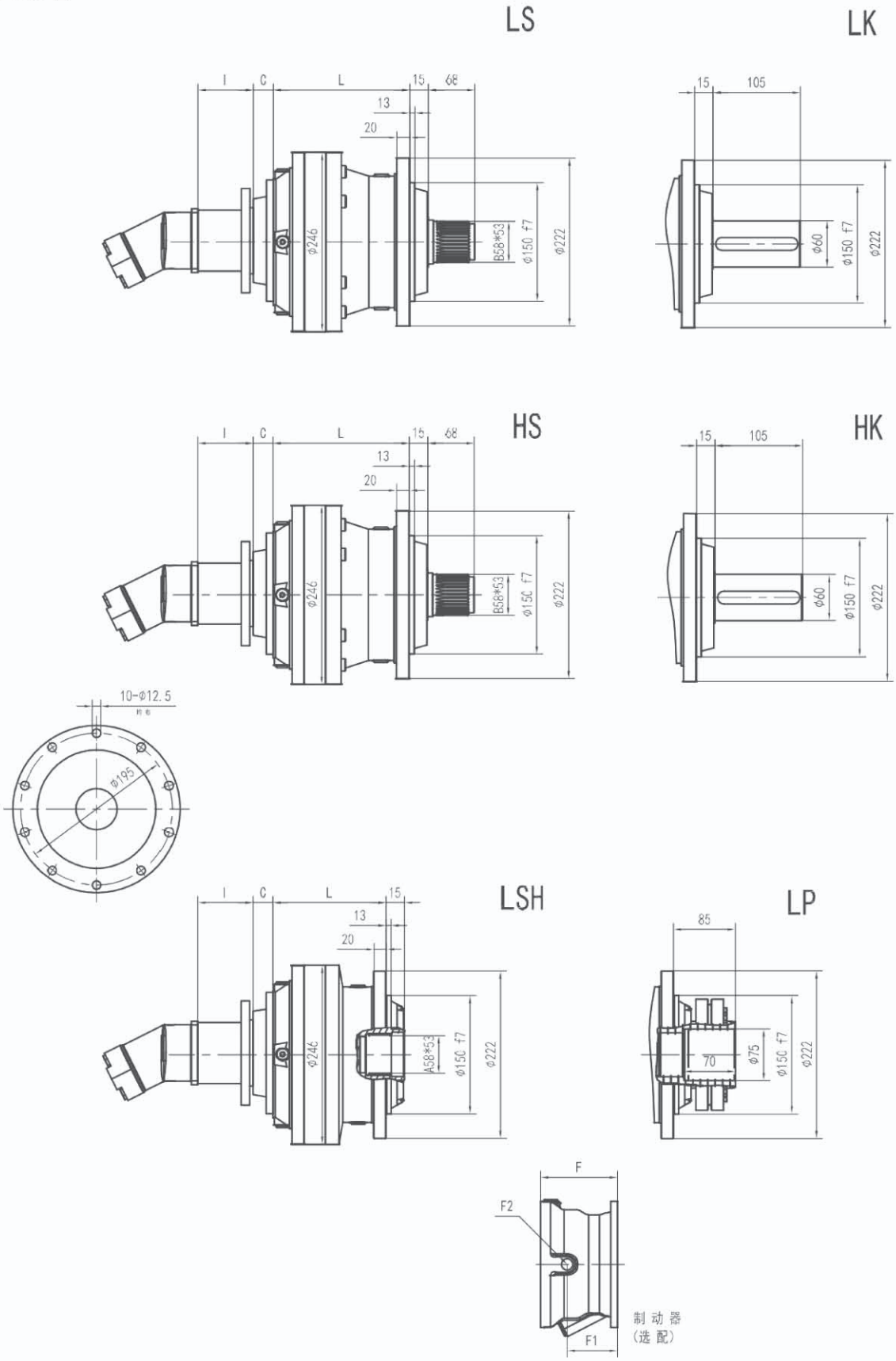
LS
LK
HS
HK
LSH
LP
I
C
L
15
68
13
20
105
85
70
Φ246
B58*53
Φ150 f7
Φ222
Φ60
Φ75
10-Φ12.5
Φ195
F
F2
F1
制动器
(选配)

GTN05 L

MK

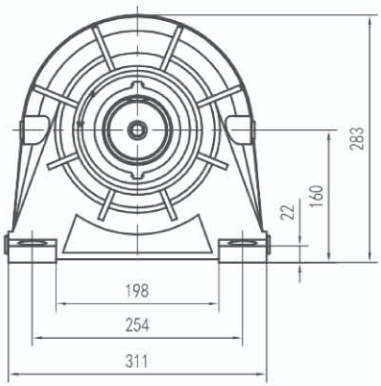

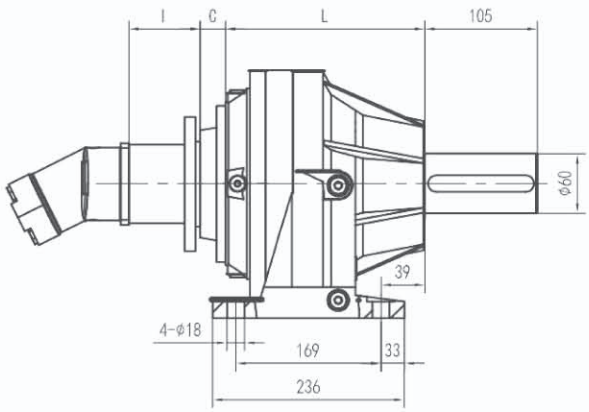

MS

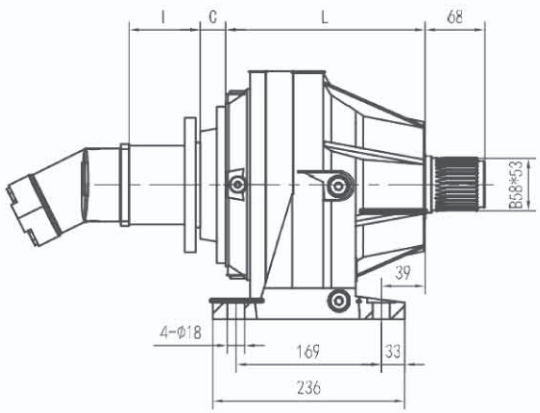

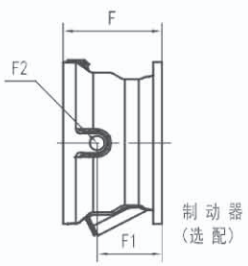

LP 输出 LP VERSION	最大输出扭矩 MAX. TRANSMISSIBLE TORQUE	7000 Nm

	L				Kg												
	LS LK	LSH LP	HS HK	MK MS	LS LK	LSH LP	HS HK	MK MS	C	输入 Input	I	F	F1	F2	类型 Type	输入 Input	Kg
GTN05 L1	143	143	168	183	36	36	40	45	37	A	联系厂家	145	95	1/4 G	5	A	16
GTN05 L2	208	208	233	248	43	43	47	52	37	A		105	65	1/4 G	4	A	10
GTN05 L3	261	261	286	301	47	47	51	56	37	A		105	65	1/4 G	4	A	10
GTN05 L4	314	314	339	354	51	51	55	60	37	A		105	65	1/4 G	4	A	10

GTN05 L

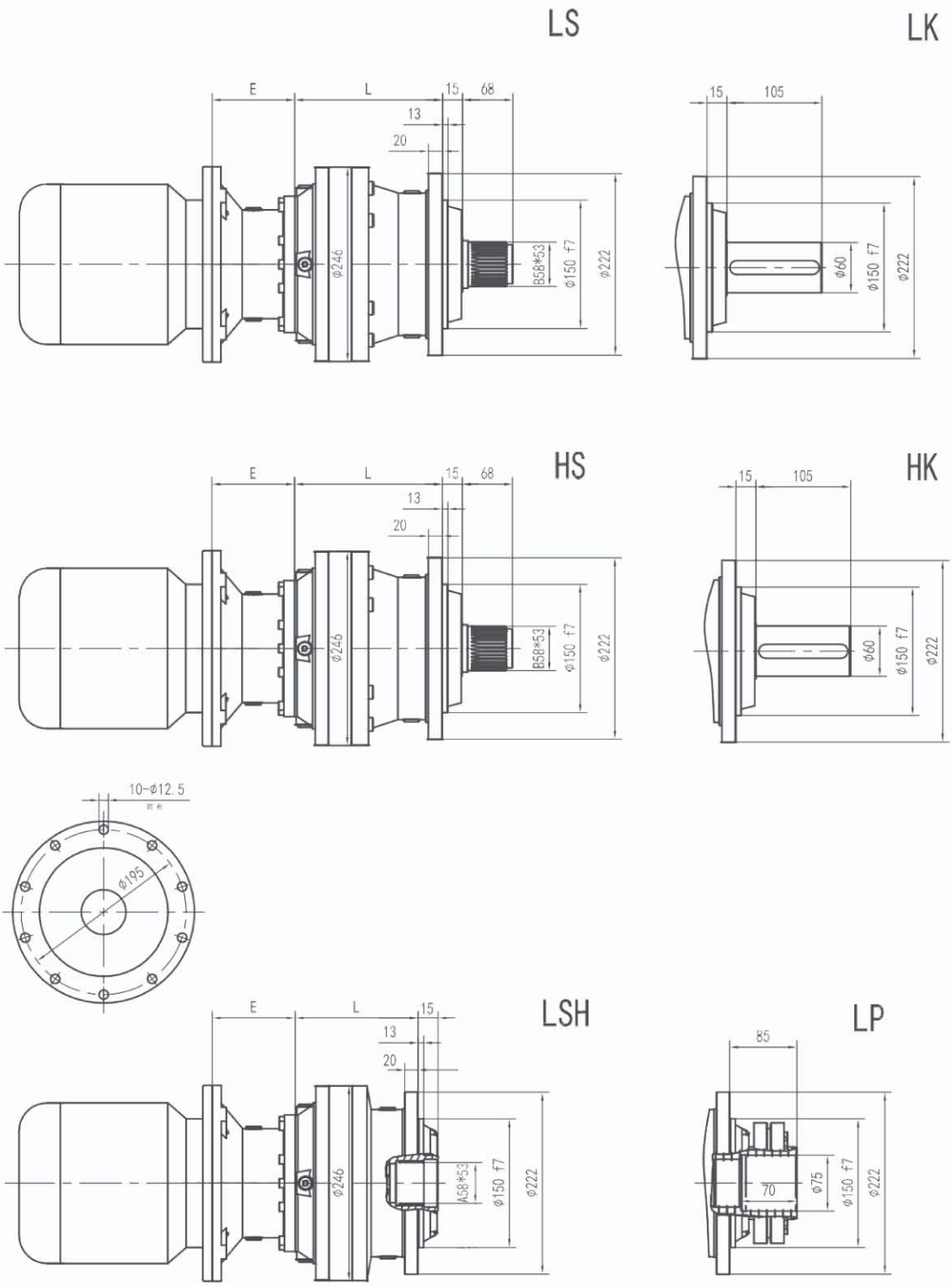
LS
LK
HS
HK
LSH
LP
E
L
15
68
13
20
105
85
70
Φ246
Φ222
Φ150 f7
Φ60
Φ75
B58*53
A58*53
10-Φ12.5
Φ195

GTN05 L

MK

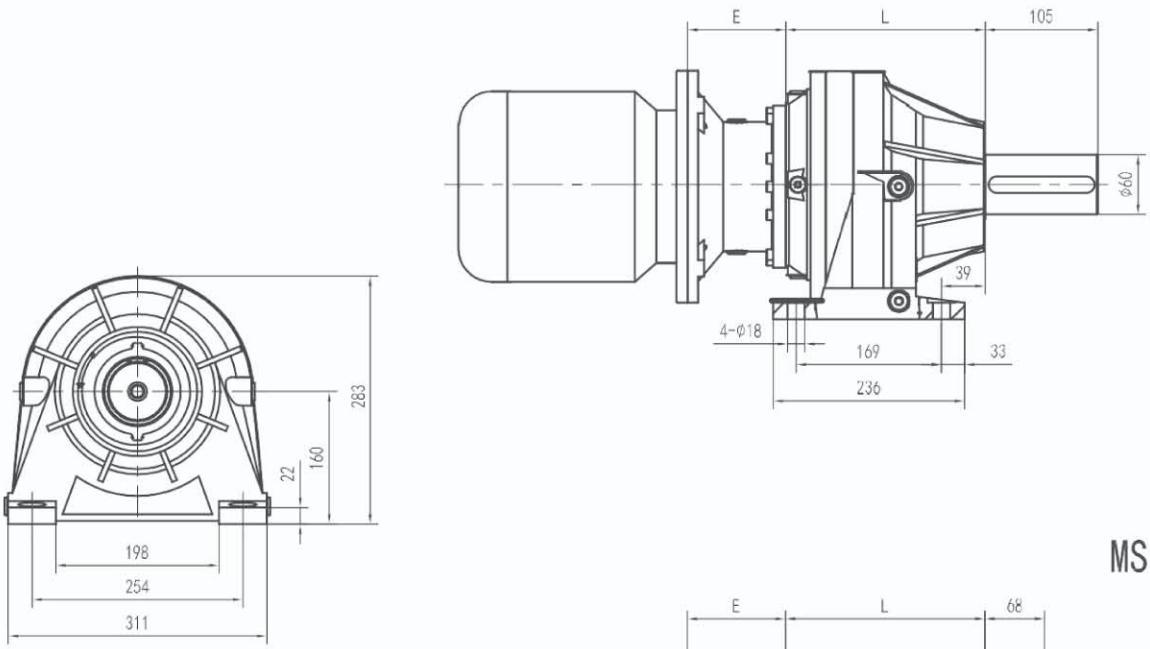

MS

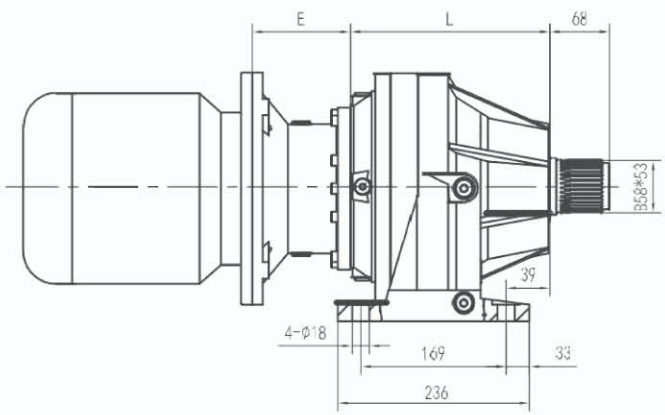

LP 输出 LP VERSION	最大输出扭矩 MAX. TRANSMISSIBLE TORQUE	7000 Nm

	L				Kg				E								
	LS LK	LSH LP	HS HK	MK MS	LS LK	LSH LP	HS HK	MK MS	IEC 71	IEC 80	IEC 90	IEC 100	IEC 112	IEC 132	IEC 160	IEC 180	IEC 200
GTN05 L1	143	143	168	183	36	36	40	45						114	144	144	174
GTN05 L2	208	208	233	248	43	43	47	52	65	84	84	94	94	114	144		
GTN05 L3	261	261	286	301	47	47	51	56	65	84	84	94	94	114	144		
GTN05 L4	314	314	339	354	51	51	55	60	65	84	84	94	94	114	144		

GTN05 L

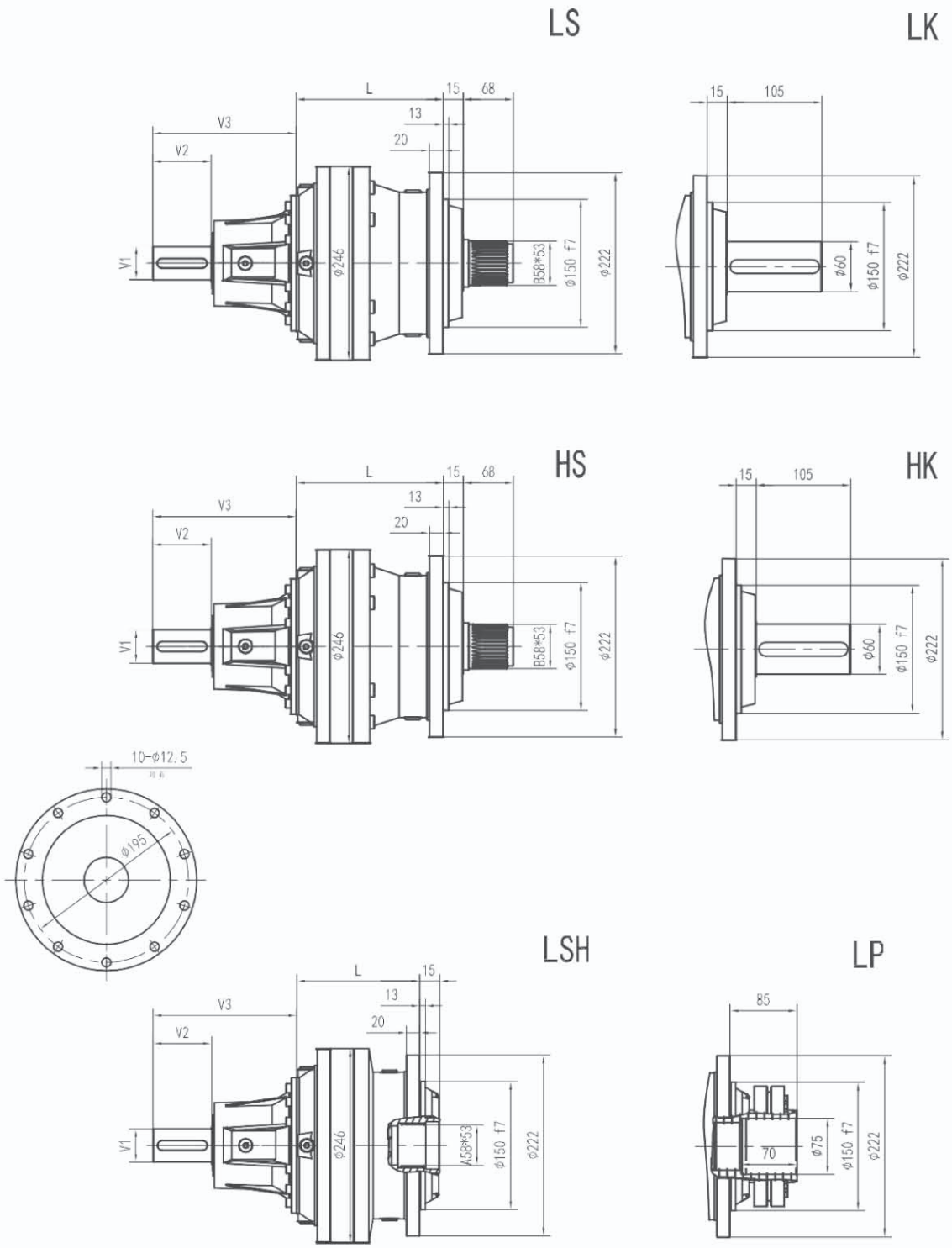
LS
LK
HS
HK
LSH
LP
L
15
68
13
20
V3
V2
V1
φ246
B58*53
φ150 f7
φ222
105
φ60
10-φ12.5
φ195
85
70
φ75
A58*53

GTN05 L

MK

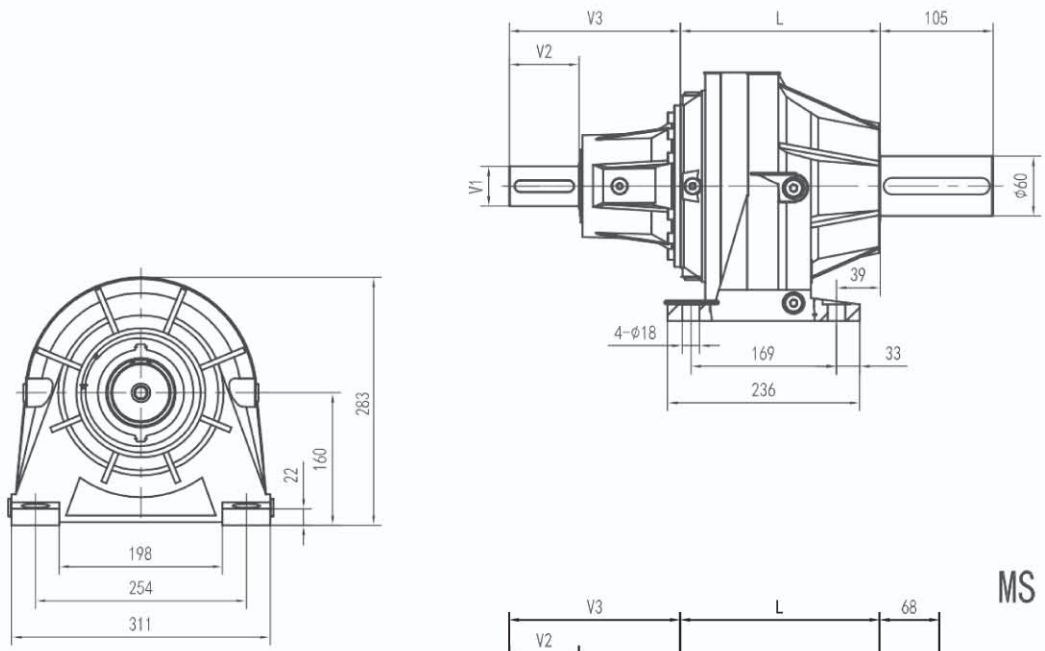

MS

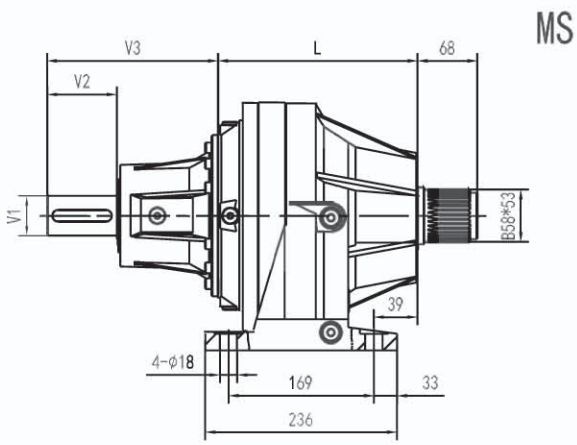

LP 输出 LP VERSION	最大输出扭矩 MAX. TRANSMISSIBLE TORQUE	7000 Nm

	L				Kg				V1	V2	V3	Kg	V1	V2	V3	Kg
	LS LK	LSH LP	HS HK	MK MS	LS LK	LSH LP	HS HK	MK MS								
GTN05 L1	143	143	168	183	36	36	40	45	48	82	239	15				
GTN05 L2	208	208	233	248	43	43	47	52	24	36	137.5	6	38	58	158	7
GTN05 L3	261	261	286	301	47	47	51	56	24	36	137.5	6	38	58	158	7
GTN05 L4	314	314	339	354	51	51	55	60	24	36	137.5	6	38	58	158	7

GTN05 R

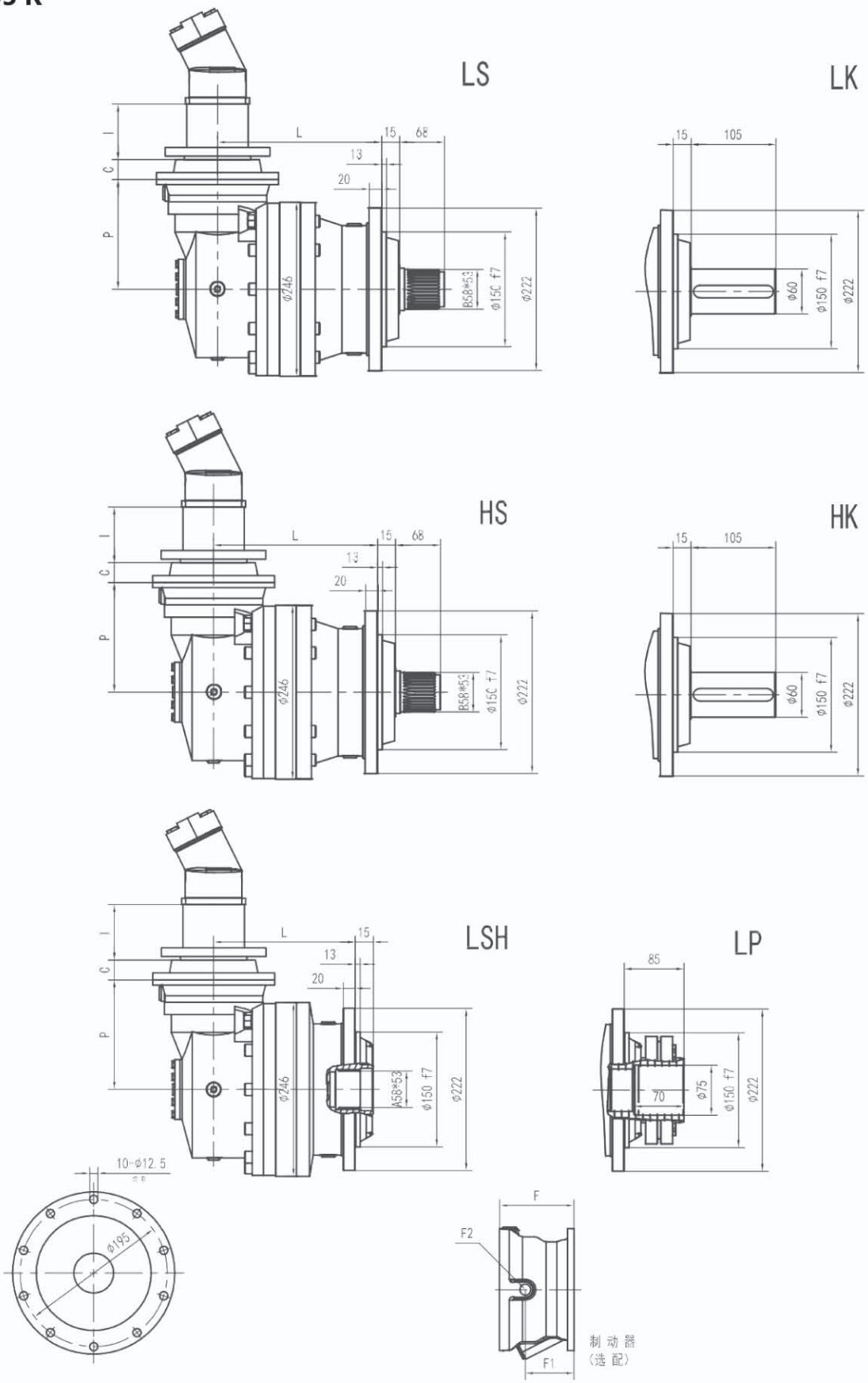
LS
LK
HS
HK
LSH
LP
L
15
68
13
20
I
C
P
Φ246
B58*53
Φ150 f7
Φ222
105
Φ60
85
70
Φ75
A58*53
10-Φ12.5
Φ195
F
F2
F1
制 动 器
（选 配）

GTN05 R

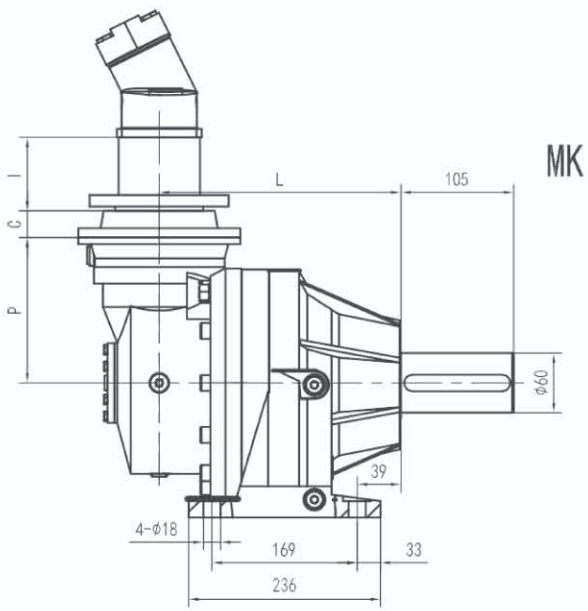

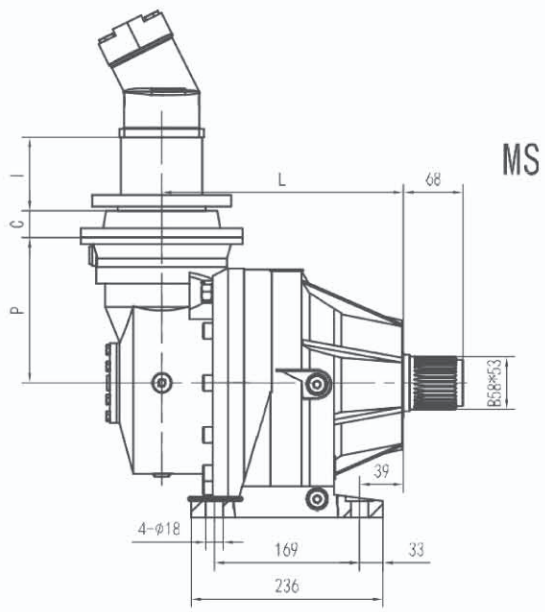

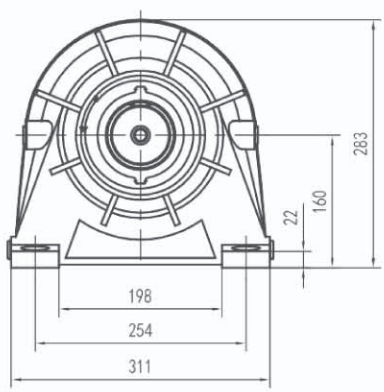

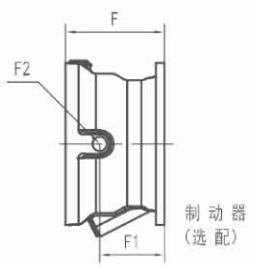

LP 输出 LP VERSION	最大输出扭矩 MAX. TRANSMISSIBLE TORQUE	7000 Nm

	L				P	Kg				C	输入 Input	I	F	F1	F2	类型 Type	输入 Input	Kg
	LS LK	LSH LP	HS HK	MK MS		LS LK	LSH LP	HS HK	MK MS									
GTN05 R2	235	235	260	275	140	56	56	60	65	37	A	联系厂家	105	65	1/4 G	4	A	10
GTN05 R3	300	300	325	340	122	57	57	61	66	37	A		105	65	1/4 G	4	A	10
GTN05 R4	353	353	378	393	122	61	61	65	70	37	A		105	65	1/4 G	4	A	10

GTN05 R

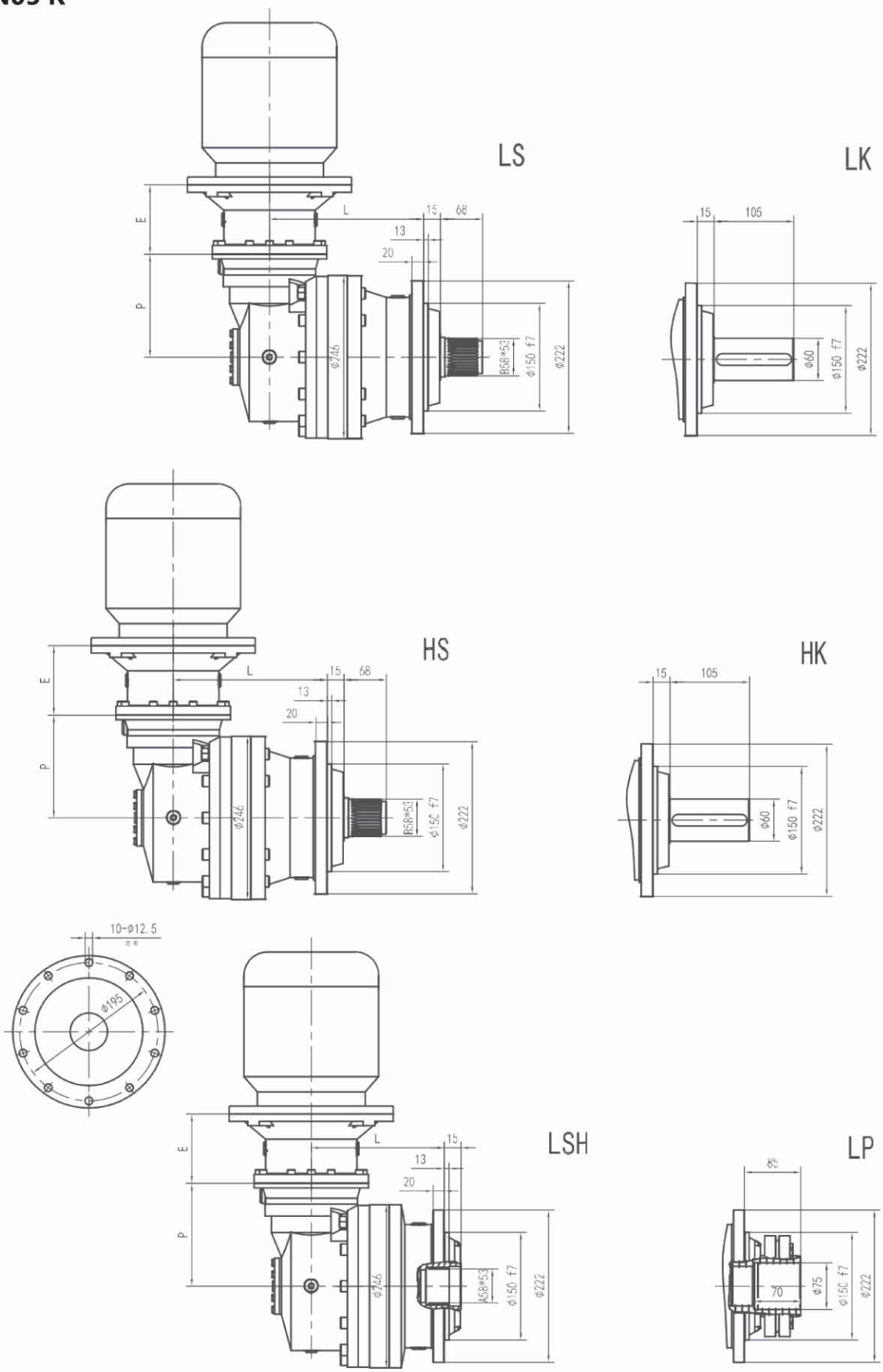
LS
LK
HS
HK
LSH
LP
E
P
L
15
68
13
20
105
Φ246
B58*53
Φ150 f7
Φ222
Φ60
10-Φ12.5
Φ195
A58*53
85
70
Φ75

GTN05 R

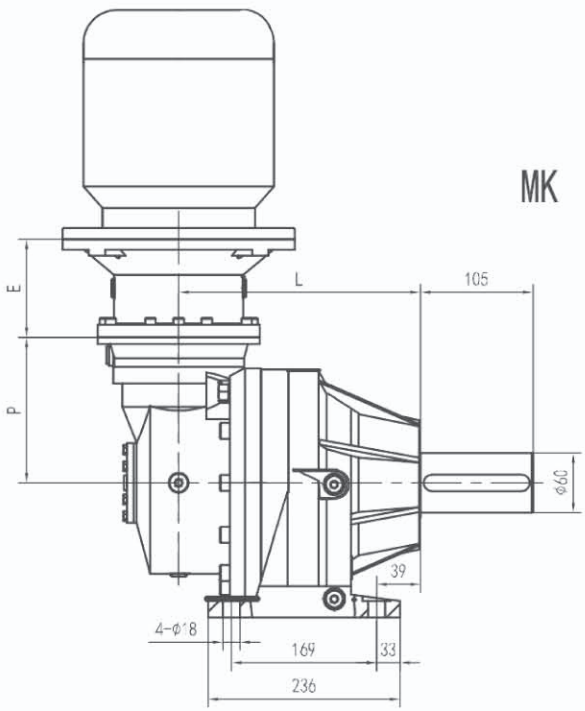

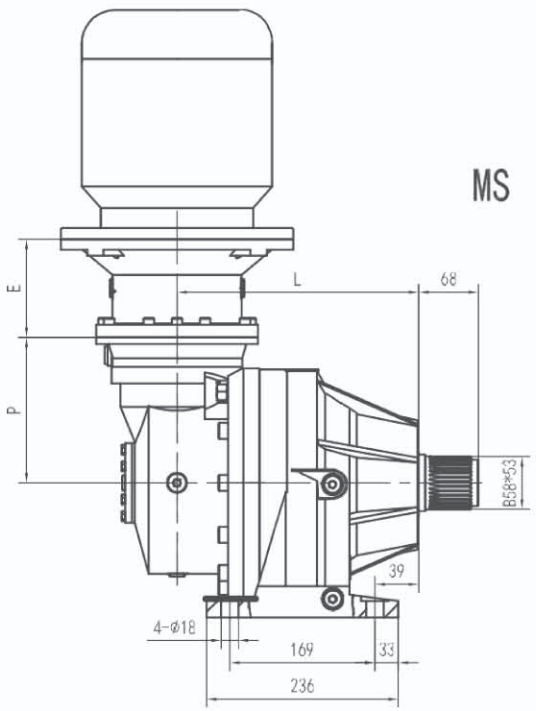

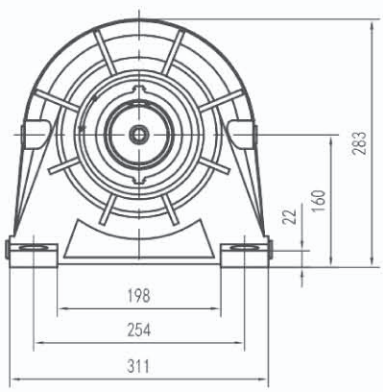

LP 输出 LP VERSION	最大输出扭矩 MAX. TRANSMISSIBLE TORQUE	7000 Nm

	L				P	Kg				E					
	LS LK	LSH LP	HS HK	MK MS		LS LK	LSH LP	HS HK	MK MS	IEC 71	IEC 80	IEC 90	IEC 100	IEC 112	IEC 132
GTN05 R2	235	235	260	275	140	56	56	60	65	65	84	84	94	94	114
GTN05 R3	300	300	325	340	122	57	57	61	66	65	84	84	94	94	114
GTN05 R4	353	353	378	393	122	61	61	65	70	65	84	84	94	94	114

GTN05 R

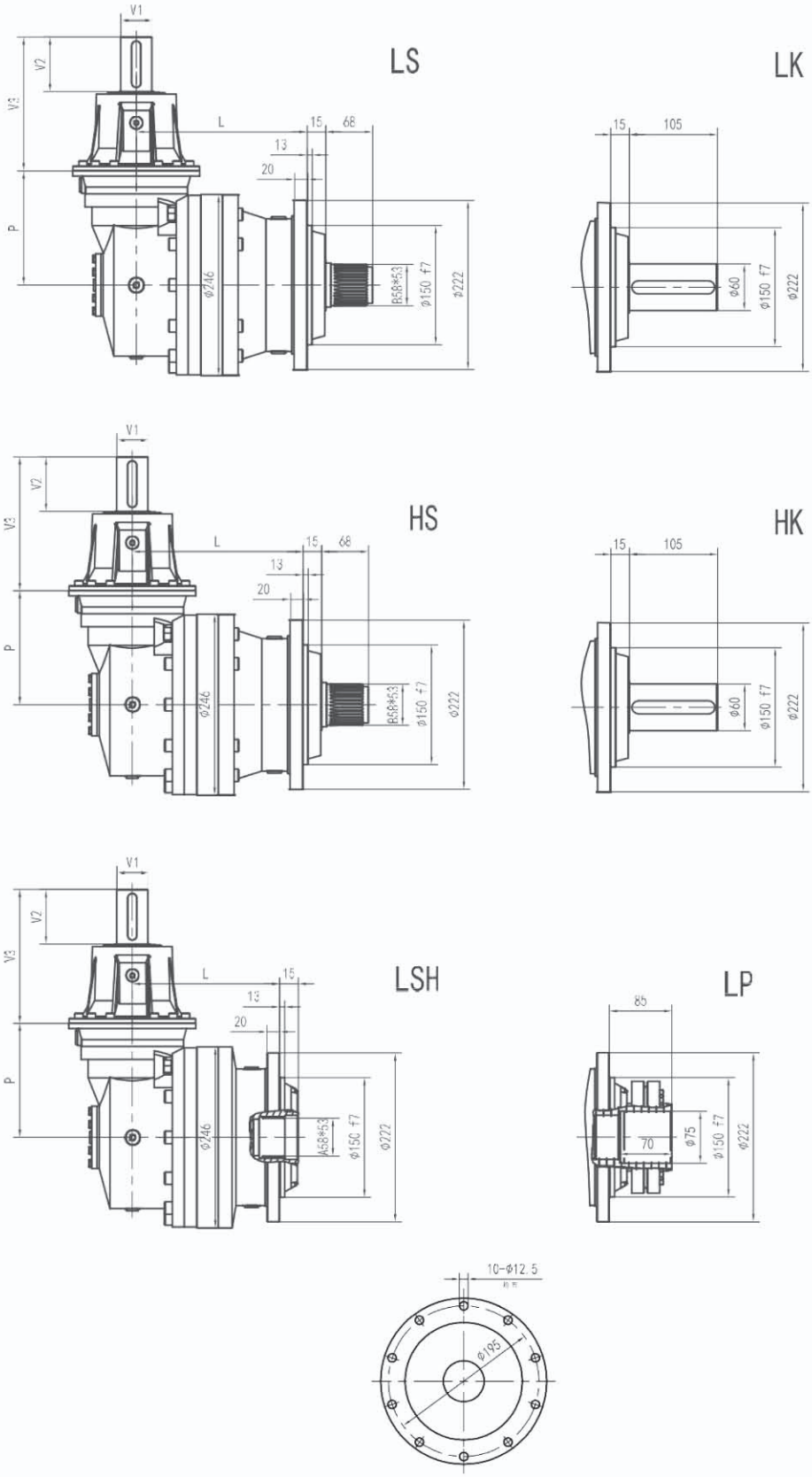
LS
LK
HS
HK
LSH
LP
V1
V2
V3
P
L
15
68
13
20
Φ246
B58*53
Φ150 f7
Φ222
105
Φ60
85
70
Φ75
10-Φ12.5
Φ195

GTN05 R

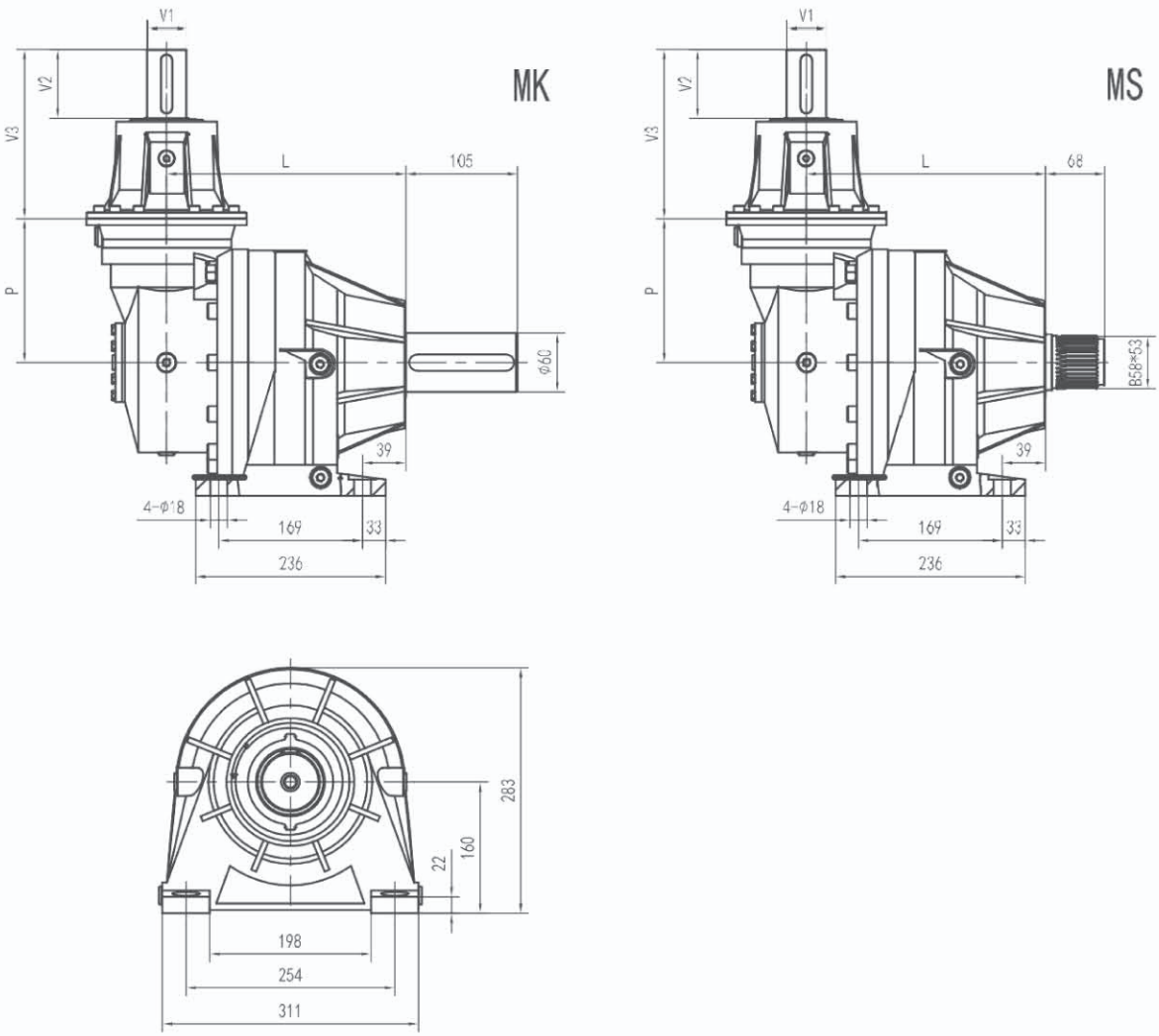

LP 输出 LP VERSION	最大输出扭矩 MAX. TRANSMISSIBLE TORQUE	7000 Nm

	L				P	Kg				V1	V2	V3	Kg	V1	V2	V3	Kg
	LS LK	LSH LP	HS HK	MK MS		LS LK	LSH LP	HS HK	MK MS								
GTN05 R2	235	235	260	275	140	56	56	60	65	24	36	137.5	6	38	58	158	7
GTN05 R3	300	300	325	340	122	57	57	61	66	24	36	137.5	6	38	58	158	7
GTN05 R4	353	353	378	393	122	61	61	65	70	24	36	137.5	6	38	58	158	7

GTN05 L-GTN05 R

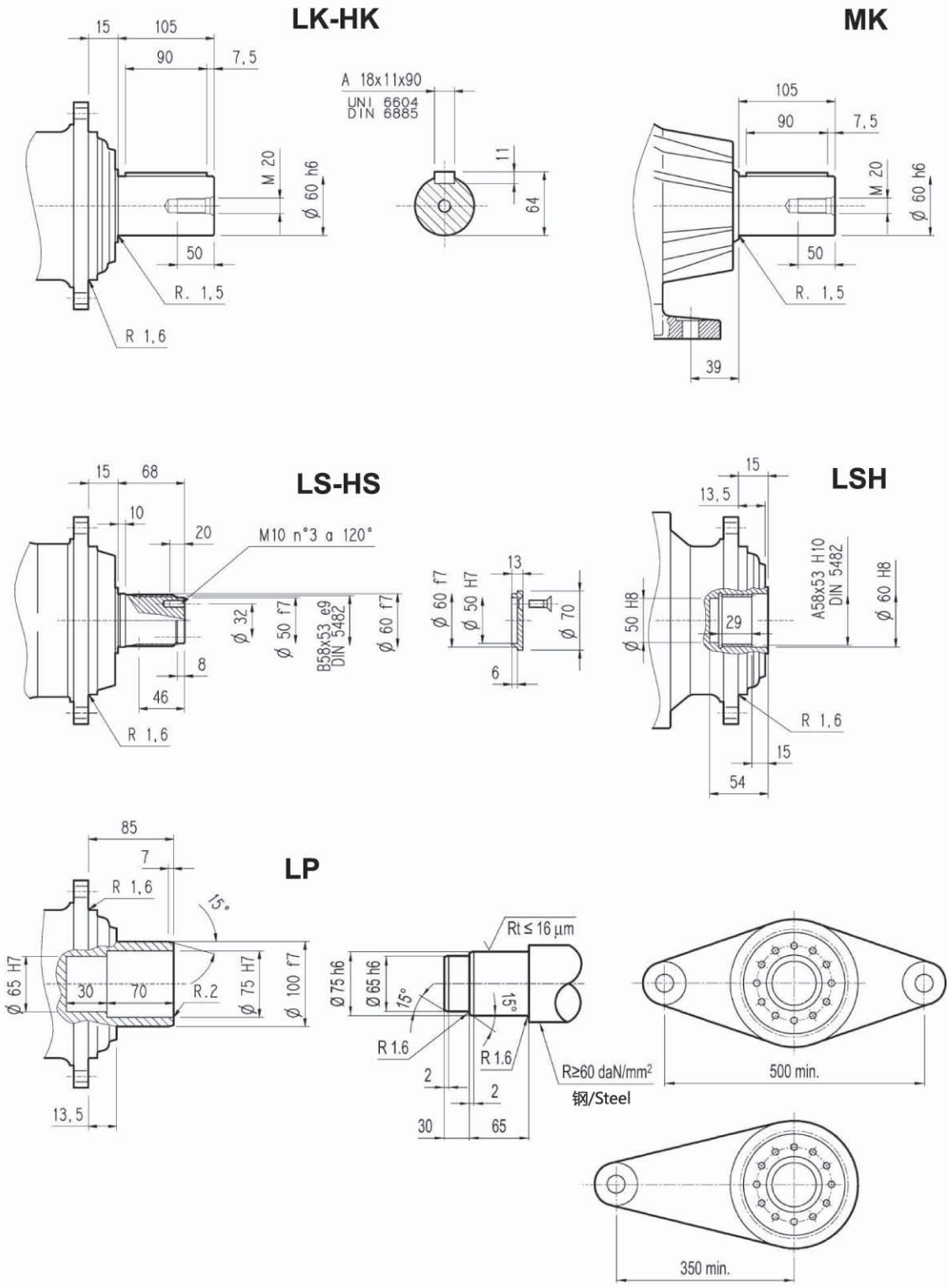

LP 输出 LP VERSION	最大输出扭矩 MAX. TRANSMISSIBLE TORQUE	7000 Nm

GTN05 L - GTN05 R

FOA

法兰/Flange



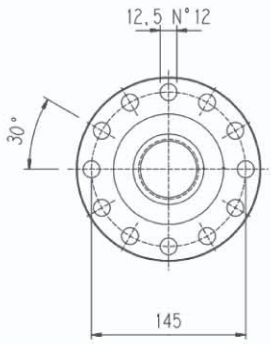

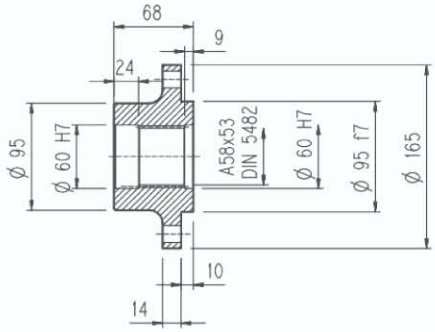

材料：C40
Material ：Steel C40

输出齿轮/Output pinions



PM...

代号 Code	m	z	x	dp	di	de	H	A	B	C	☆
PM501	5	19	0	95	82	104	77	12	9	72	□
PM502	5	19	0	95	82	104	68	0	0	0	□
PM503	5	20	0	100	87.5	110	68	18	0	0	■
PM504	5	22	0	110	97.5	120	68	18	0	0	■
PM601	6	14	0.500	84	75	99.6	68	0	0	0	□
PM602	6	18	0.500	108	99	123.6	68	0	0	0	□
PM603	6	20	0.833	120	115	140	68	0	0	0	□
PM801	8	13	0.675	104	95	127.6	68	0	0	0	■
PM802	8	14	0	112	92	126	68	0	0	0	■
PM803	8	14	0	112	92	126	80	0	12	72	■
PM804	8	15	0	120	100	136	68	0	0	0	□
PM805	8	22	0	176	156	190	77	12	10	71	□
PM1001	10	16	0.500	160	145	188	75	0	7	72	□

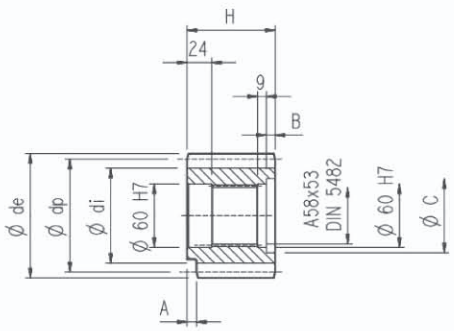

☆	材料 / Material
□	39NiCrMo3 调制钢 Steel 39NiCrMo3 hardened and tempered
■	18NiCrMo5 表面渗碳钢 18NiCrMo5 Case hardened

套筒联轴器/Sleeve couplings



HOS

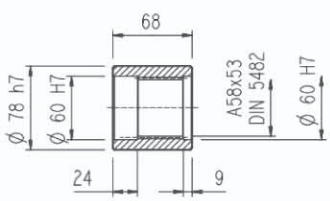

材料：16CrNi4
Material ：Steel 16CrNi4

花键棒料/Splined bars



SOF

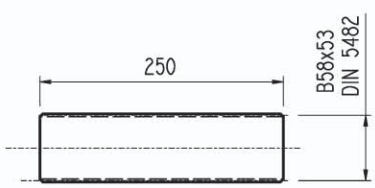

表面硬化钢18NiCrMo5 NUI5331,表面必须硬化50-55HRC
Case hardening steel 18NiCrMo5 UNI
5331 must be case hardened 50-55 HRC

锁紧盘/Shrink disc



LOP

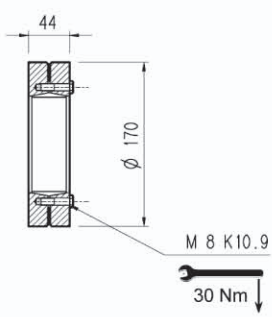

GTN05 L - GTN05 R

输入轴/Input shaft

S _ _

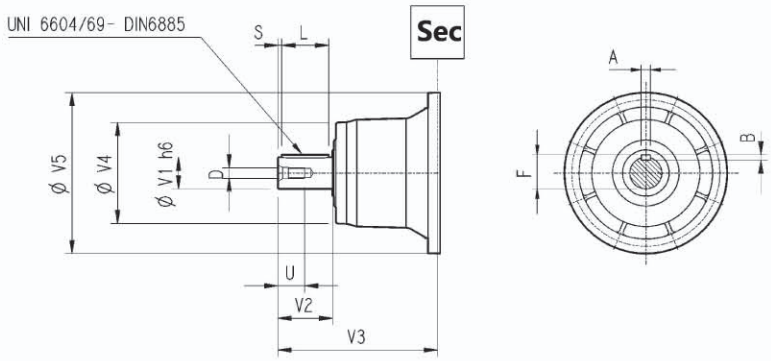

SV_ _

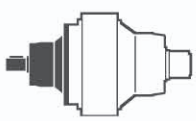

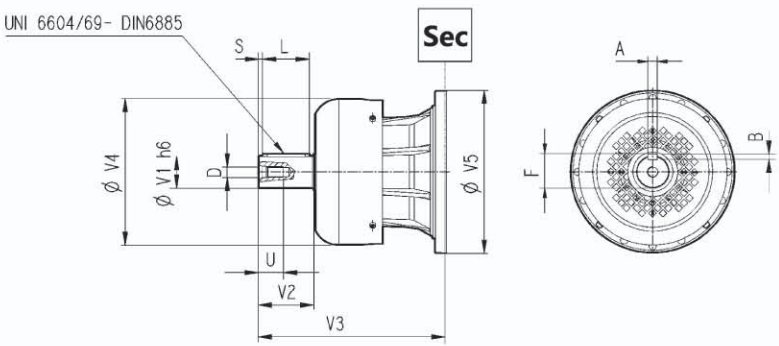

	CODE	V1	V2	V3	V4	V5	A	B	F	L	S	D	U
GTN05 L1	S05B	48	82	239	155	245	14	9	51.5	70	6	M16	36
	SV05B	48	82	276	219.5	244	14	9	51.5	70	6	M16	36
GTN05 L2	S01A	24	36	137.5	120	186	8	7	27	30	3	M8	19
	S01B	38	58	158	120	186	10	8	41	50	4	M12	28
GTN05 L3	S01A	24	36	137.5	120	186	8	7	27	30	3	M8	19
	S01B	38	58	158	120	186	10	8	41	50	4	M12	28
GTN05 L4	S01A	24	36	137.5	120	186	8	7	27	30	3	M8	19
	S01B	38	58	158	120	186	10	8	41	50	4	M12	28
GTN 05 R2-R3-R4	S01A	24	36	137.5	120	186	8	7	27	30	3	M8	19
	S01B	38	58	158	120	186	10	8	41	50	4	M12	28

无电机适配器输入尺寸
Input dimension without motor adaptor

S _ _

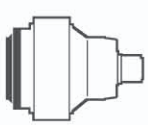

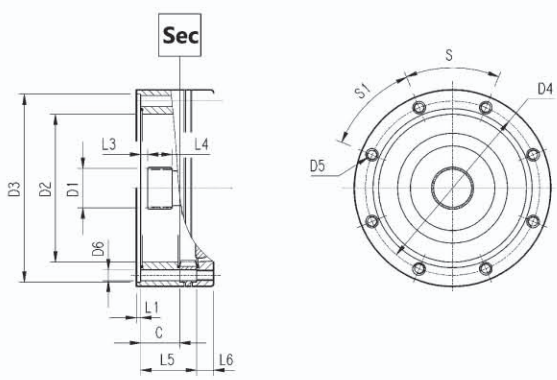

	CODE	C	D1	D2	D3	D4	D5	D6	L1	L2	L3	L4	L5	L6	S	S1	输入 Input
GTN05 L1	S9AA	37	40x36 DIN5482	140	178 H7	165	M10 n°8	11	4	/	9	18	/	18	45°	45°	A
GTN05 L2	S9AA	37	40x36 DIN5482	140	178 H7	165	M10 n°8	11	4	/	9	18	65	18	45°	45°	A
GTN05 L3	S9AA	37	40x36 DIN5482	140	178 H7	165	M10 n°8	11	4	/	9	18	118	18	45°	45°	A
GTN05 L4	S9AA	37	40x36 DIN5482	140	178 H7	165	M10 n°8	11	4	/	9	18	171	18	45°	45°	A
GTN05 R2-R3-R4	S9AA	37	40x36 DIN5482	140	178 H7	165	M10 n°8	11	4	/	9	18	37	18	45°	45°	A

GTN05 L - GTN05 R

Fh_2输出轴允许的径向和轴向载荷
$n_2 \cdot h$ =10000

Permissible radial and axial loadson output shaft with Fh_2
$n_2 \cdot h$ =10000

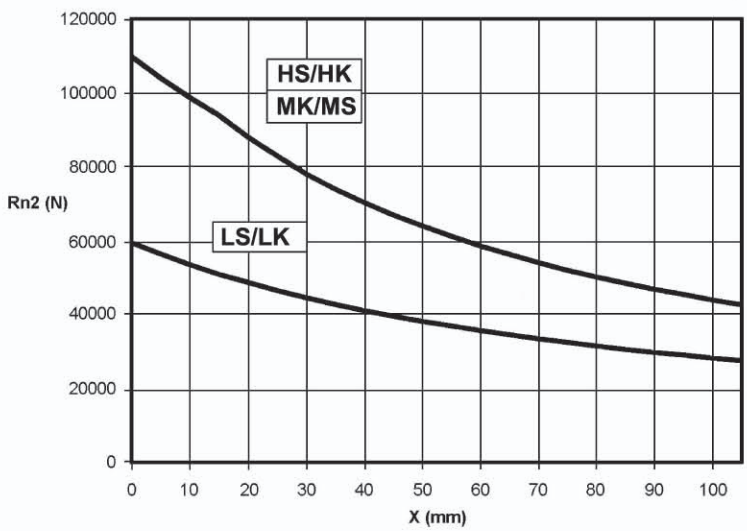

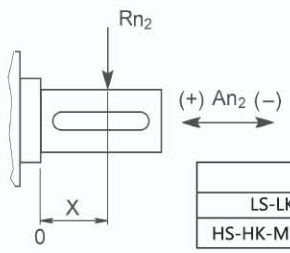

	An2 (+)	An2 (-)
LS-LK	55000	44000
HS-HK-MK-MS	55000	44000

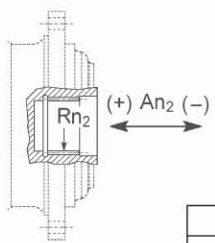

	Rn2	An2 (+/-)
LSH	24000	25000

轴上的载荷修正系数 fh_2 Load corrective factor fh_2 on shafts	$Fh_2 = n_2 \cdot h$		10000	25000	50000	100000	500000	1000000
	fh_2	LS- LK- LSH	1	0.74	0.58	0.46	0.27	0.21
		HS- HK- MK- MS	1	0.76	0.61	0.50	0.31	0.25

Fh_1输入轴允许的径向和轴向载荷
$n_1 \cdot h$ =250000

Permissible radial loads on inputshaft with Fh_1 : $n_1 \cdot h$ =250000

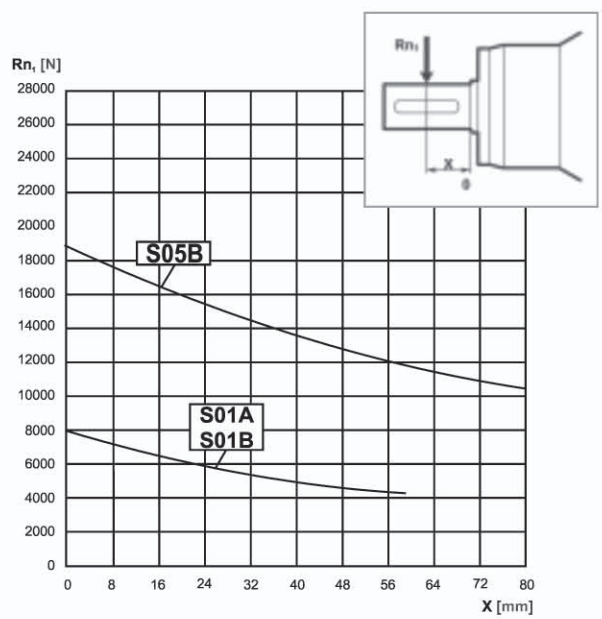

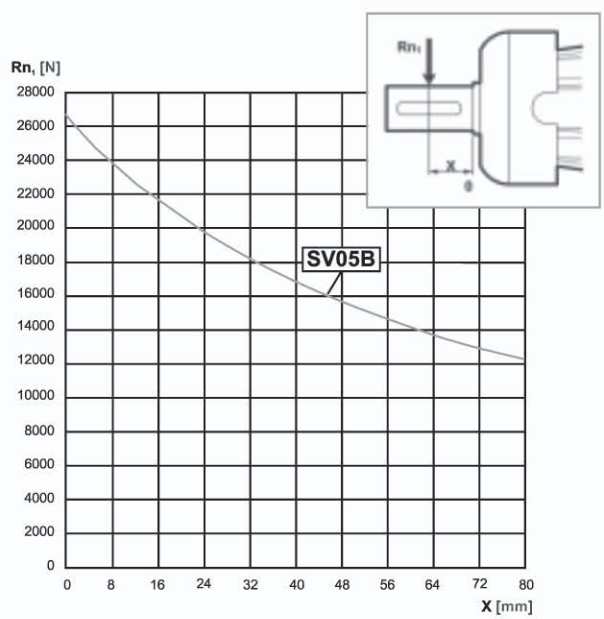

轴上的载荷修正系数fh_1 Load corrective factor fh_1 on shafts	$Fh_1 = n_1 \cdot h$	250000	500000	1000000	2000000	5000000	10000000
	fh_1	1	0.79	0.63	0.50	0.37	0.29

GTN06 L

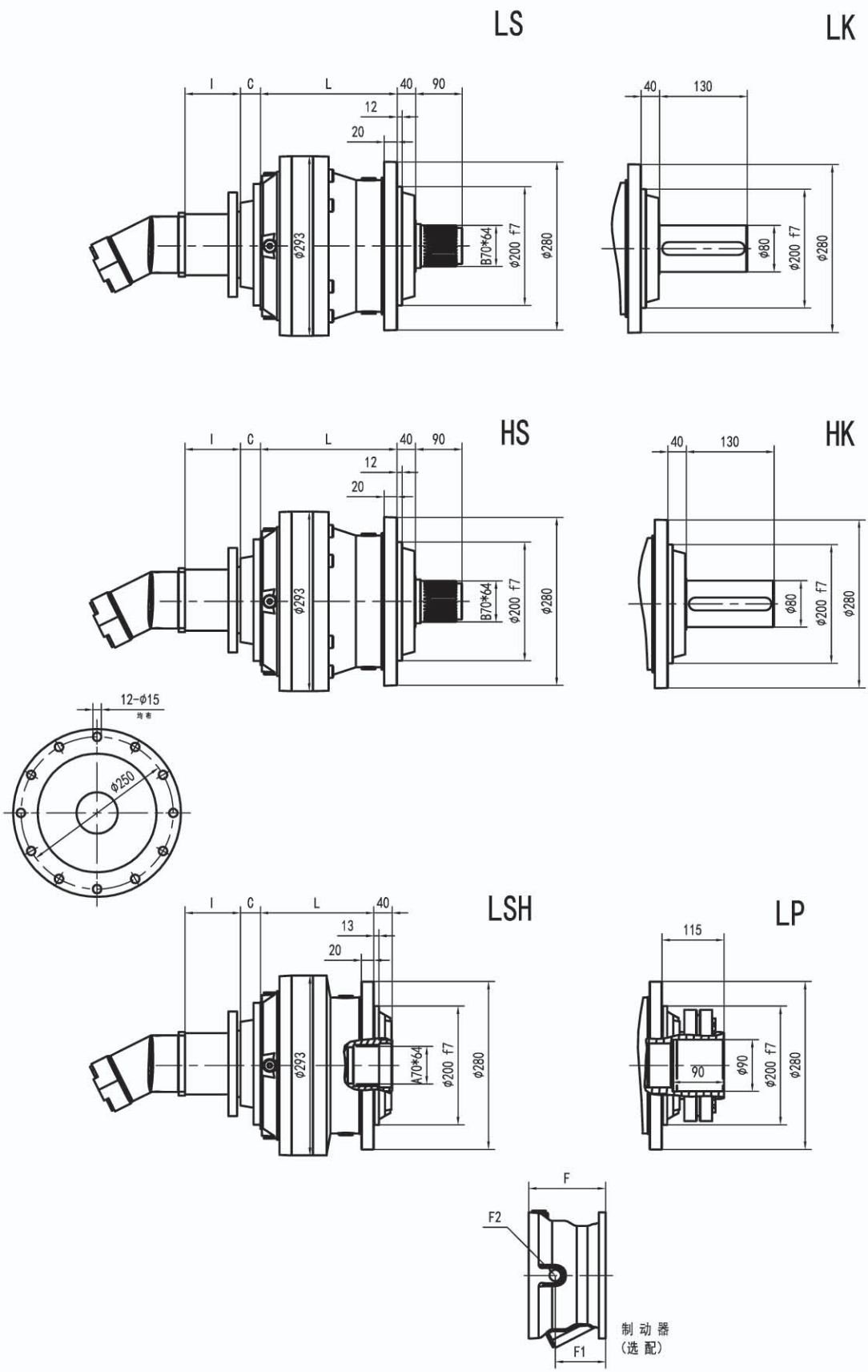
LS
LK
HS
HK
LSH
LP
I
C
L
40
90
12
20
130
13
115
φ293
B70*64
φ200 f7
φ280
φ80
φ90
12-φ15
均布
φ250
F
F2
F1
制 动 器
(选 配)

GTN06 L

MK

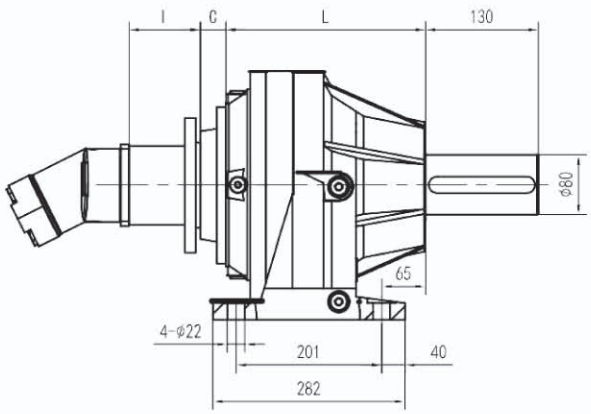

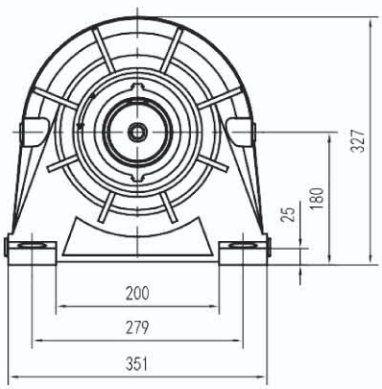

MS

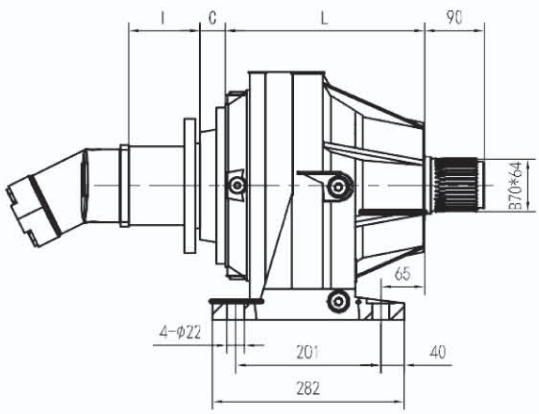

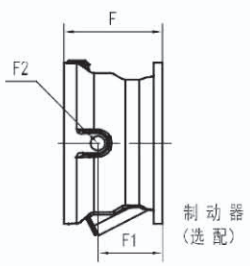

LP 输出 LP VERSION	最大输出扭矩 MAX. TRANSMISSIBLE TORQUE	12000 Nm

	L				Kg				C	输入 Input	I	F	F1	F2	类型 Type	输入 Input	Kg
	LS LK	LSH LP	HS HK	MK MS	LS LK	LSH LP	HS HK	MK MS									
GTN06 L1	160	160	195	235	65	65	70	80	45	B	联系厂家	195	147	1/4 G	6	B	28
GTN06 L2	225	225	260	300	74	74	79	89	37	A		145	95	1/4 G	5	A	16
GTN06 L3	278	278	313	353	78	78	83	93	37	A		105	65	1/4 G	4	A	10
GTN06 L4	331	331	366	406	82	82	87	97	37	A		105	65	1/4 G	4	A	10

GTN06 L

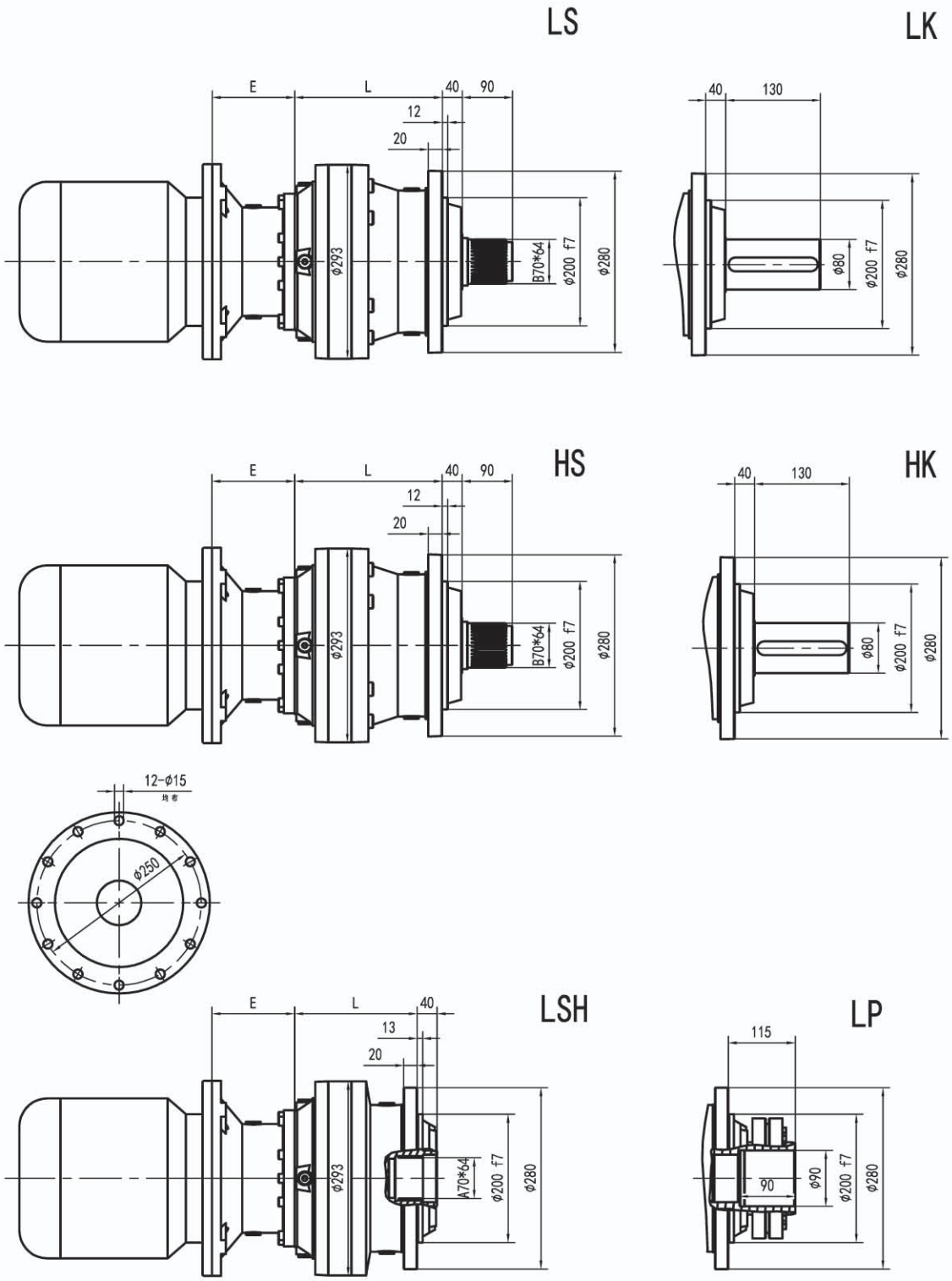
LS
LK
E
L
40
90
12
20
φ293
B70*64
φ200 f7
φ280
40
130
φ80
φ200 f7
φ280
HS
HK
12-φ15
均布
φ250
LSH
LP
13
A70*64
115
90
φ90

GTN06 L

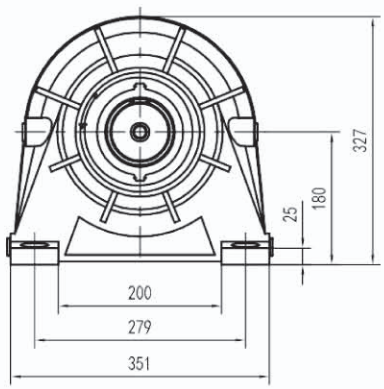

MK

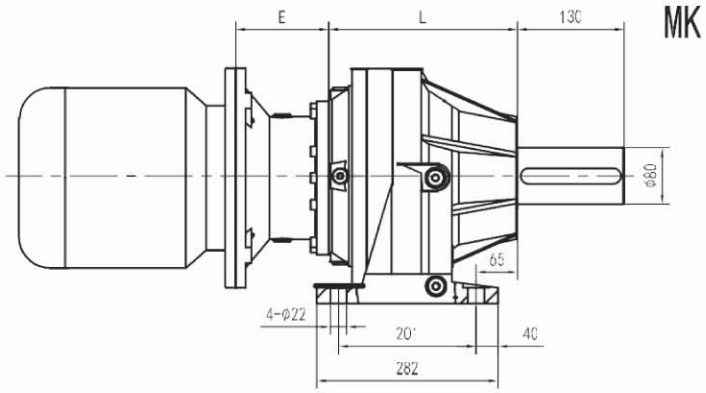

MS

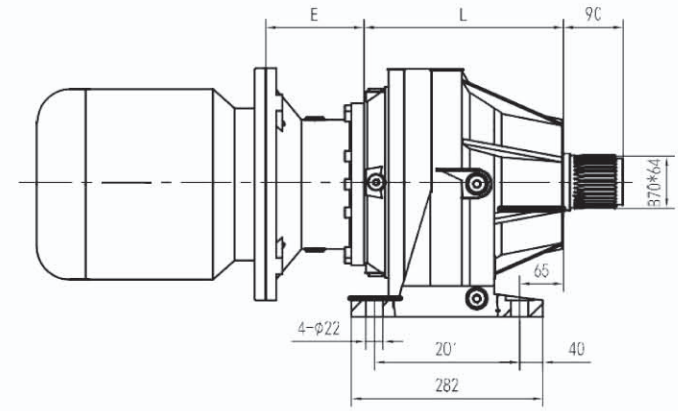

LP 输出 LP VERSION	最大输出扭矩 MAX. TRANSMISSIBLE TORQUE	12000 Nm

	L				kg				E										
	LS LK	LSH LP	HS HK	MK MS	LS LK	LSH LP	HS HK	MK MS	IEC 71	IEC 80	IEC 90	IEC 100	IEC 112	IEC 132	IEC 160	IEC 180	IEC 200	IEC 225	IEC 250
GTN06 L1	160	160	195	235	65	65	70	80							152	152	182	212	193
GTN06 L2	225	225	260	300	74	74	79	89						114	144	144	174		
GTN06 L3	278	278	313	353	78	78	83	93	65	84	84	94	94	114	144				
GTN06 L4	331	331	366	406	82	82	87	97	65	84	84	94	94	114	144				

GTN06 L

LS

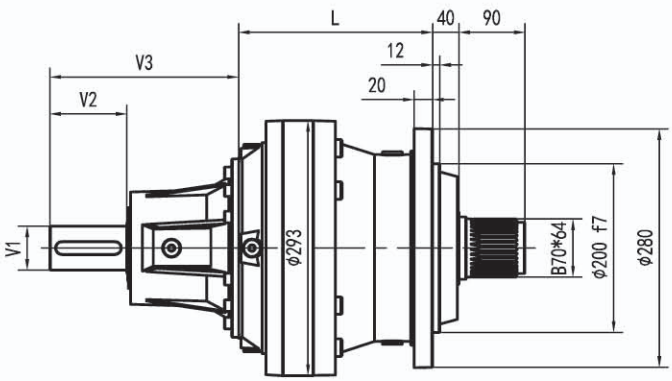

LK

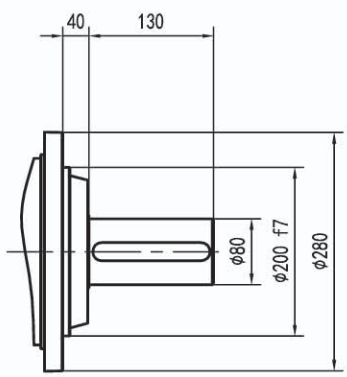

HS

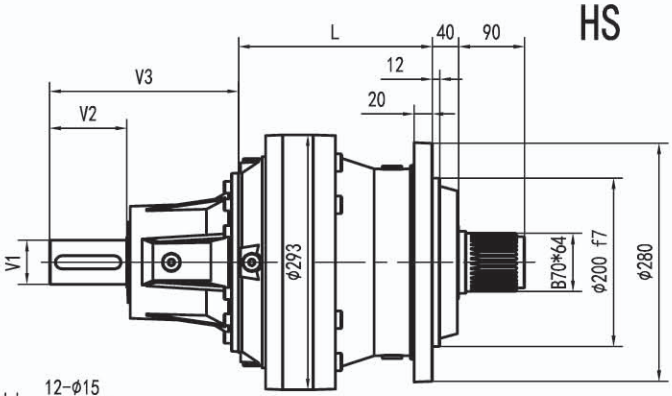

HK

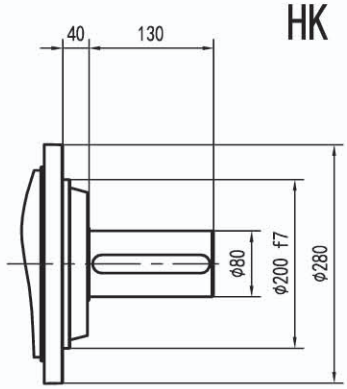

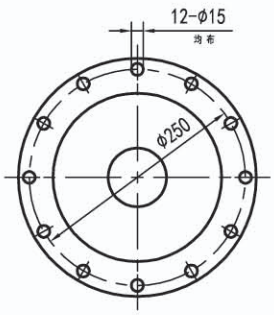

LSH

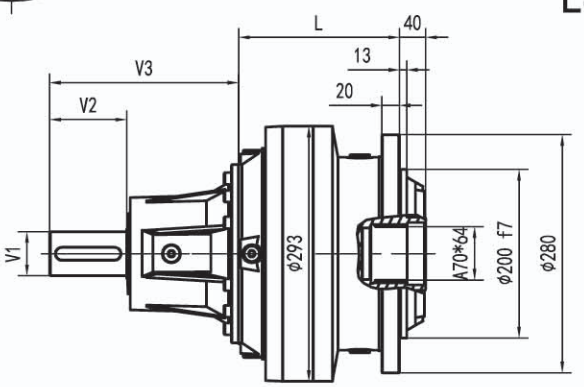

LP

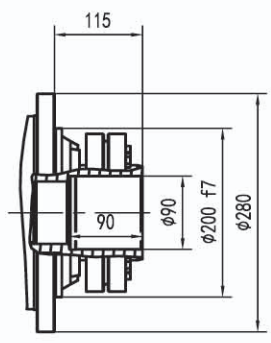

GTN06 L

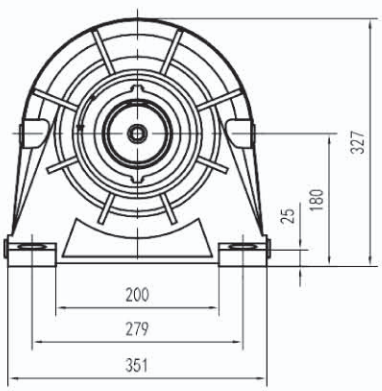

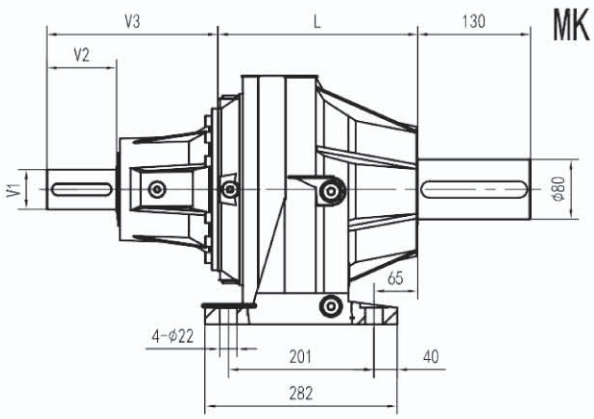

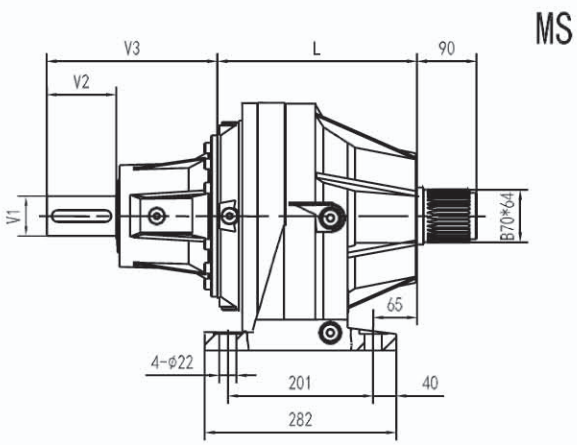

LP 输出 LP VERSION	最大输出扭矩 MAX. TRANSMISSIBLE TORQUE	12000 Nm

	L				Kg				V1	V2	V3	Kg	V1	V2	V3	Kg
	LS LK	LSH LP	HS HK	MK MS	LS LK	LSH LP	HS HK	MK MS								
GTN06 L1	160	160	195	235	65	65	70	80	60	105	307	23				
GTN06 L2	225	225	260	300	74	74	79	89	48	82	239	15				
GTN06 L3	278	278	313	353	78	78	83	93	24	36	137.5	6	38	58	158	7
GTN06 L4	331	331	366	406	82	82	87	97	24	36	137.5	6	38	58	158	7

GTN06 R

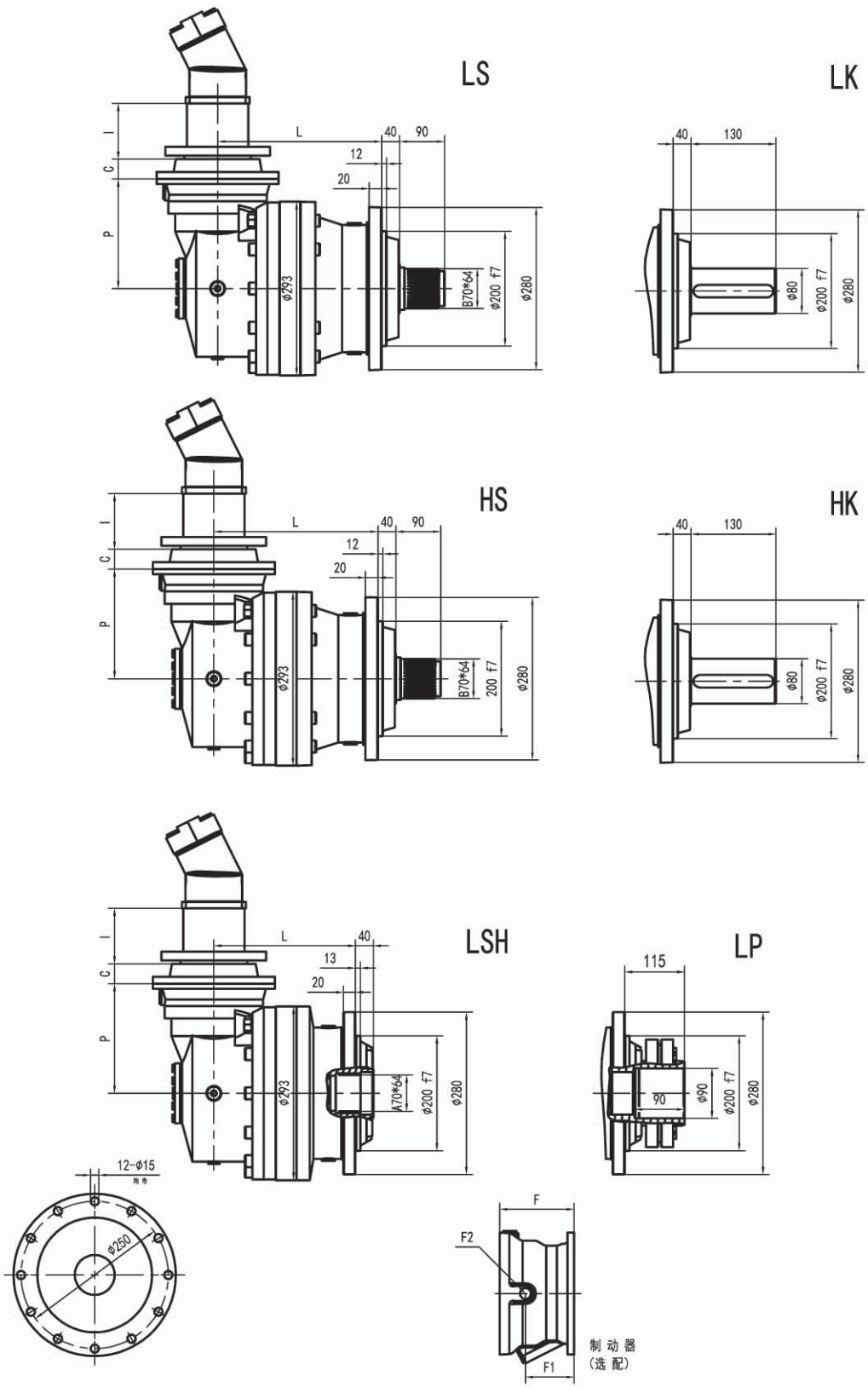
LS
LK
HS
HK
LSH
LP
L
I
C
P
40
90
12
20
130
13
115
φ293
B70*64
A70*64
φ200 f7
φ280
φ80
φ90
12-φ15
均布
φ250
F
F2
F1
制动器
(选配)

GTN06 R

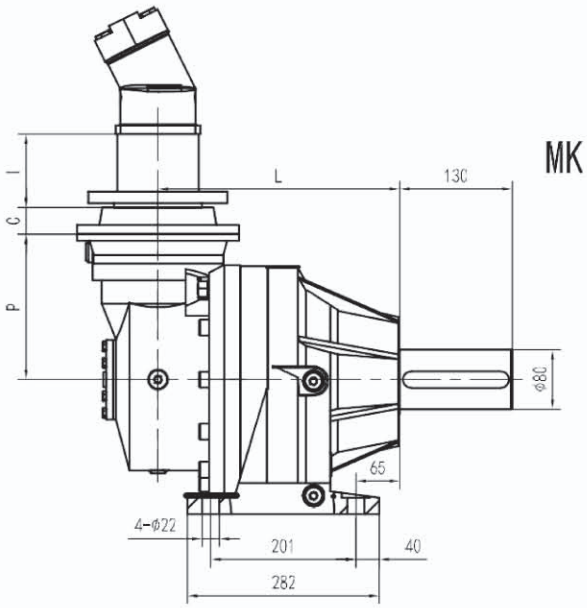

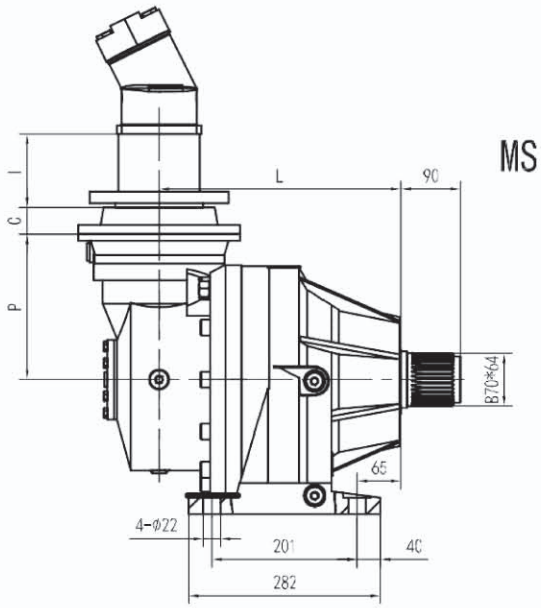

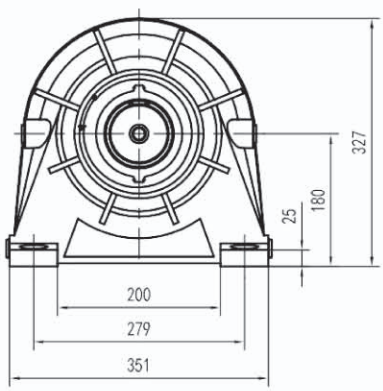

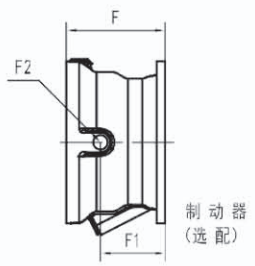

LP 输出 LP VERSION	最大输出扭矩 MAX. TRANSMISSIBLE TORQUE	12000 Nm

	L				P	Kg				C	输入 Input	I	F	F1	F2	类型 Type	输入 Input	Kg
	LS LK	LSH LP	HS HK	MK MS		LS LK	LSH LP	HS HK	MK MS									
GTN06 R2	297	297	332	372	140	89	89	94	104	37	A	联系 厂家	105	65	1/4 G	4	A	10
GTN06 R3	317	317	352	392	140	85	85	90	100	37	A		105	65	1/4 G	4	A	10
GTN06 R4	370	370	405	445	122	79	79	84	94	37	A		105	65	1/4 G	4	A	10

GTN06 R

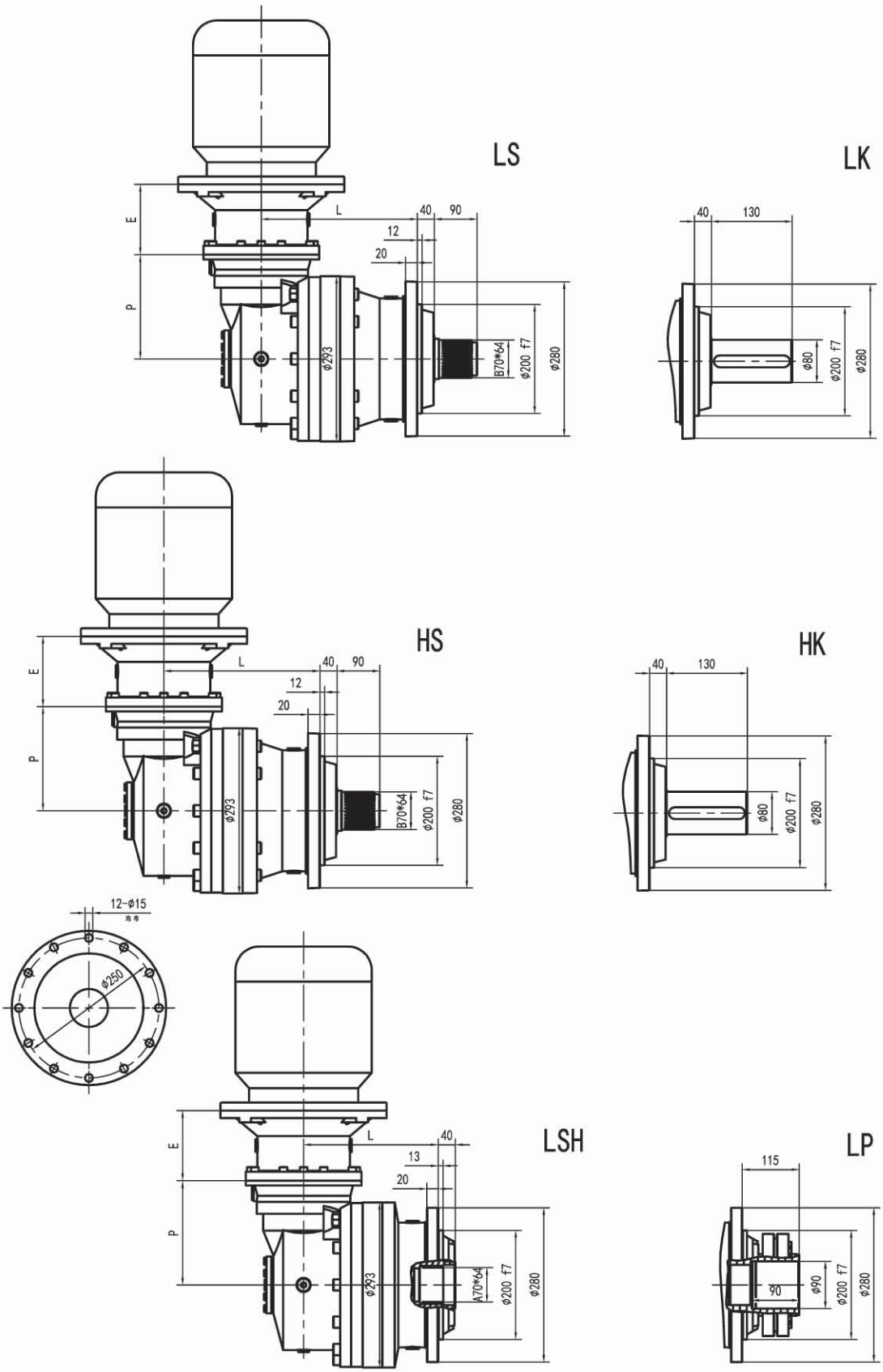
LS
LK
HS
HK
LSH
LP
E
P
L
40
90
12
20
13
130
115
φ293
B70*64
A70*64
φ200 f7
φ280
φ80
φ90
12-φ15
均布
φ250

GTN06 R

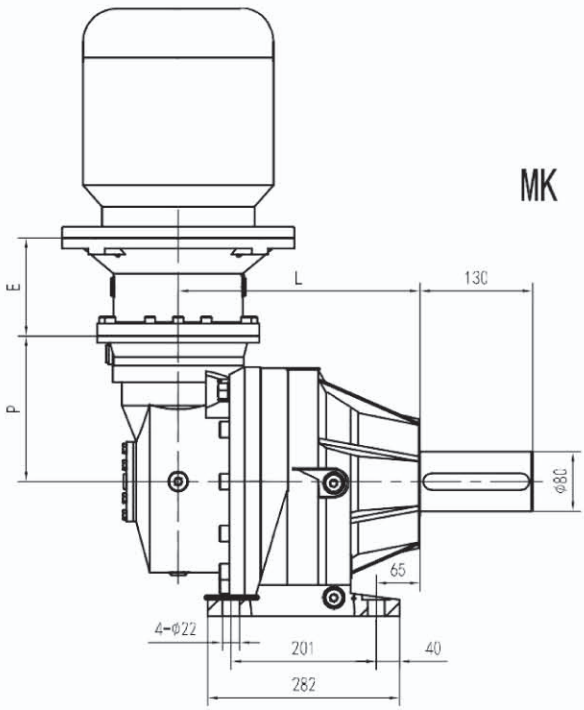

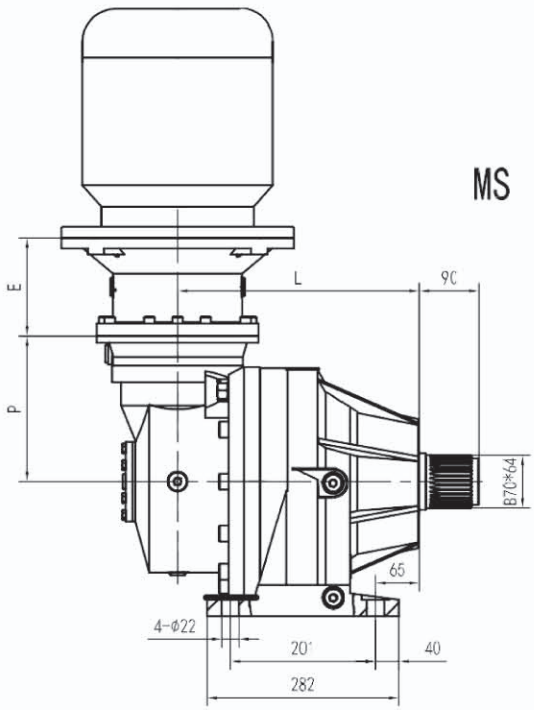

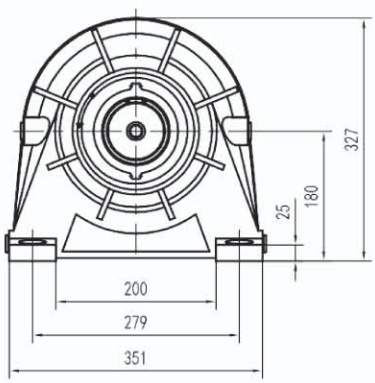

LP 输出 LP VERSION	最大输出扭矩 MAX. TRANSMISSIBLE TORQUE	12000 Nm

	L				P	Kg				E						
	LS LK	LSH LP	HS HK	MK MS		LS LK	LSH LP	HS HK	MK MS	IEC 71	IEC 80	IEC 90	IEC 100	IEC 112	IEC 132	IEC 160
GTN06 R2	297	297	332	372	140	89	89	94	104	65	84	84	94	94	114	144
GTN06 R3	317	317	352	392	140	85	85	90	100	65	84	84	94	94	114	144
GTN06 R4	370	370	405	445	122	79	79	84	94	65	84	84	94	94	114	144

GTN06 R

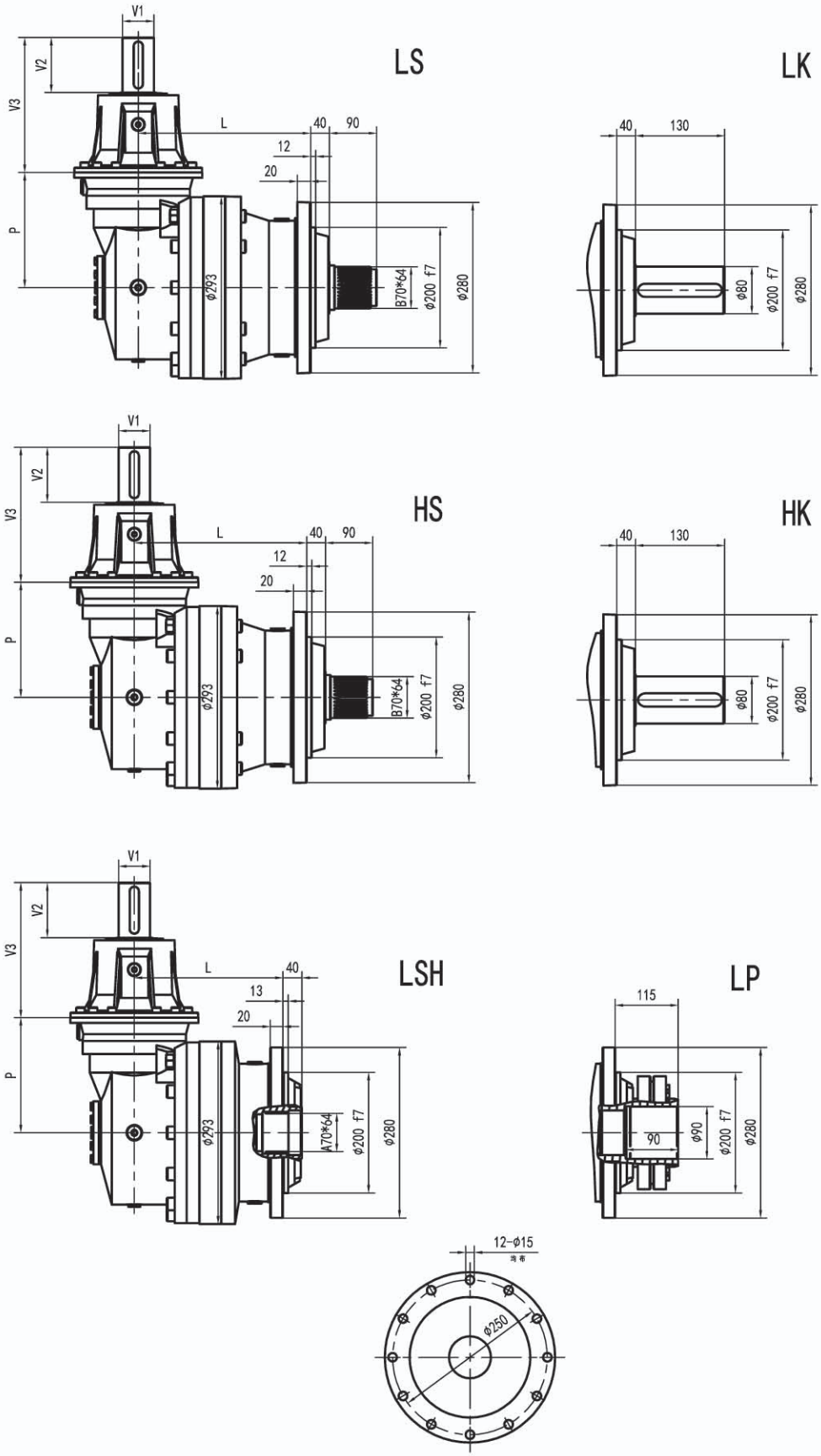
LS
LK
HS
HK
LSH
LP
V1
V2
V3
P
L
40
90
12
20
13
115
130
φ293
B70*64
A70*64
φ200 f7
φ280
φ80
φ90
12-φ15
φ250

GTN06 R

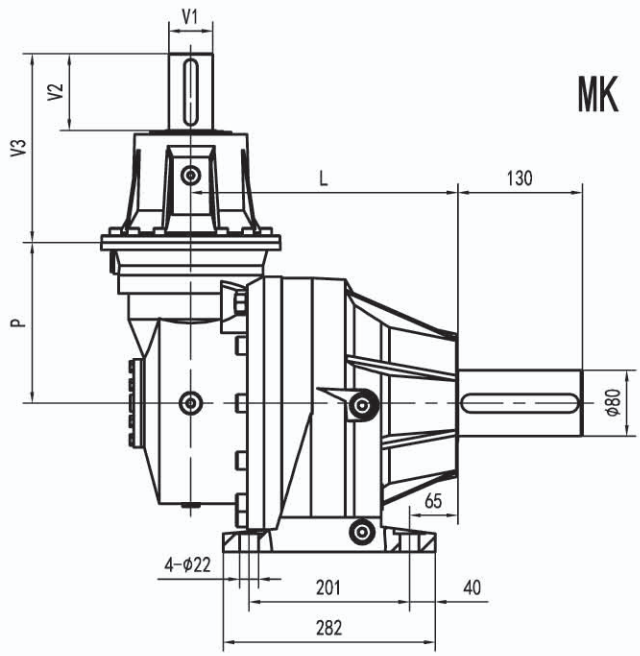

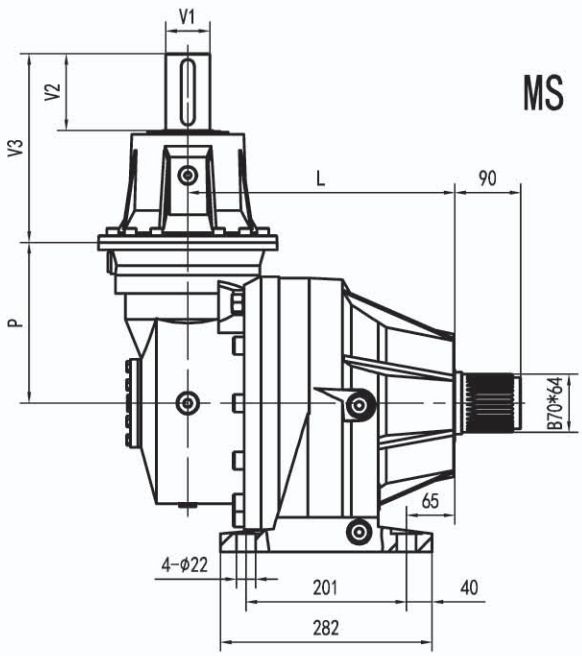

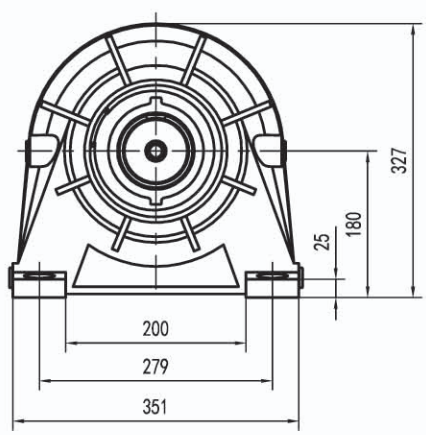

LP 输出 LP VERSION	最大输出扭矩 MAX. TRANSMISSIBLE TORQUE	12000 Nm

	L				P	Kg				V1	V2	V3	Kg	V1	V2	V3	Kg
	LS LK	LSH LP	HS HK	MK MS		LS LK	LSH LP	HS HK	MK MS								
GTN06 R2	297	297	332	372	140	89	89	94	104	24	36	137.5	6	38	58	158	7
GTN06 R3	317	317	352	392	140	85	85	90	100	24	36	137.5	6	38	58	158	7
GTN06 R4	370	370	405	445	122	79	79	84	94	24	36	137.5	6	38	58	158	7

GTN06 L - GTN06 R

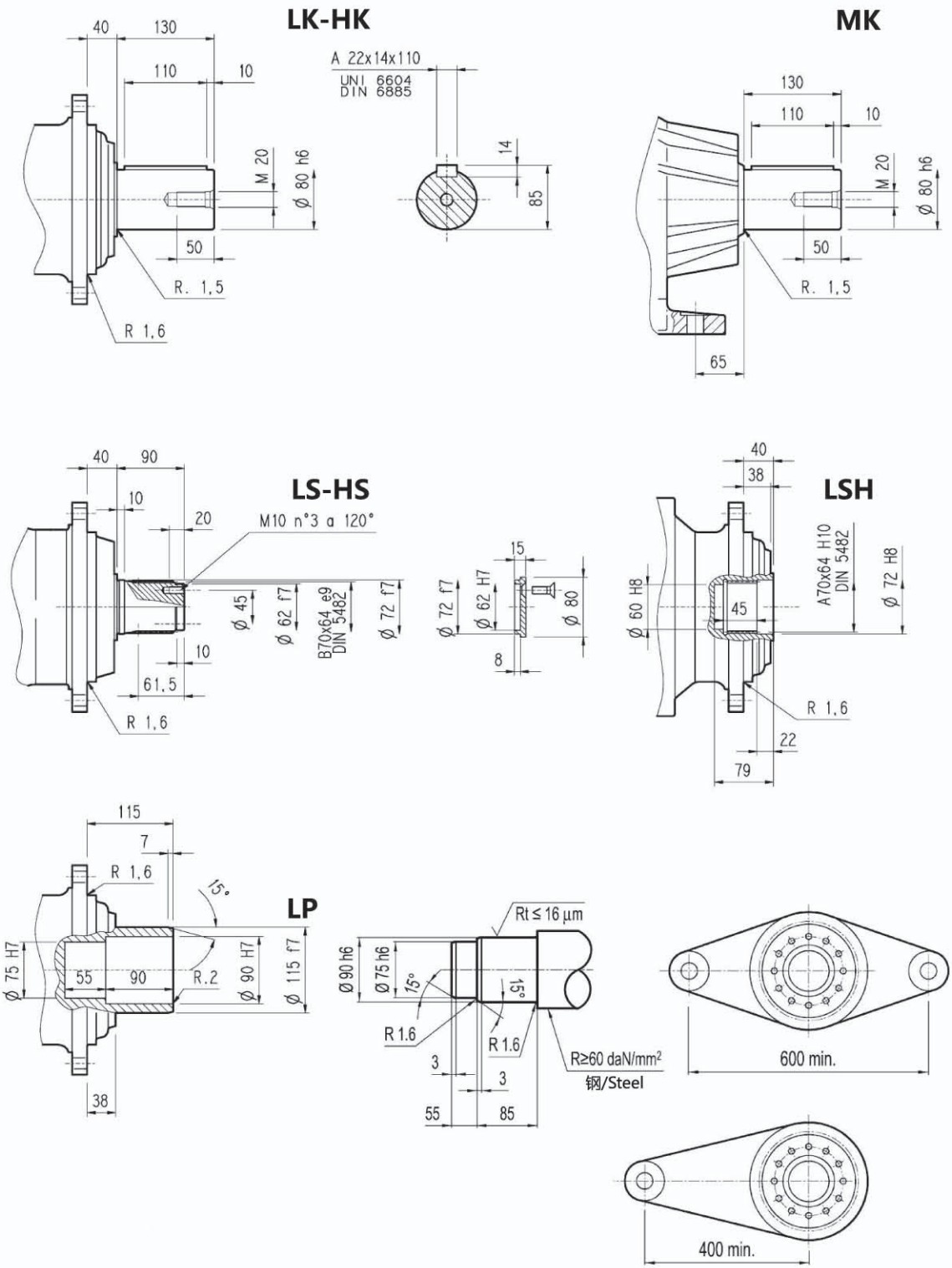

LP 输出 LP VERSION	最大输出扭矩 MAX. TRANSMISSIBLE TORQUE	12000 Nm

GTN06 L - GTN06 R

法兰/Flange

FOA



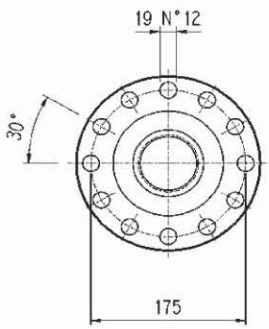

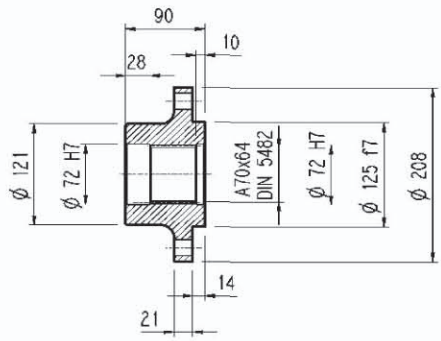

材料：C40
Material : Steel C40

输出齿轮/Output pinions

PM...



代号 Code	m	z	x	dp	di	de	H	A	B	C	☆
PM801	8	15	0	120	100	134	90	0	0	0	□
PM802	8	15	0.500	120	108	141	90	0	0	0	□
PM1001	10	11	0.500	110	95	136	90	10	0	0	□
PM1002	10	12	0.450	120	104	145	90	0	0	0	□
PM1003	10	12	0.320	120	100	144.2	90	0	0	0	□
PM1004	10	12	0.350	120	101	144	90	0	0	0	□
PM1005	10	13	0.950	130	124	165	90	0	0	0	□
PM1006	10	13	0.500	130	115	159	90	0	0	0	□
PM1007	10	14	0	140	115	160	90	0	0	0	□
PM1008	10	14	0.500	140	125	166	90	0	0	0	■
PM1009	10	15	0	150	127	167	90	24	0	0	□
PM1010	10	17	0.480	170	154	197.5	90	10	0	0	□
PM1011	10	20	0	200	175	220	90	10	0	0	■

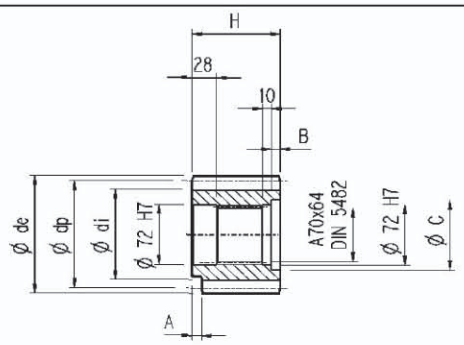

☆	材料 / Material
□	39NiCrMo3 调制钢 Steel 39NiCrMo3 hardened and tempered
■	18NiCrMo5 表面渗碳钢 18NiCrMo5 Case hardened

套筒联轴器/Sleeve couplings

HOS

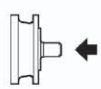

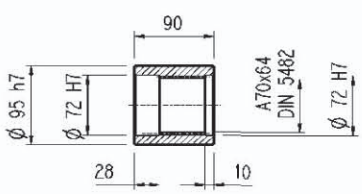

材料：16CrNi4
Material : Steel 16CrNi4

花键棒料/Splined bars

SOF



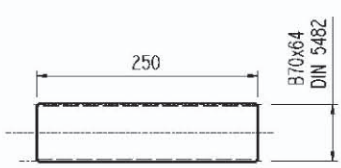

表面硬化钢18NiCrMo5 NUI5331,表面必须硬化50-55HRCCase hardening steel 18NiCrMo5 UNI 5331 must be case hardened 50-55 HRC

锁紧盘/Shrink disc

LOP



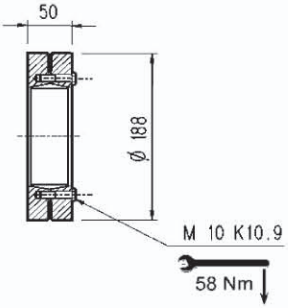

GTN06 L - GTN06 R

输入轴/Input shaft

S_ _

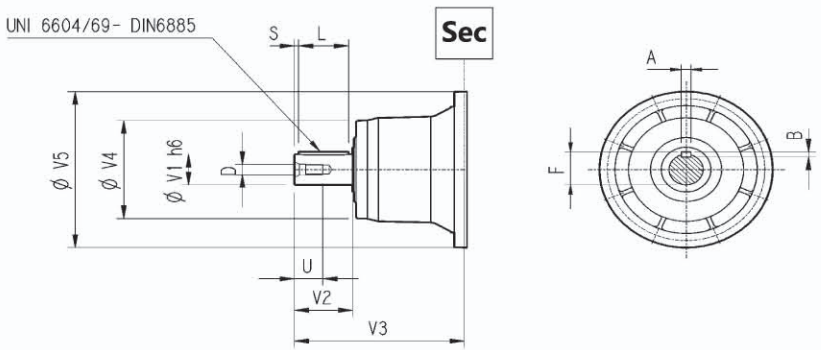

SV_ _

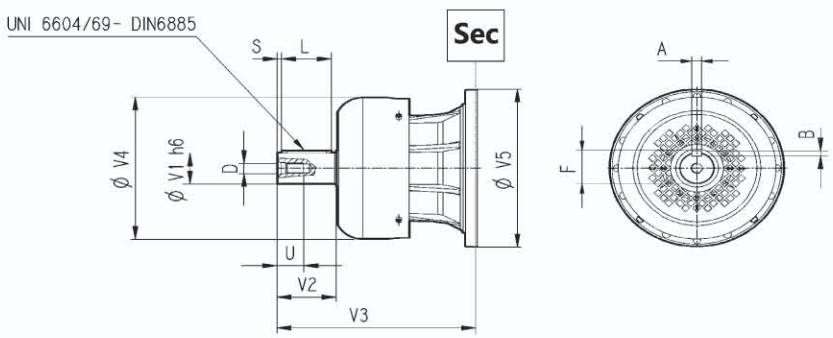

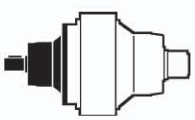

	CODE	V1	V2	V3	V4	V5	A	B	F	L	S	D	U
GTN06 L1	S06B	60	105	307	155	292	18	11	64	90	7.5	M16	36
	SV06B	60	105	357	309	292	18	11	64	90	7.5	M16	36
GTN06 L2	S05B	48	82	239	155	245	14	9	51.5	70	6	M16	36
	SV05B	48	82	276	219.5	244	14	9	51.5	70	6	M16	36
GTN06 L3	S01A	24	36	137.5	120	186	8	7	27	30	3	M8	19
	S01B	38	58	158	120	186	10	8	41	50	4	M12	28
GTN06 L4	S01A	24	36	137.5	120	186	8	7	27	30	3	M8	19
	S01B	38	58	158	120	186	10	8	41	50	4	M12	28
GTN06 R2-R3-R4	S01A	24	36	137.5	120	186	8	7	27	30	3	M8	19
	S01B	38	58	158	120	186	10	8	41	50	4	M12	28

无电机适配器输入尺寸
Input dimension without motor adaptor

S_ _

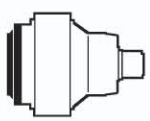

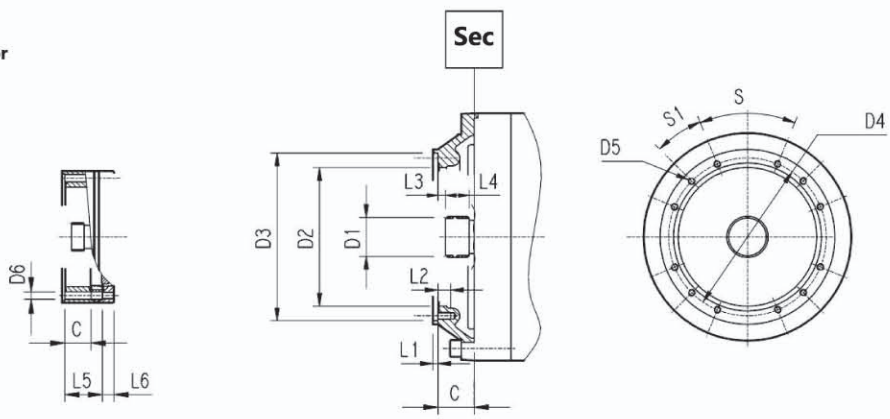

	CODE	C	D1	D2	D3	D4	D5	D6	L1	L2	L3	L4	L5	L6	S	S1	输入 Input
GTN06 L1	S9AB	45	58x53 DIN5482	195	236 H7	222	M10 n°12	/	4	18	11	22	/	/	45°	22.5°	B
GTN06 L2	S9AA	37	40x36 DIN5482	140	178 H7	165	M10 n°8	/	4	18	9	18	/	/	45°	45°	A
GTN06 L3	S9AA	37	40x36 DIN5482	140	178 H7	165	M10 n°8	11	4	/	9	18	53	18	45°	45°	A
GTN06 L4	S9AA	37	40x36 DIN5482	140	178 H7	165	M10 n°8	11	4	/	9	18	106	18	45°	45°	A
GTN06 R2-R3-R4	S9AA	37	40x36 DIN5482	140	178 H7	165	M10 n°8	11	4	/	9	18	37	18	45°	45°	A

GTN06 L - GTN06 R

Fh_2 输出轴允许的径向和轴向载荷
$n_2 \cdot h = 10000$

Permissible radial and axial loadson output shaft with Fh_2
$n_2 \cdot h = 10000$

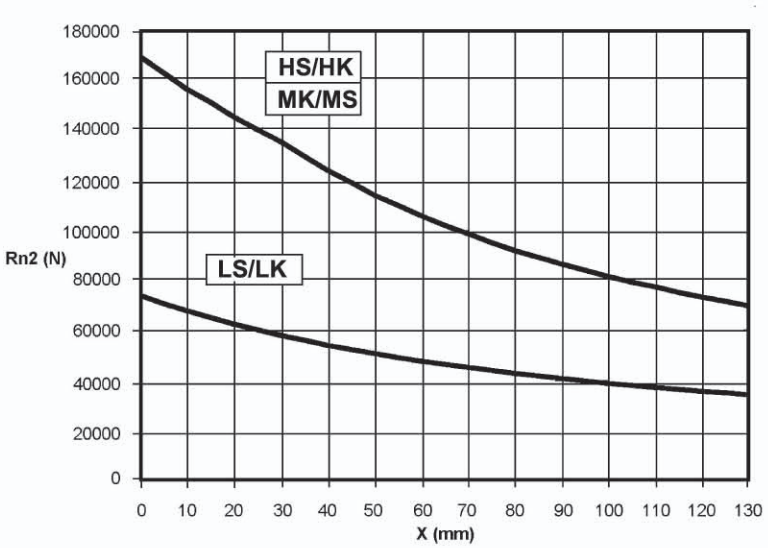

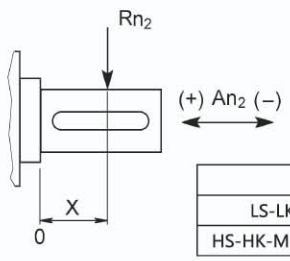

	An2 (+)	An2 (-)
LS-LK	70000	44000
HS-HK-MK-MS	120000	60000

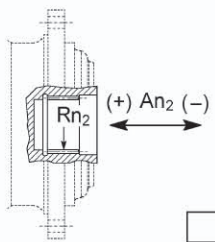

	Rn2	An2 (+/-)
LSH	35000	35000

轴上的载荷修正系数 fh_2 Load corrective factor fh_2 on shafts	$Fh_2 = n_2 \cdot h$		10000	25000	50000	100000	500000	1000000
	fh_2	LS- LK- LSH	1	0.74	0.58	0.46	0.27	0.21
		HS- HK- MK- MS	1	0.76	0.61	0.50	0.31	0.25

Fh_1输入轴允许的径向和轴向载荷
$n_1 \cdot h = 250000$

Permissible radial loads on inputshaft with Fh_1 : $n_1 \cdot h = 250000$

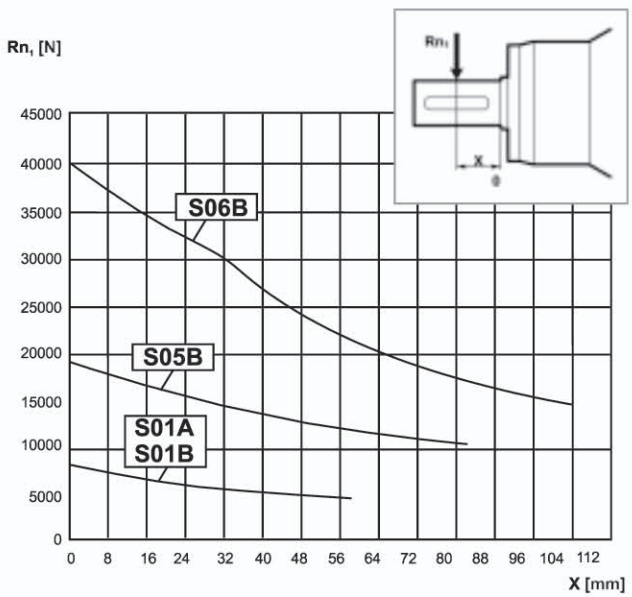

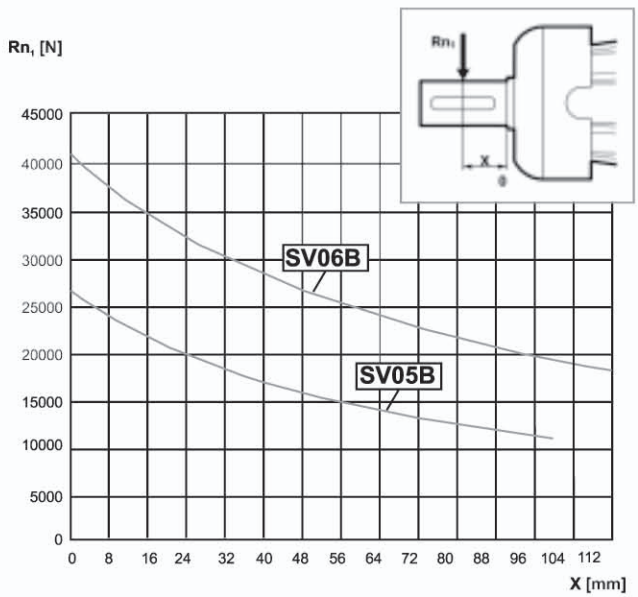

轴上的载荷修正系数fh_1 Load corrective factor fh_1 on shafts	$Fh_1 = n_1 \cdot h$	250000	500000	1000000	2000000	5000000	10000000
	fh_1	1	0.79	0.63	0.50	0.37	0.29

GTN07 L

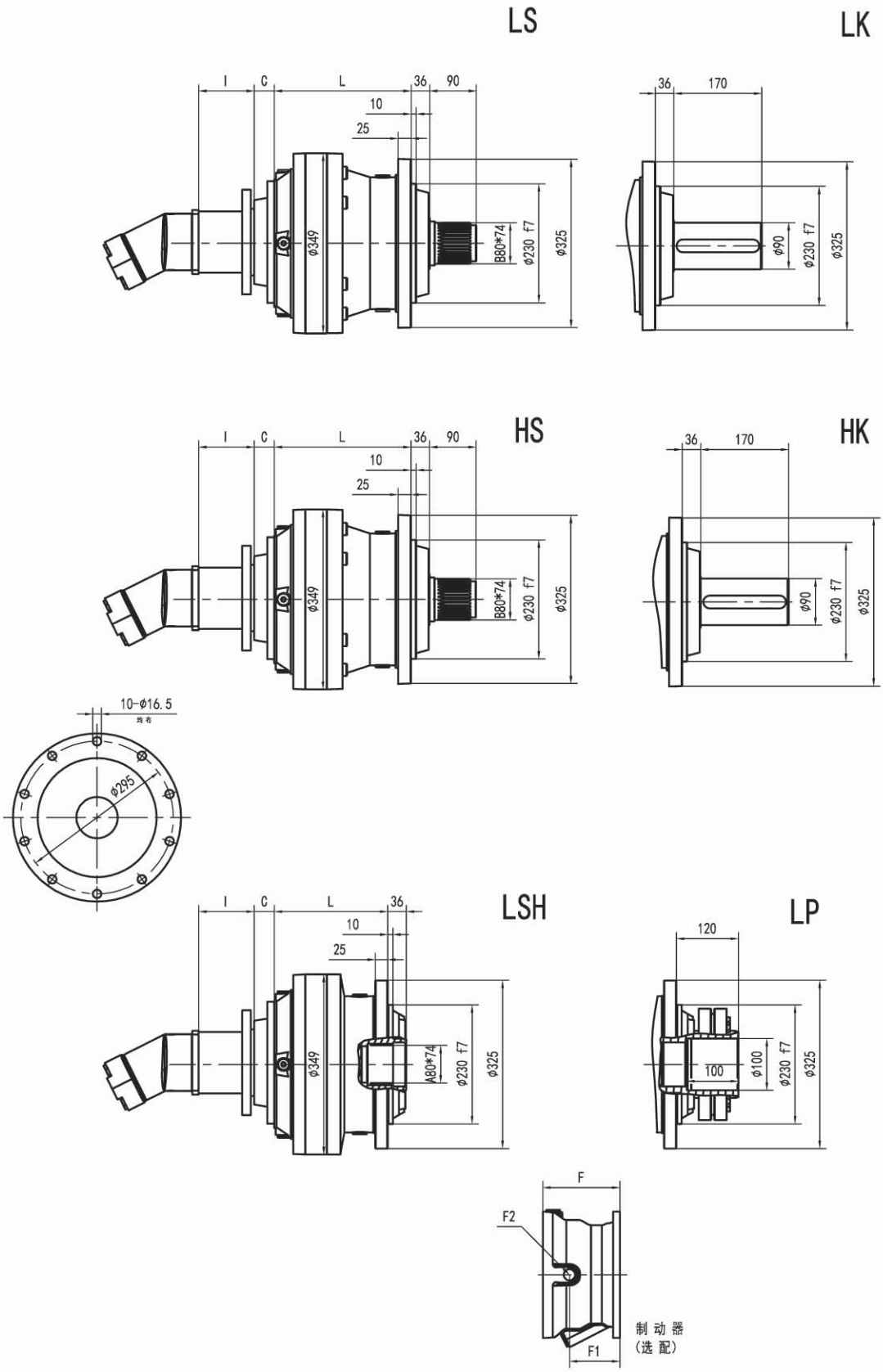
LS
LK
I
C
L
36
90
10
25
φ349
B80*74
φ230 f7
φ325
36
170
φ90
φ230 f7
φ325
HS
HK
I
C
L
36
90
10
25
φ349
B80*74
φ230 f7
φ325
36
170
φ90
φ230 f7
φ325
10-φ16.5
均布
φ295
LSH
LP
I
C
L
36
10
25
φ349
B80*74
φ230 f7
φ325
120
100
φ100
φ230 f7
φ325
F
F2
F1
制 动 器
(选 配)

GTN07 L

MK

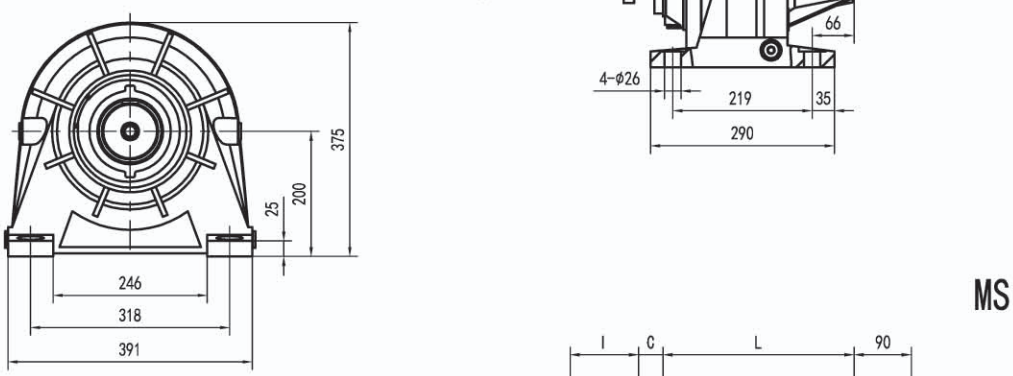

MS

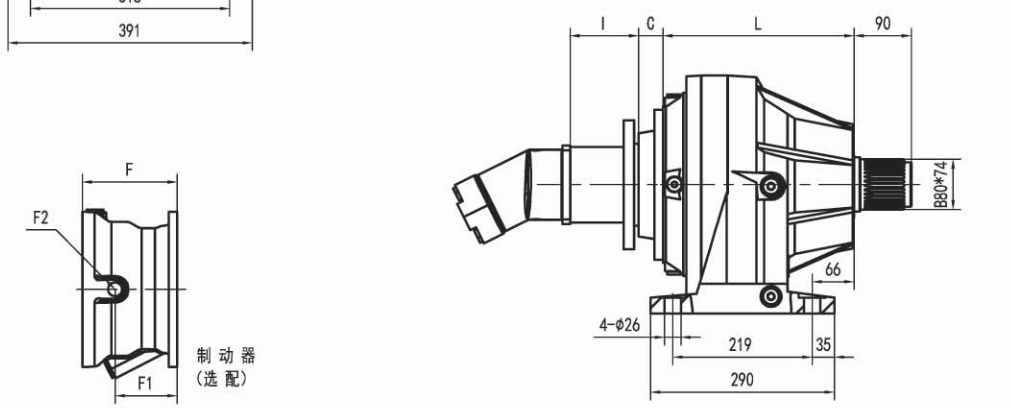

LP输出 LP VERSION	最大输出扭矩 MAX. TRANSMISSIBLE TORQUE	18000 Nm

	L				Kg						I	F	F1	F2	类型 Type	输入 Input	Kg
	LS LK	LSH LP	HS HK	MK MS	LS LK	LSH LP	HS HK	MK MS	C	输入 Input							
GTN07 L1	165	165	210	246	95	85	105	120	51	B	联系厂家	201	153	1/4 G	6	B	28
GTN07 L2	254	254	299	335	107	97	117	132	37	A		145	95	1/4 G	5	A	16
GTN07 L3	319	319	364	400	114	104	124	139	37	A		105	65	1/4 G	4	A	10
GTN07 L4	372	372	417	453	118	108	128	143	37	A		105	65	1/4 G	4	A	10

GTN07 L

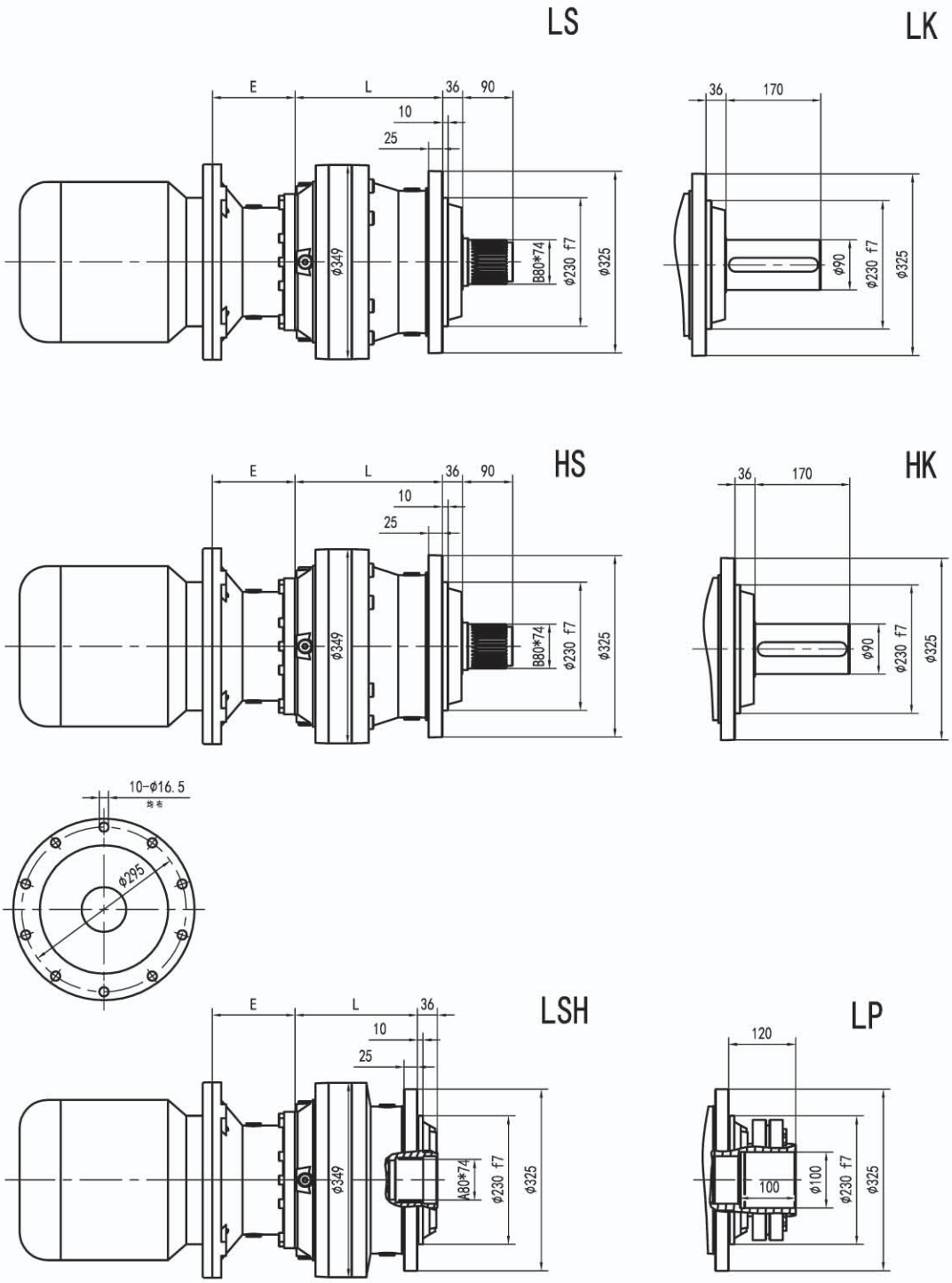
LS
LK
E
L
36
90
10
25
36
170
φ349
B80*74
φ230 f7
φ325
φ90
HS
HK
10-φ16.5
均布
φ795
LSH
LP
A80*74
120
100
φ100

GTN07 L

MK

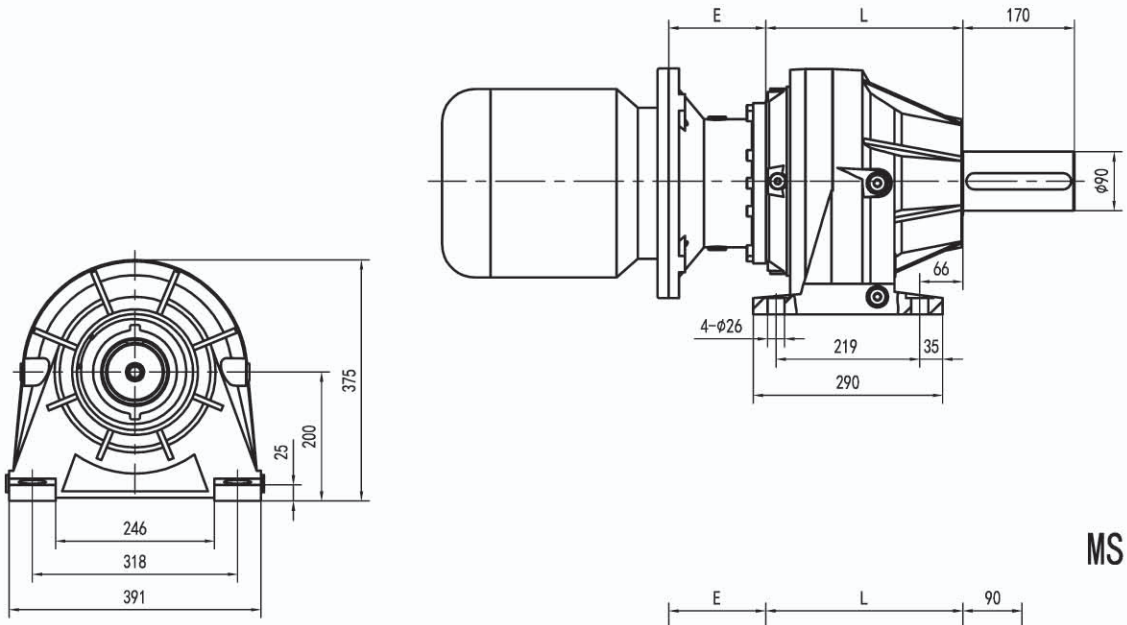

MS

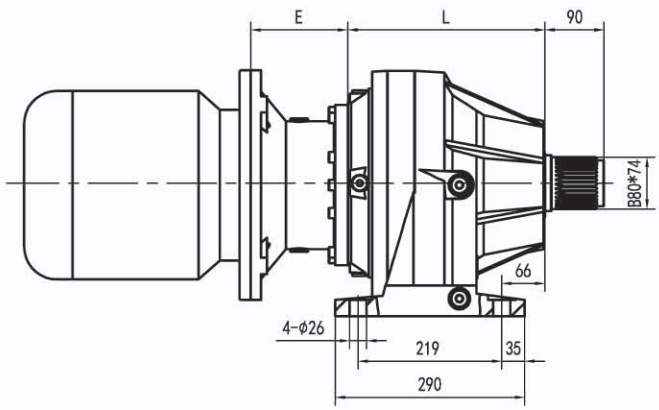

LP输出 LP VERSION	最大输出扭矩 MAX. TRANSMISSIBLE TORQUE	18000 Nm

	L				Kg				E										
	LS LK	LSH LP	HS HK	MK MS	LS LK	LSH LP	HS HK	MK MS	IEC 71	IEC 80	IEC 90	IEC 100	IEC 112	IEC 132	IEC 160	IEC 180	IEC 200	IEC 225	IEC 250
GTN07 L1	165	165	210	246	95	85	105	120								195	186	216	215
GTN07 L2	254	254	299	335	107	97	117	132						114	144	144	174		
GTN07 L3	319	319	364	400	114	104	124	139	65	84	84	94	94	114	144				
GTN07 L4	372	372	417	453	118	108	128	143	65	84	84	94	94	114	144				

GTN07 L

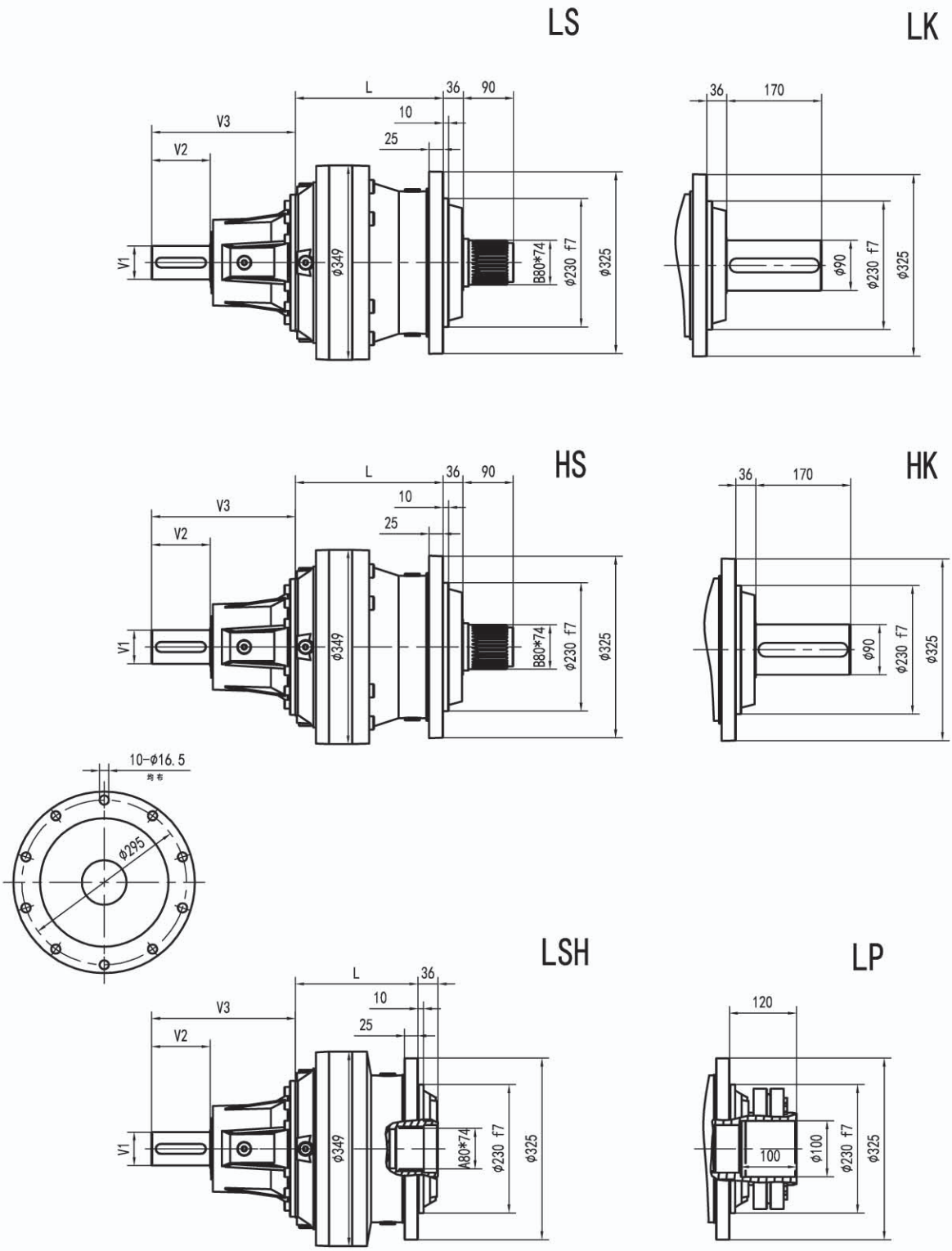
LS
LK
L
36
90
10
25
V3
V2
V1
φ349
B80*74
φ230 f7
φ325
170
φ90
HS
HK
10-φ16.5
均布
φ295
LSH
LP
A80*74
120
100
φ100

GTN07 L

MK

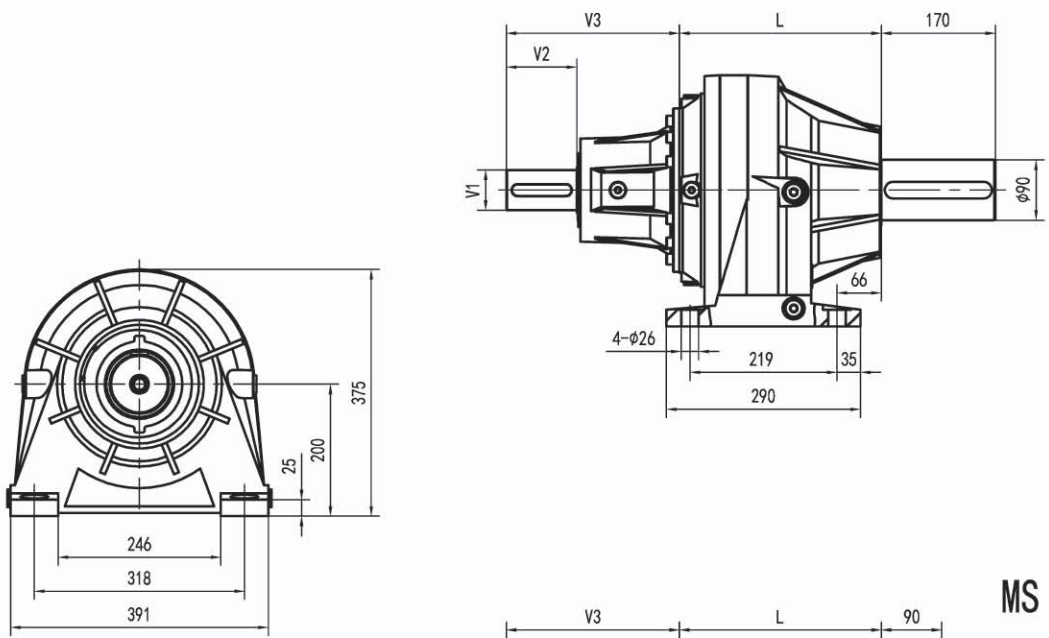

MS

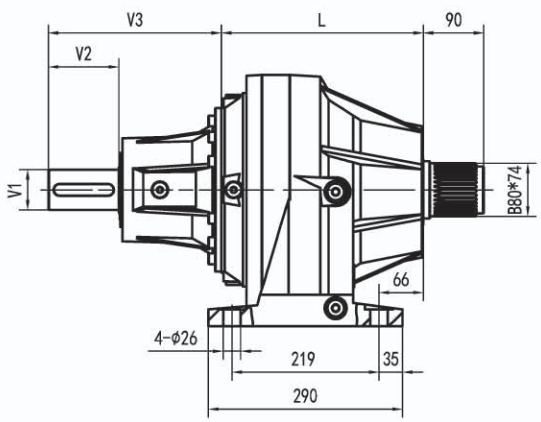

LP输出 LP VERSION	最大输出扭矩 MAX. TRANSMISSIBLE TORQUE	18000 Nm

	L				Kg				V1	V2	V3	Kg	V1	V2	V3	Kg
	LS LK	LSH LP	HS HK	MK MS	LS LK	LSH LP	HS HK	MK MS								
GTN07 L1	165	165	210	246	95	85	105	120	80	130	315	35	60	105	313	28
GTN07 L2	254	254	299	335	107	97	117	132	48	82	239	15				
GTN07 L3	319	319	364	400	114	104	124	139	24	36	137.5	6	38	58	158	7
GTN07 L4	372	372	417	453	118	108	128	143	24	36	137.5	6	38	58	158	7

GTN07 R

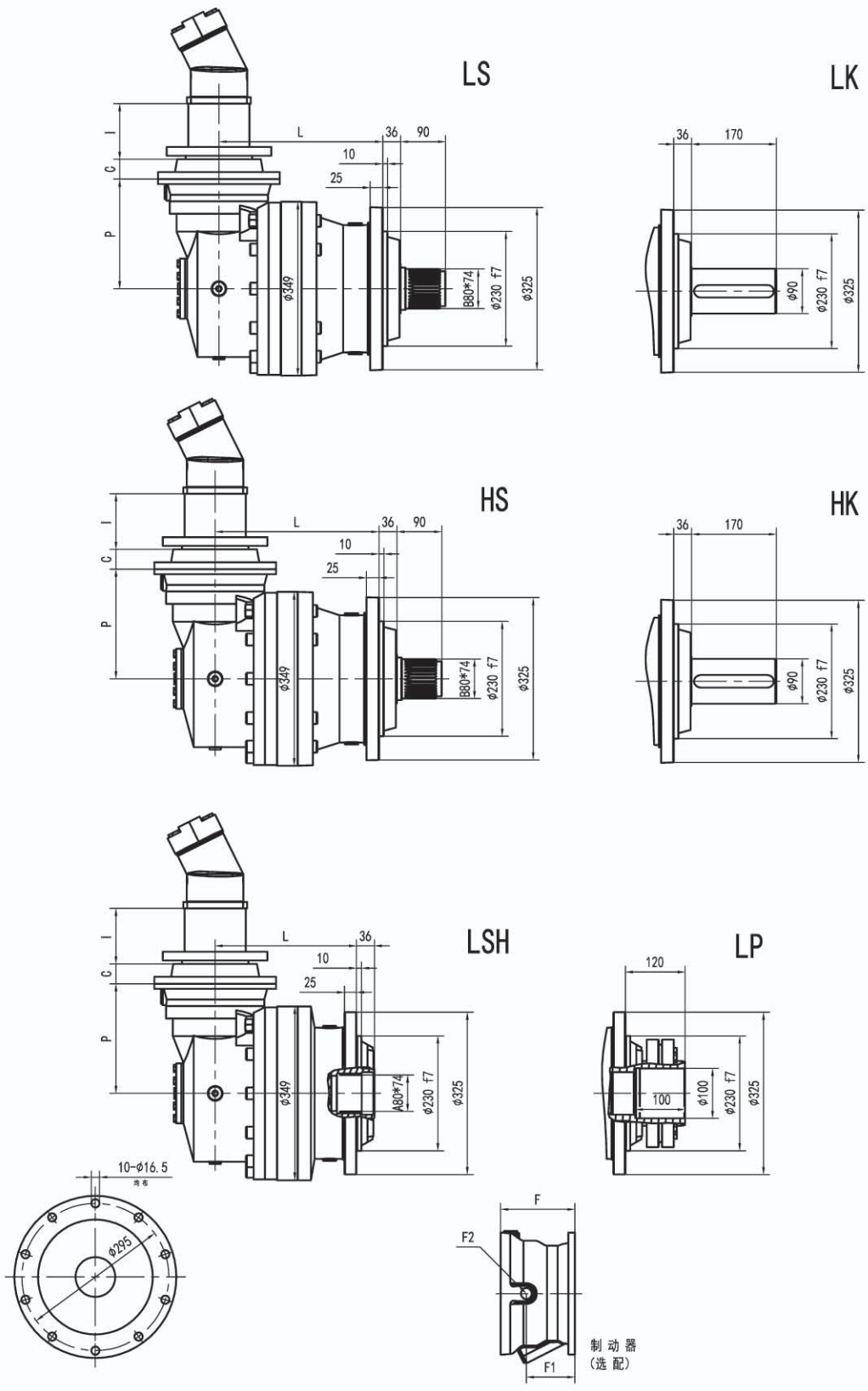
LS
LK
HS
HK
LSH
LP
L
36
90
10
25
I
C
P
φ349
B80*74
φ230 f7
φ325
170
φ90
120
100
φ100
10-φ16.5
均布
φ295
F
F2
F1
制动器
(选配)

GTN07 R

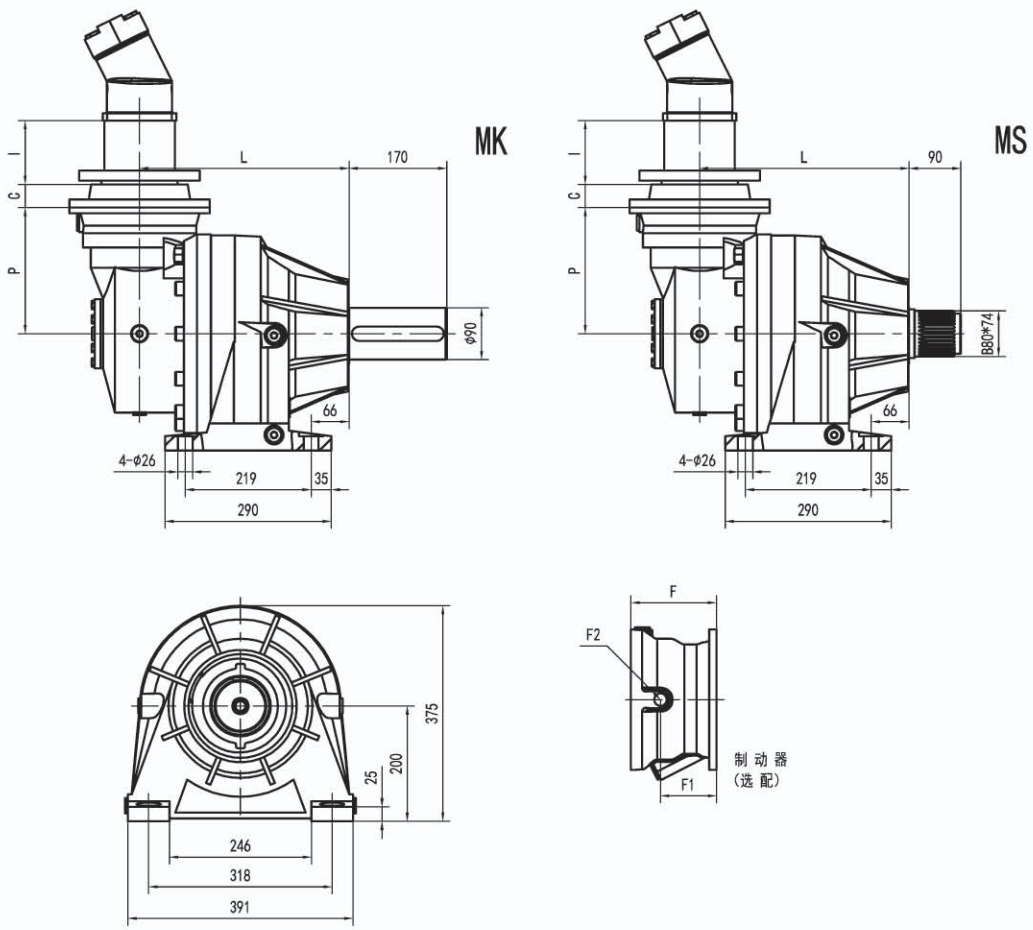

LP输出 LP VERSION	最大输出扭矩 MAX. TRANSMISSIBLE TORQUE	18000 Nm

	L				P	Kg				C	输入 Input	I	F	F1	F2	类型 Type	输入 Input	Kg
	LS LK	LSH LP	HS HK	MK MS		LS LK	LSH LP	HS HK	MK MS									
GTN07 R2	284	297	329	365	225	145	135	155	170	37	A	联系厂家	145	95	1/4 G	5	A	16
GTN07 R3	346	317	391	427	140	127	117	137	152	37	A		105	65	1/4 G	4	A	10
GTN07 R4	411	411	456	492	122	128	118	138	153	37	A		105	65	1/4 G	4	A	10

GTN07 R

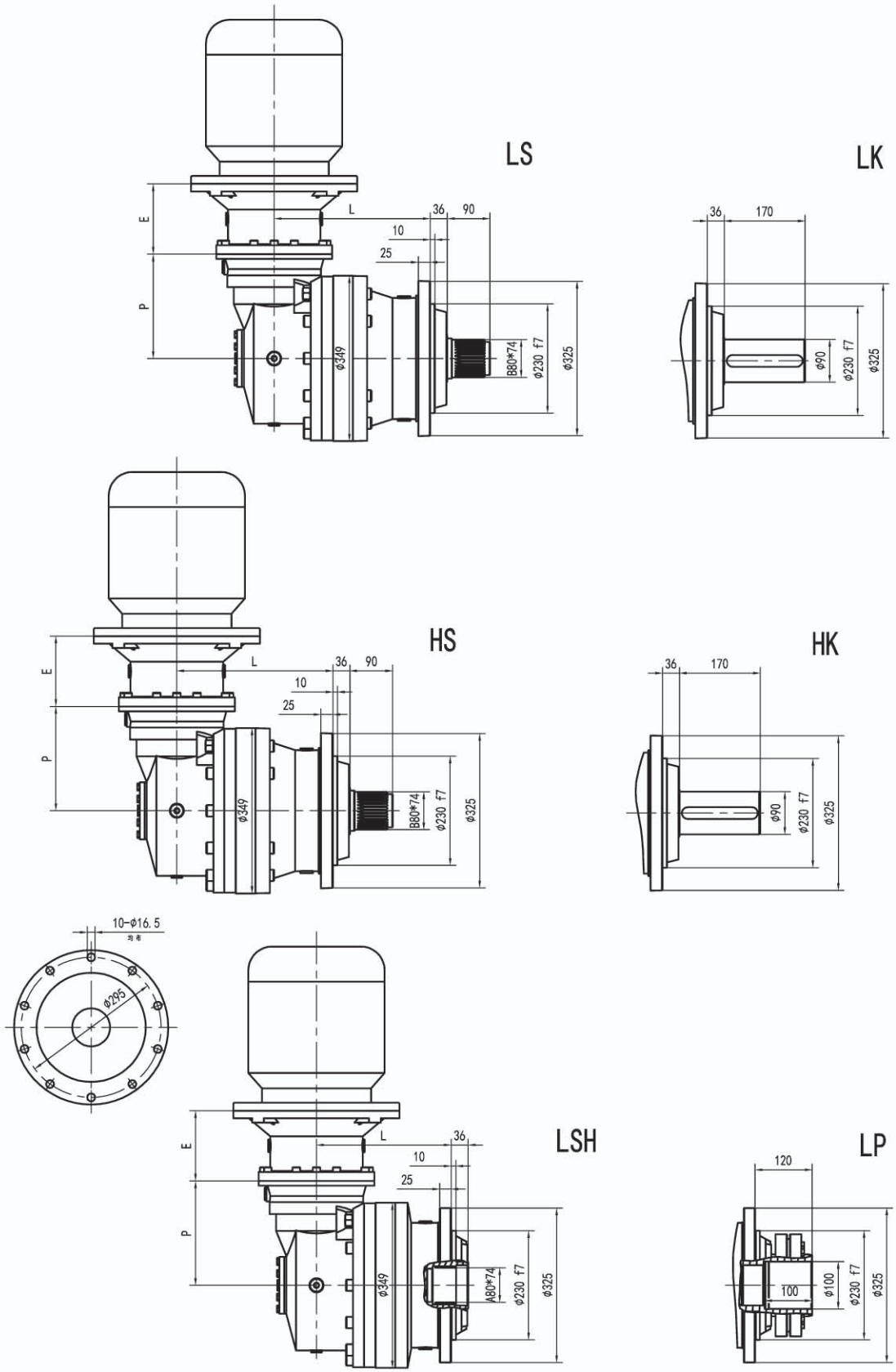
LS
LK
HS
HK
LSH
LP
E
P
L
36
90
10
25
170
120
100
ϕ349
ϕ325
ϕ230 f7
ϕ90
ϕ100
B80*74
A80*74
10-ϕ16.5
均布
ϕ295

GTN07 R

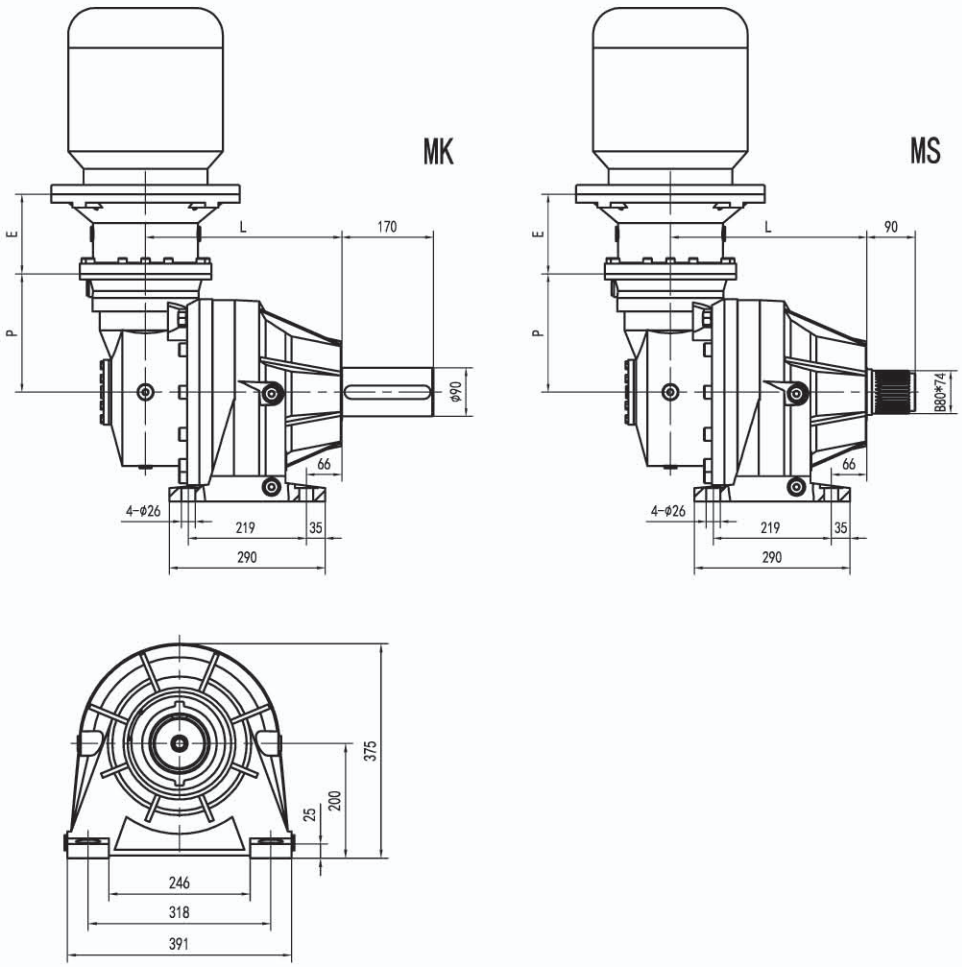

LP输出 LP VERSION	最大输出扭矩 MAX. TRANSMISSIBLE TORQUE	18000 Nm

	L				P	Kg				E								
	LS LK	LSH LP	HS HK	MK MS		LS LK	LSH LP	HS HK	MK MS	IEC 71	IEC 80	IEC 90	IEC 100	IEC 112	IEC 132	IEC 160	IEC 180	IEC 200
GTN07 R2	284	297	329	365	225	145	135	155	170						114	144	144	174
GTN07 R3	346	317	391	427	140	127	117	137	152	65	84	84	94	94	114	144		
GTN07 R4	411	411	456	492	122	128	118	138	153	65	84	84	94	94	114	144		

GTN07 R

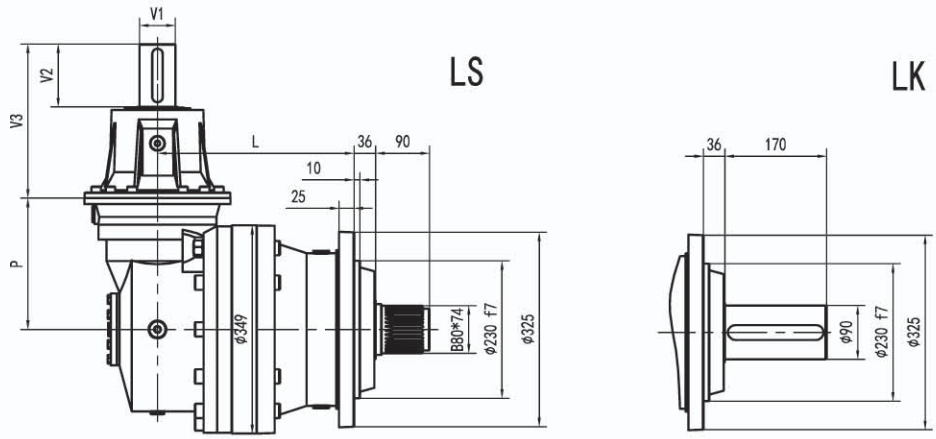
LS
LK
V1
V2
V3
P
L
36
90
10
25
ϕ349
B80*74
ϕ230 f7
ϕ325
170
ϕ90

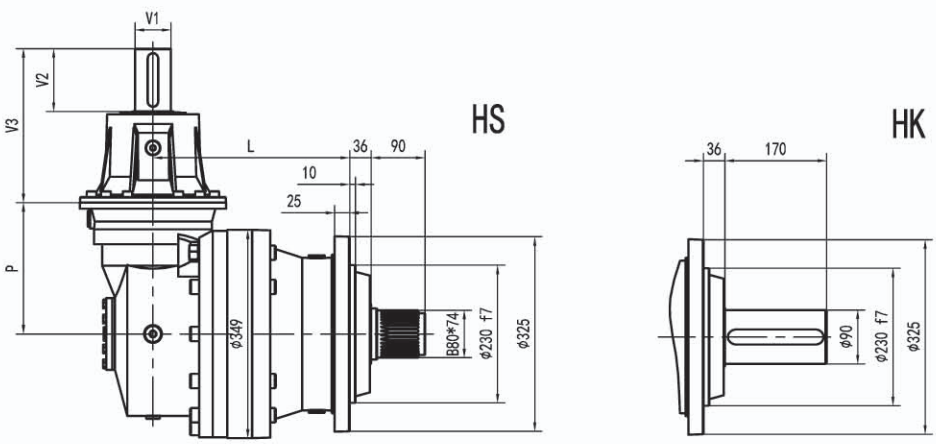
HS
HK
V1
V2
V3
P
L
36
90
10
25
ϕ349
B80*74
ϕ230 f7
ϕ325
170
ϕ90

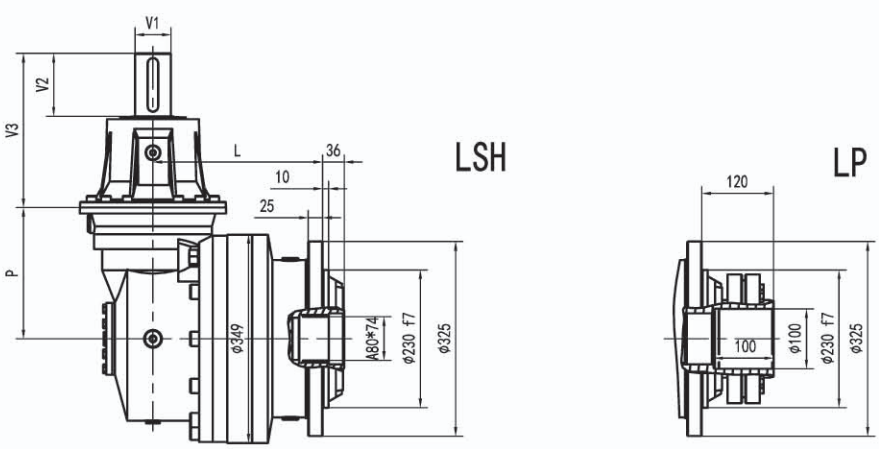
LSH
LP
V1
V2
V3
P
L
36
10
25
ϕ349
A80*74
ϕ230 f7
ϕ325
120
100
ϕ100

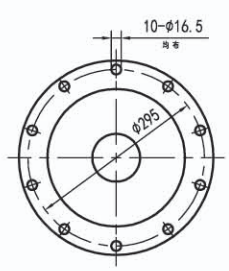
10-ϕ16.5
均布
ϕ295

GTN07 R

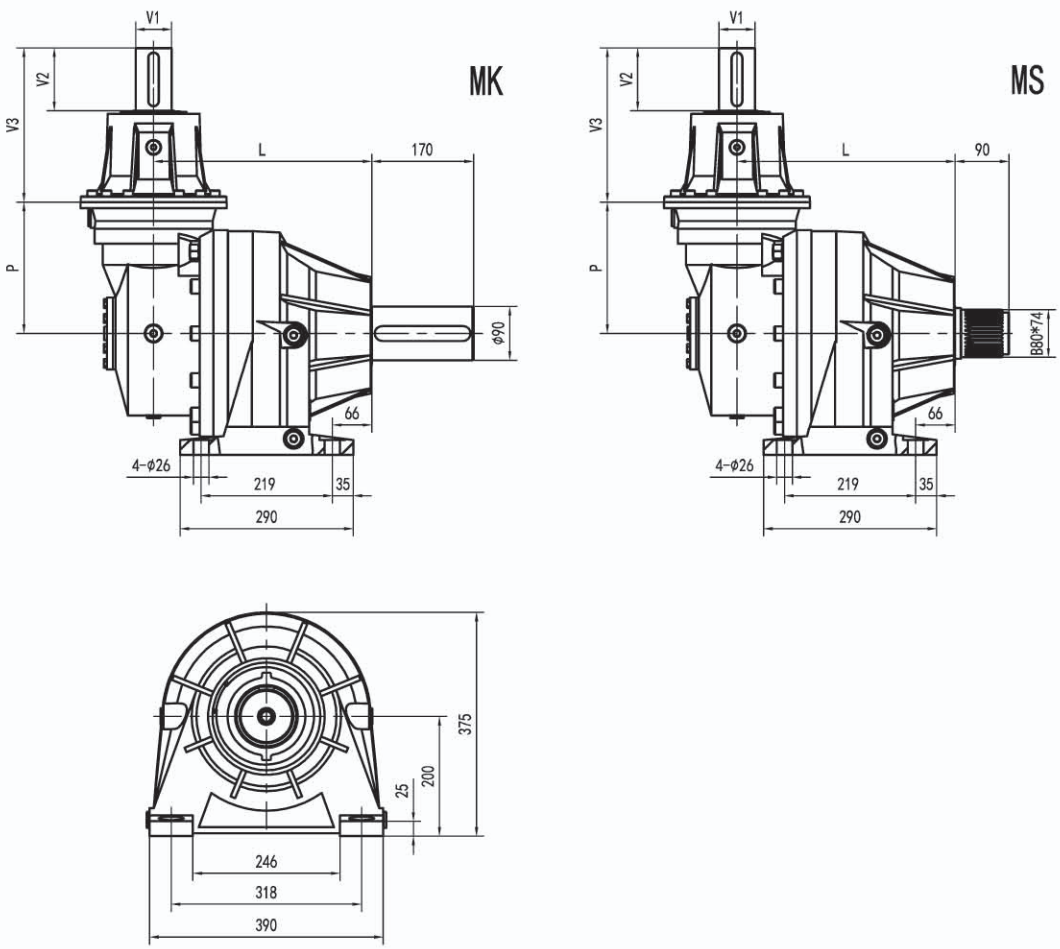

LP输出 LP VERSION	最大输出扭矩 MAX. TRANSMISSIBLE TORQUE	18000 Nm

	L				P	Kg				V1	V2	V3	Kg	V1	V2	V3	Kg
	LS LK	LSH LP	HS HK	MK MS		LS LK	LSH LP	HS HK	MK MS								
GTN07 R2	284	297	329	365	225	145	135	155	170	48	82	239	15				
GTN07 R3	346	317	391	427	140	127	117	137	152	24	36	137.5	6	38	58	158	7
GTN07 R4	411	411	456	492	122	128	118	138	153	24	36	137.5	6	38	58	158	7

GTN07 L - GTN07 R

LK-HK

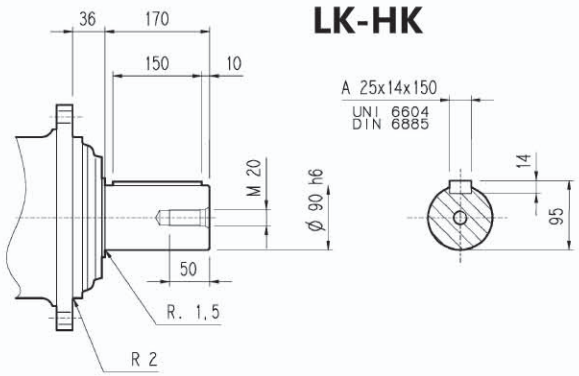

MK

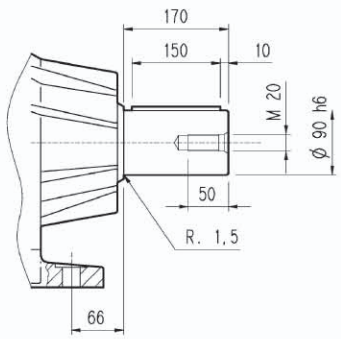

LS-HS

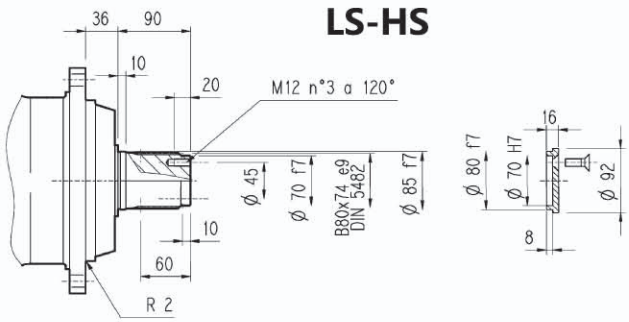

LSH

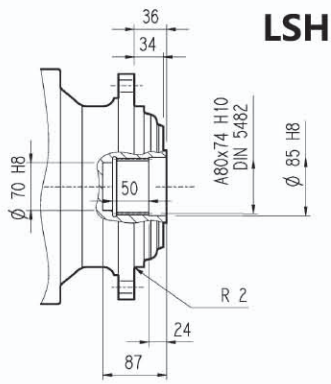

LP

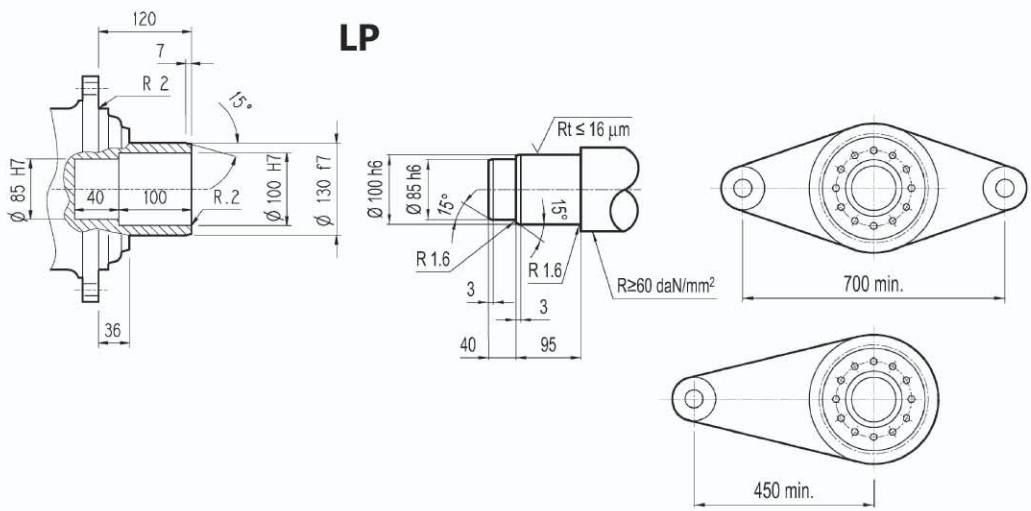

LP输出 LP VERSION	最大输出扭矩 MAX. TRANSMISSIBLE TORQUE	18000 Nm

GTN07 L - GTN07 R

法兰/Flange



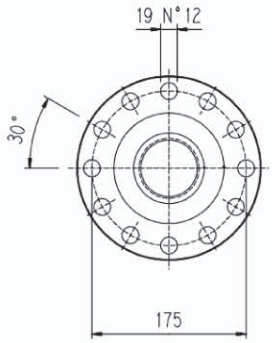

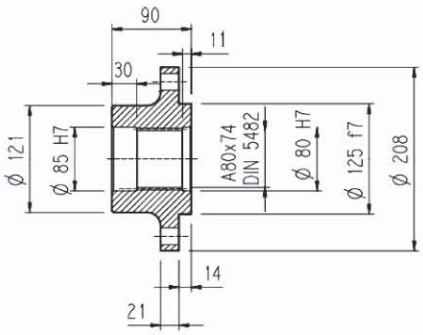

FOA

材料 ：C40
Material : Steel C40

输出齿轮/Output pinions



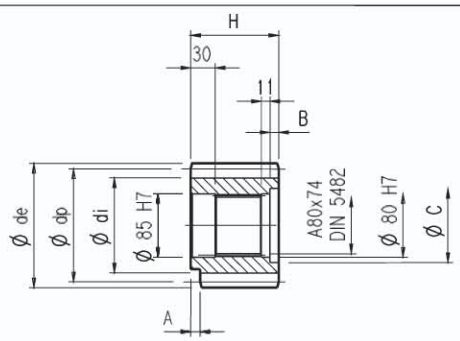

PM...

	m	z	x	dp	di	de	H	A	B	C	☆
PM801	8	16	0.500	128	117	149.5	90	0	0	0	□
PM1001	10	12	0.450	120	104	145	90	0	0	0	□
PM1002	10	14	0.320	140	121	165	116	13	26	95	□
PM1003	10	15	0.150	150	130	171.5	107	20	17	100	□
PM1004	10	16	0.500	160	145	186	90	0	0	0	■
PM1005	10	17	0	170	145	190	90	0	0	0	■
PM1006	10	17	0.500	170	154	198	90	0	0	0	■
PM1201	12	13	0.500	156	138	192	102	0	12	95	□
PM1202	12	14	0.500	168	150	199.2	90	0	0	0	□
PM1203	12	18	0.500	216	198	249.6	107	7	17	95	□
PM1204	12	26	0	312	282	336	90	10	0	0	■

☆	材料 / Material
□	39NiCrMo3 调制钢 Steel 39NiCrMo3 hardened and tempered
■	18NiCrMo5 表面渗碳钢 18NiCrMo5 Case hardened

套筒联轴器/Sleeve couplings



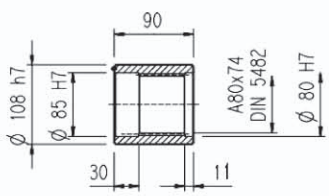

HOS

材料：16CrNi4
Material : Steel 16CrNi4

花键棒料/Splined bars



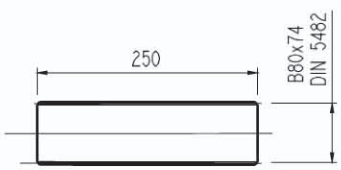

SOF

表面硬化钢18NiCrMo5 NUI5331，表面必须硬化50-55HRC
Case hardening steel 18NiCrMo5 UNI 5331
must be case hardened 50-55 HRC

锁紧盘/Shrink disc



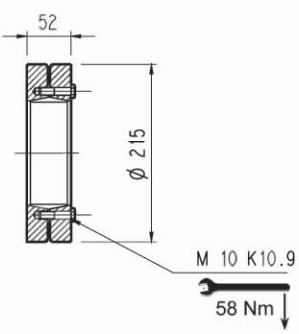

LOP

GTN07 L - GTN07 R

输入轴/Input shaft

S_ _

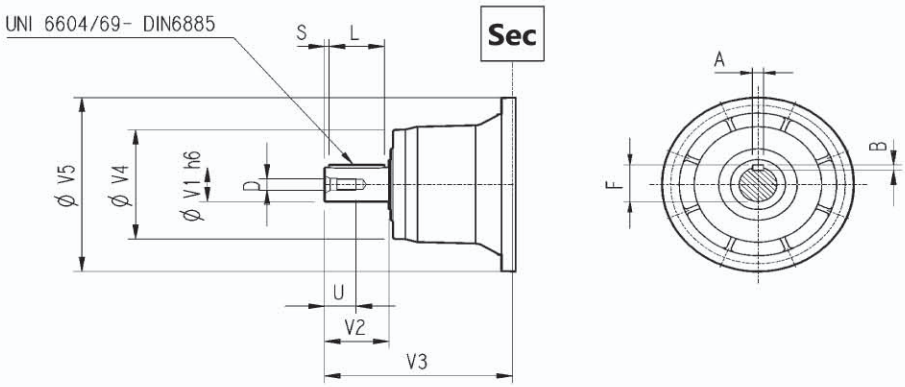

SV_ _

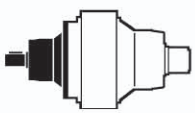

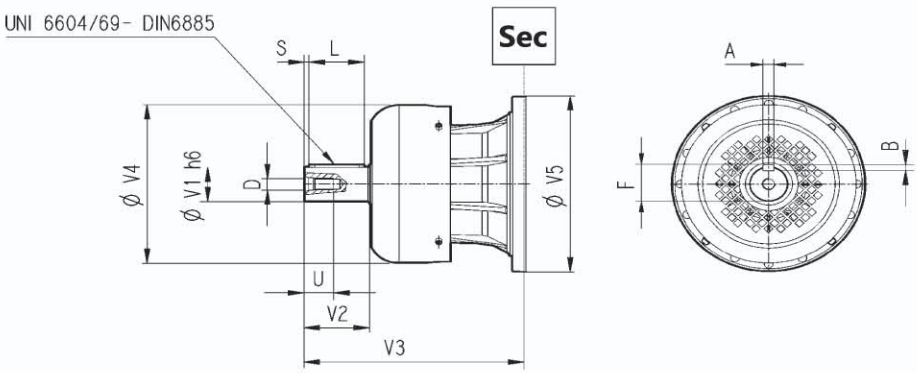

	CODE	V1	V2	V3	V4	V5	A	B	F	L	S	D	U
GTN07 L1	S07B	80	130	315	200	345	22	14	85	110	10	M16	36
	SV07B	80	130	375	347.5	348	22	14	85	110	10	M16	36
	S07A	60	105	313	155	345	18	11	64	90	7.5	M16	36
	SV07A	60	105	363	309	348	18	11	64	90	7.5	M16	36
GTN07 L2	S05B	48	82	239	155	245	14	9	51.5	70	6	M16	36
	SV05B	48	82	276	219.5	244	14	9	51.5	70	6	M16	36
GTN07 L3	S01A	24	36	137.5	120	186	8	7	27	30	3	M8	19
	S01B	38	58	158	120	186	10	8	41	50	4	M12	28
GTN07 L4	S01A	24	36	137.5	120	186	8	7	27	30	3	M8	19
	S01B	38	58	158	120	186	10	8	41	50	4	M12	28
GTN07 R2	S05B	48	82	239	155	245	14	9	51.5	70	6	M16	36
	SV05B	48	82	276	219.5	244	14	9	51.5	70	6	M16	36
GTN07 R3-R4	S01A	24	36	137.5	120	186	8	7	27	30	3	M8	19
	S01B	38	58	158	120	186	10	8	41	50	4	M12	28

无电机输入法兰尺寸
Input dimension without motor adaptor

S_ _

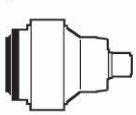

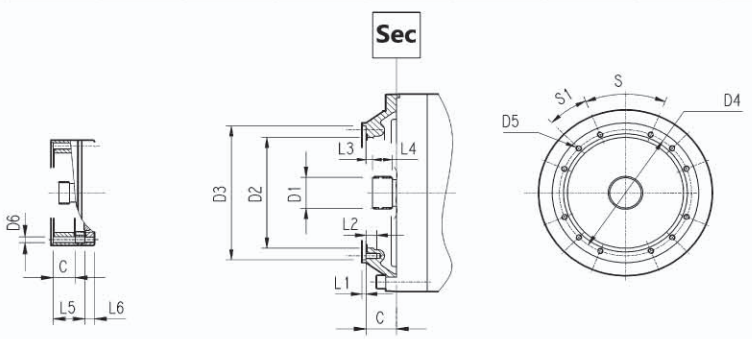

	CODE	C	D1	D2	D3	D4	D5	D6	L1	L2	L3	L4	L5	L6	S	S1	输入 Input
GTN07 L1	S9AB	51	58x53 DIN 5482	195	236 H7	222	M10 n°12	/	4	18	11	22	/	/	45°	22.5°	B
GTN07 L2	S9AA	37	40x36 DIN 5482	140	178 H7	165	M10 n°8	/	4	18	9	18	/	/	45°	45°	A
GTN07 L3	S9AA	37	40x36 DIN 5482	140	178 H7	165	M10 n°8	11	4	/	9	18	65	18	45°	45°	A
GTN07 L4	S9AA	37	40x36 DIN 5482	140	178 H7	165	M10 n°8	11	4	/	9	18	118	18	45°	45°	A
GTN07 R2	S9AA	37	40x36 DIN 5482	140	178 H7	165	M10 n°8	11	4	18	9	18	/	/	45°	45°	A
GTN07 R3-R4	S9AA	37	40x36 DIN 5482	140	178 H7	165	M10 n°8	11	4	/	9	18	37	18	45°	45°	A

GTN07 L - GTN07 R

Fh_2 输出轴允许的径向和轴向载荷
$n_2 \cdot h = 10000$

Permissible radial and axial loadson output shaft with Fh_2
$n_2 \cdot h = 10000$

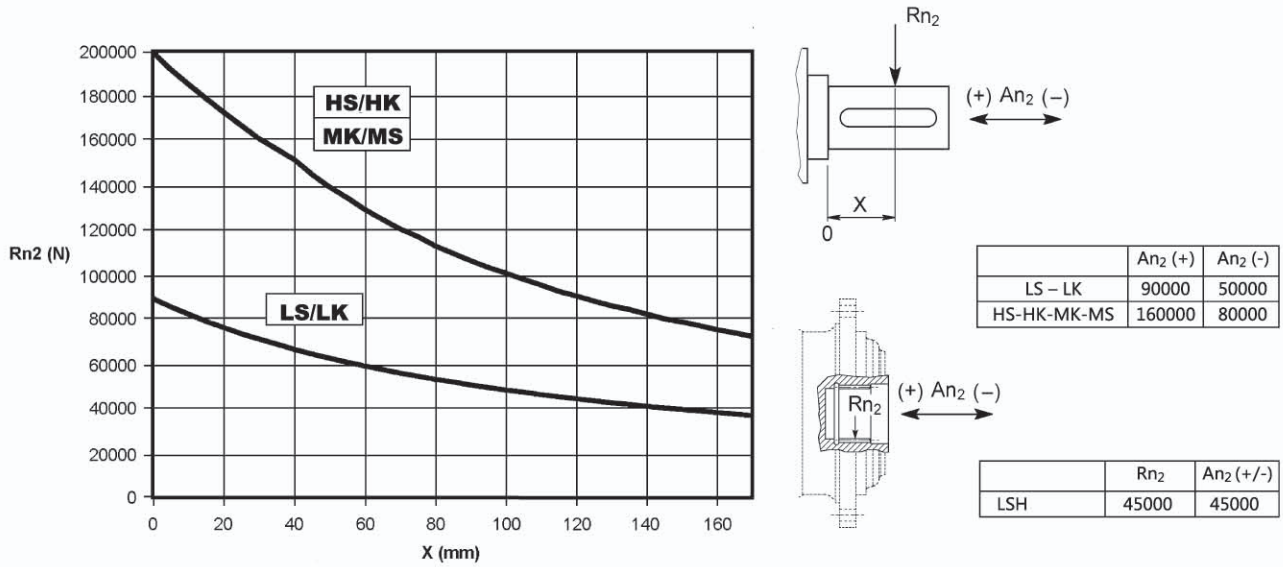

	An_2 (+)	An_2 (-)
LS – LK	90000	50000
HS-HK-MK-MS	160000	80000

	Rn_2	An_2 (+/-)
LSH	45000	45000

轴上的载荷修正系数 fh_2 Load corrective factor fh_2 on shafts	$Fh_2 = n_2 \cdot h$		10000	25000	50000	100000	500000	1000000
	fh_2	LS - LK - LSH	1	0.74	0.58	0.46	0.27	0.21
		HS-HK-MK-MS	1	0.76	0.61	0.50	0.31	0.25

Fh_1 输入轴允许的径向和轴向载荷
n_1 h =250000

Permissible radial loads on input shaft with Fh_1 : n_1 h =250000

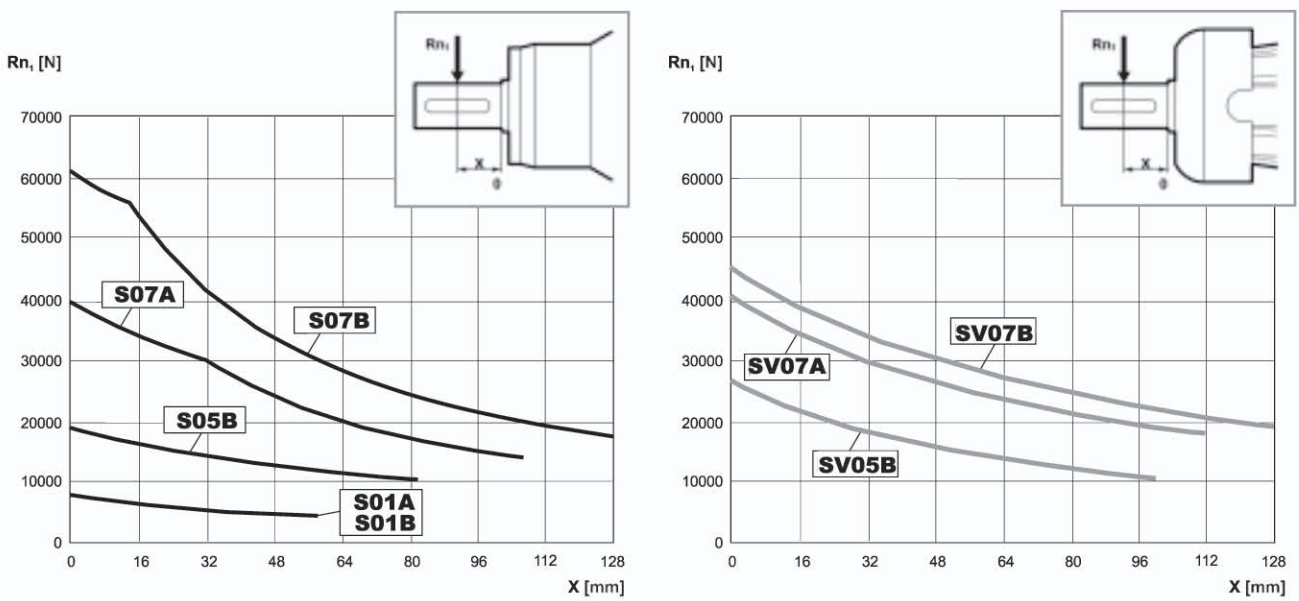

轴上的载荷修正系数fh_1 Load corrective factor fh_1 on shafts	$Fh_1 = n_1 \cdot h$	250000	500000	1000000	2000000	5000000	10000000
	fh_1	1	0.79	0.63	0.50	0.37	0.29

GTN09 L

HS

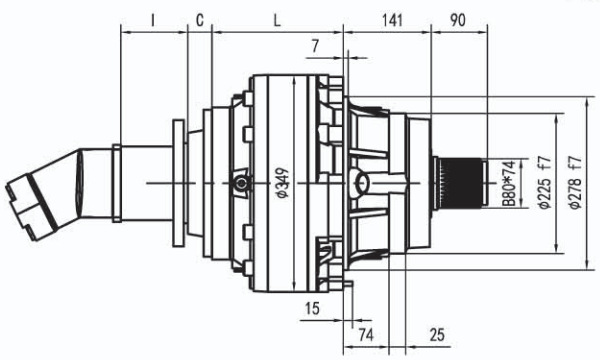

HK

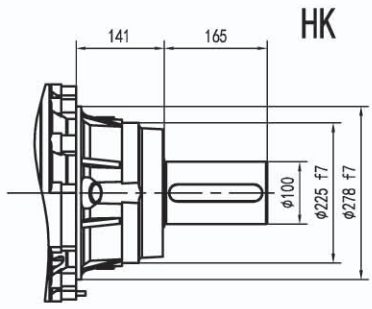

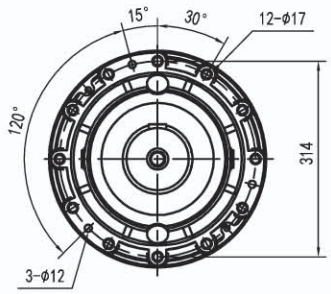

LSH

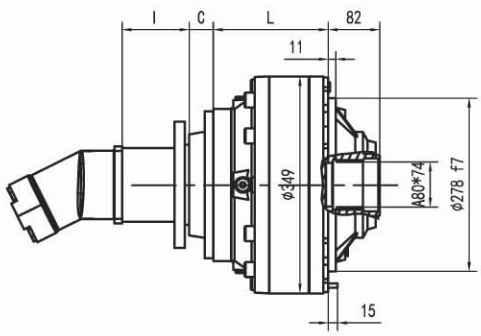

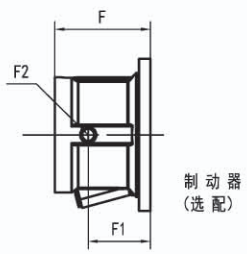

制动器
(选配)

LP

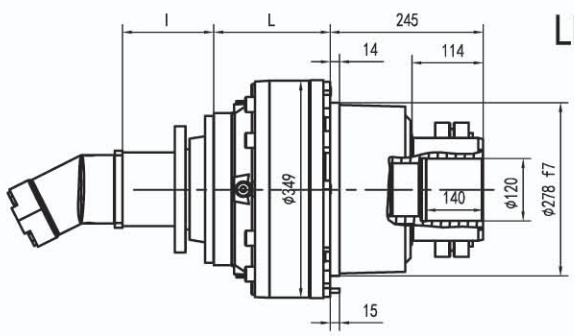

GTN09 L

MK

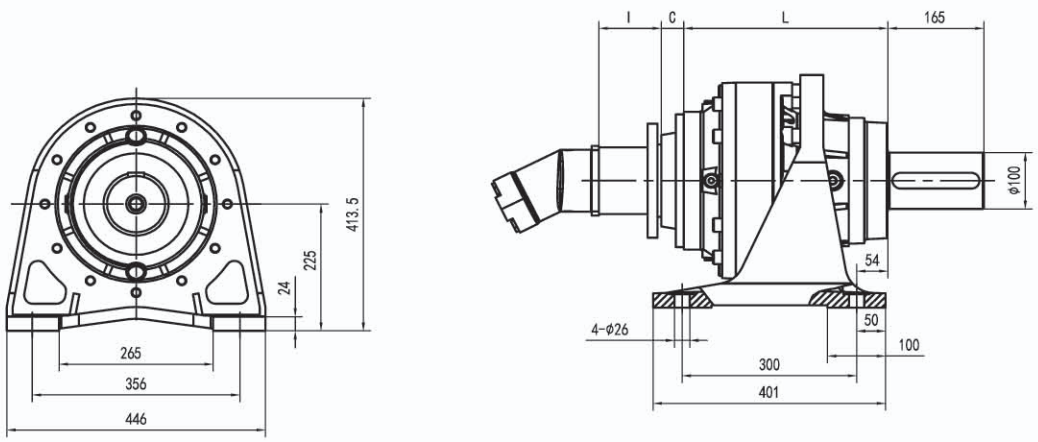

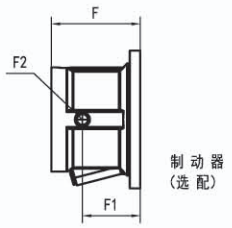

MS

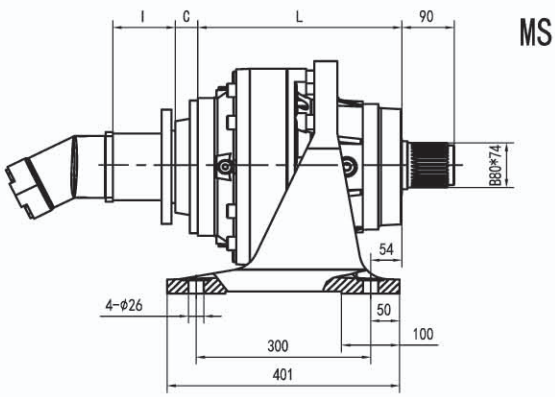

LP输出 LP VERSION	最大输出扭矩 MAX. TRANSMISSIBLE TORQUE	27000 Nm

	L				Kg												
	HS HK	MK MS	LSH	LP	HS HK	MK MS	LSH	LP	C	输入 Input	I	F	F1	F2	类型 Type	输入 Input	Kg
GTN09 L1	126	267	99	101	115	130	95	110	51	B	联系厂家	201	153	1/4 G	6	B	28
GTN09 L2	215	356	188	190	127	142	107	112	37	A		145	95	1/4 G	5	A	16
GTN09 L3	280	421	253	255	134	149	114	119	37	A		105	65	1/4 G	4	A	10
GTN09 L4	333	474	306	308	138	153	118	123	37	A		105	65	1/4 G	4	A	10

GTN09 L

HS

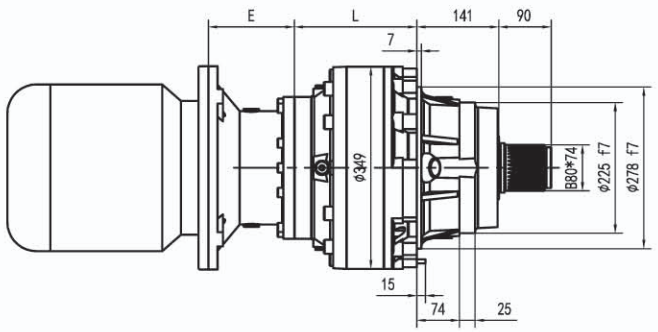

HK

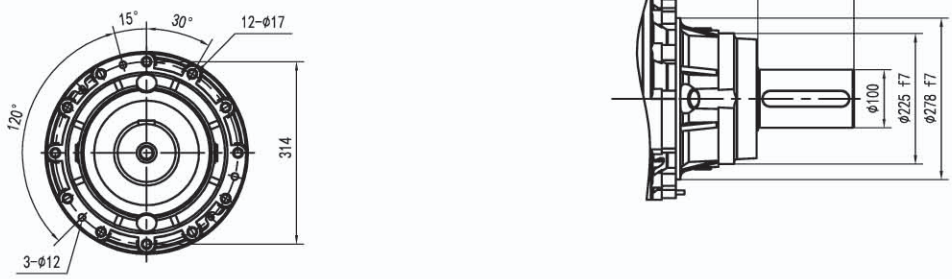

LSH

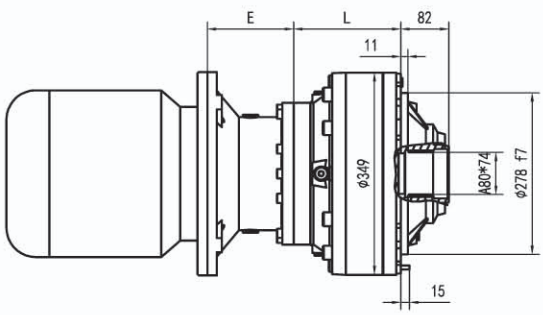

LP

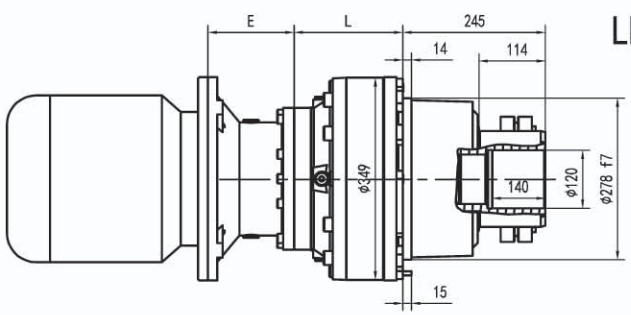

GTN09 L

MK

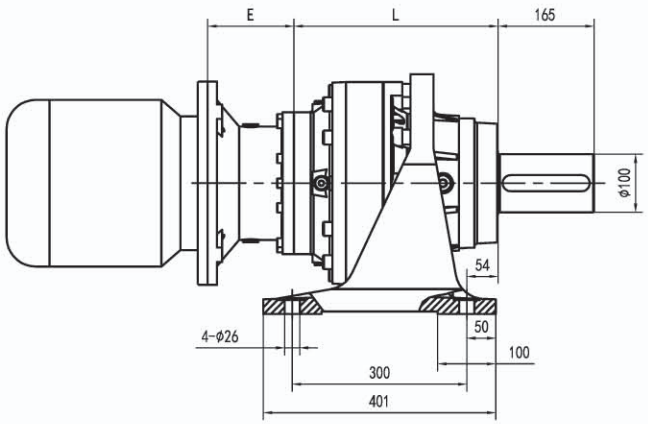

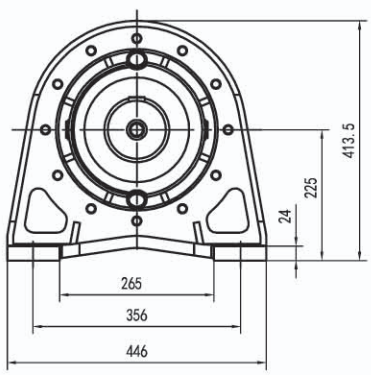

MS

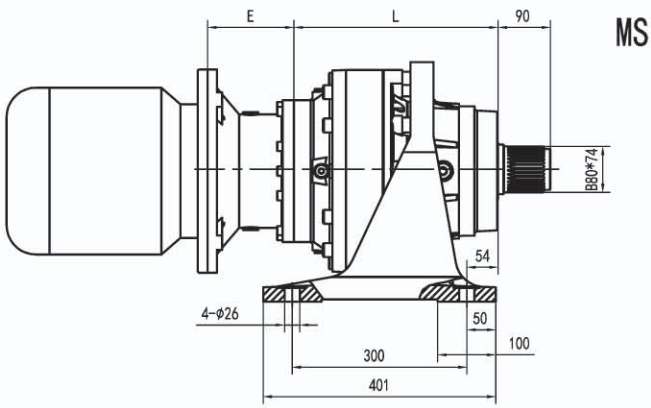

LP输出 LP VERSION	最大输出扭矩 MAX. TRANSMISSIBLE TORQUE	27000 Nm

	L				Kg				E										
	HS HK	MK MS	LSH	LP	HS HK	MK MS	LSH	LP	IEC 71	IEC 80	IEC 90	IEC 100	IEC 112	IEC 132	IEC 160	IEC 180	IEC 200	IEC 225	IEC 250
GTN09 L1	126	267	99	101	115	130	95	110								195	186	216	215
GTN09 L2	215	356	188	190	127	142	107	112						114	144	144	174		
GTN09 L3	280	421	253	255	134	149	114	119	65	84	84	94	94	114	144				
GTN09 L4	333	474	306	308	138	153	118	123	65	84	84	94	94	114	144				

GTN09 L

HS

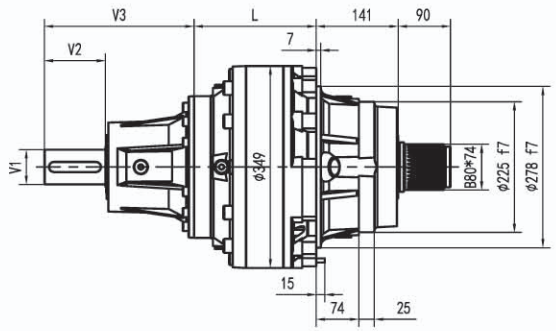

HK

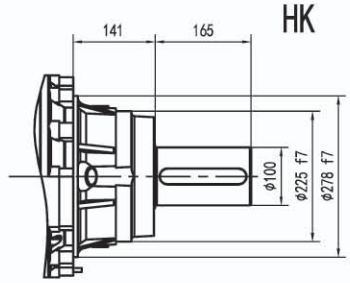

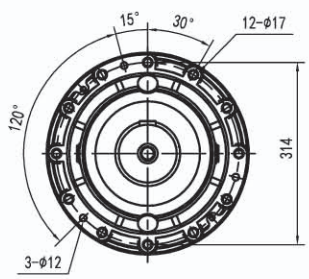

LSH

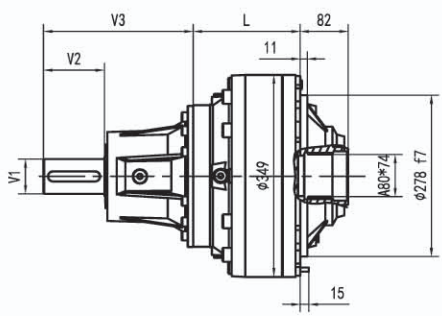

LP

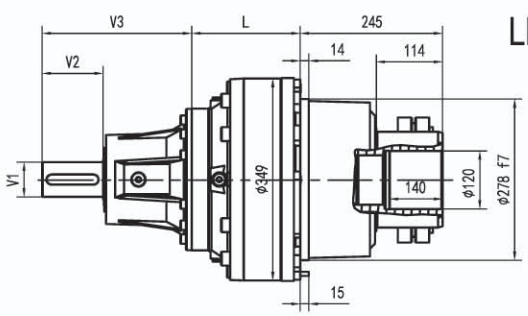

GTN09 L

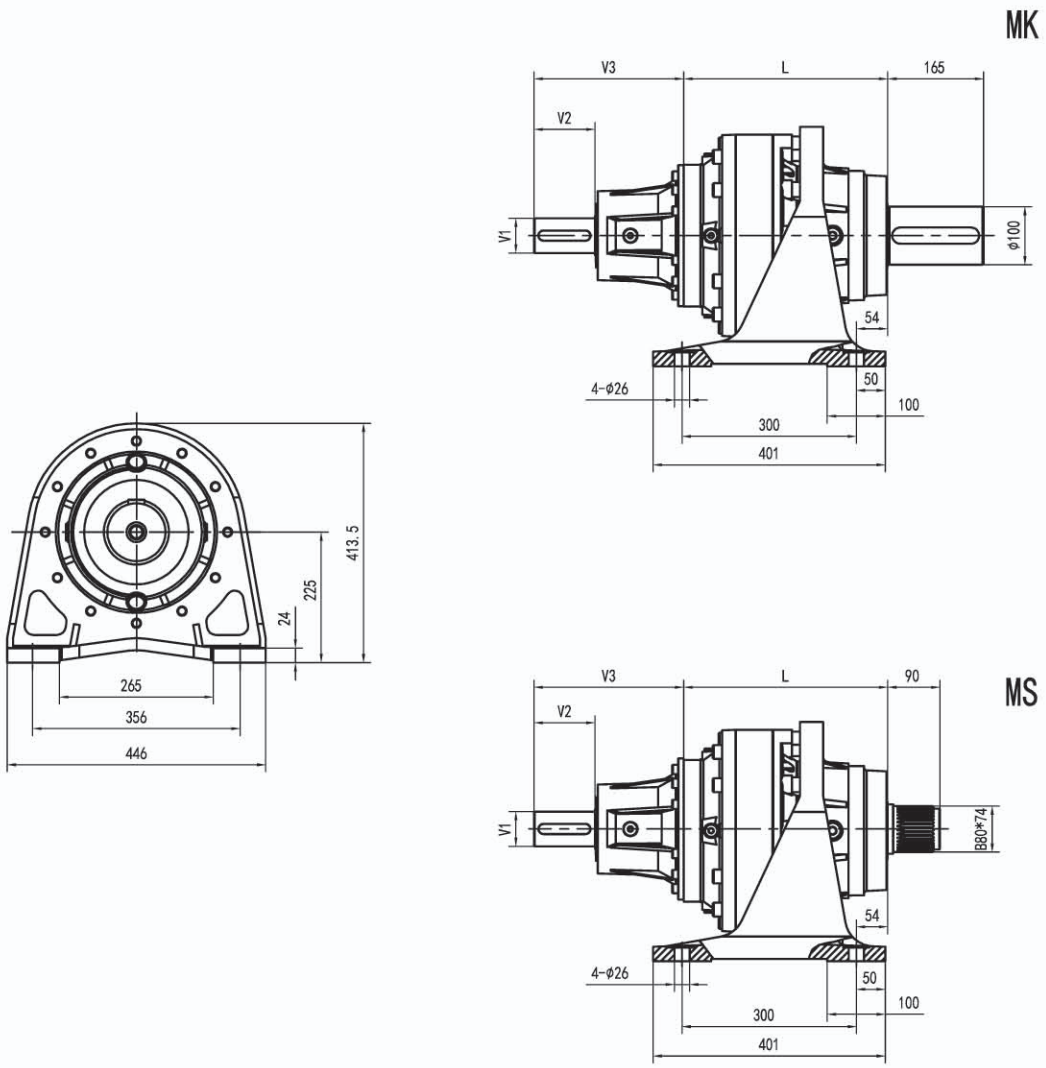

LP输出 LP VERSION	最大输出扭矩 MAX. TRANSMISSIBLE TORQUE	27000 Nm

	L				Kg				V1	V2	V3	Kg	V1	V2	V3	Kg
	HS HK	MK MS	LSH	LP	HS HK	MK MS	LSH	LP								
GTN09 L1	126	267	99	101	115	130	95	110	80	130	315	35	60	105	313	28
GTN09 L2	215	356	188	190	127	142	107	112	48	82	239	15				
GTN09 L3	280	421	253	255	134	149	114	119	24	36	137.5	6	38	58	158	7
GTN09 L4	333	474	306	308	138	153	118	123	24	36	137.5	6	38	58	158	7

GTN09 R

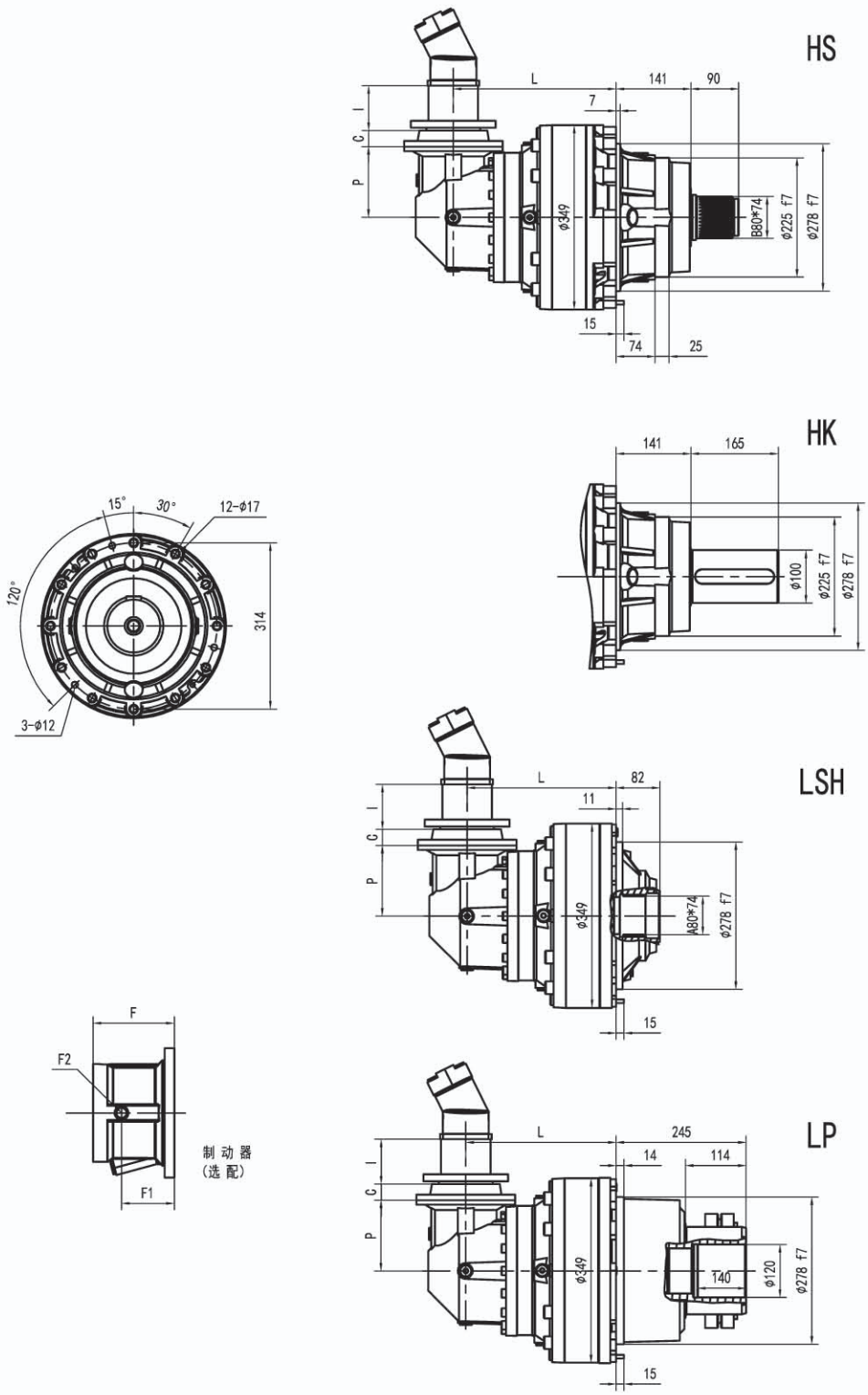
HS
L
141
90
7
I
C
P
φ349
B80*74
φ225 f7
φ278 f7
15
74
25
HK
141
165
φ100
φ225 f7
φ278 f7
15°
30°
12-φ17
120°
314
3-φ12
LSH
L
82
11
I
C
P
φ349
A80*74
φ278 f7
15
F
F2
F1
制 动 器
(选 配)
LP
L
245
14
114
I
C
P
φ349
T40
φ120
φ278 f7
15

GTN09 R

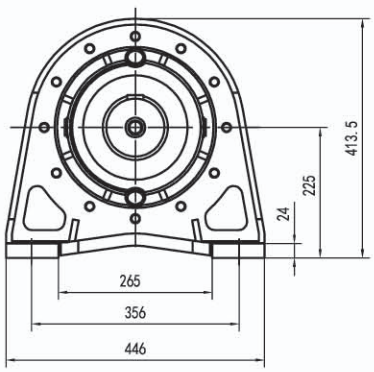

MK

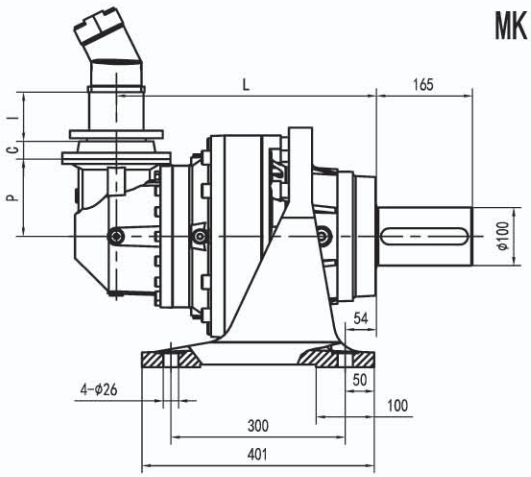

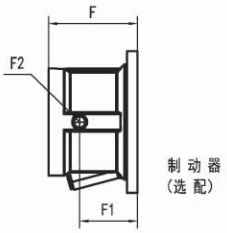

MS

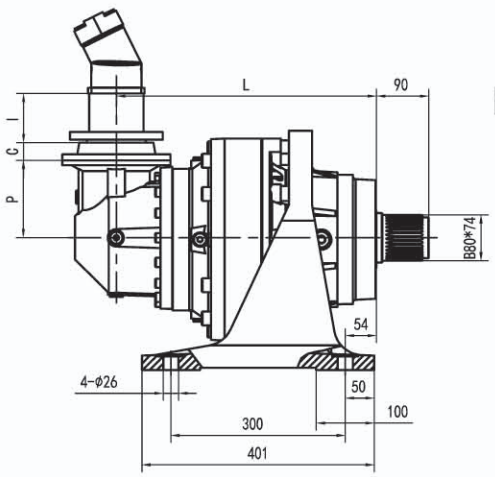

LP输出 LP VERSION	最大输出扭矩 MAX. TRANSMISSIBLE TORQUE	27000 Nm

	L				P	Kg				C	输入 Input	I	F	F1	F2	类型 Type	输入 Input	Kg
	HS HK	MK MS	LSH	LP		HS HK	MK MS	LSH	LP									
GTN09 R2	245	386	218	220	225	165	180	145	150	37	A	联系厂家	145	95	1/4 G	5	A	16
GTN09 R3	307	448	280	282	140	147	162	127	132	37	A		105	65	1/4 G	4	A	10
GTN09 R4	372	513	345	347	122	148	163	128	133	37	A		105	65	1/4 G	4	A	10

GTN09 R

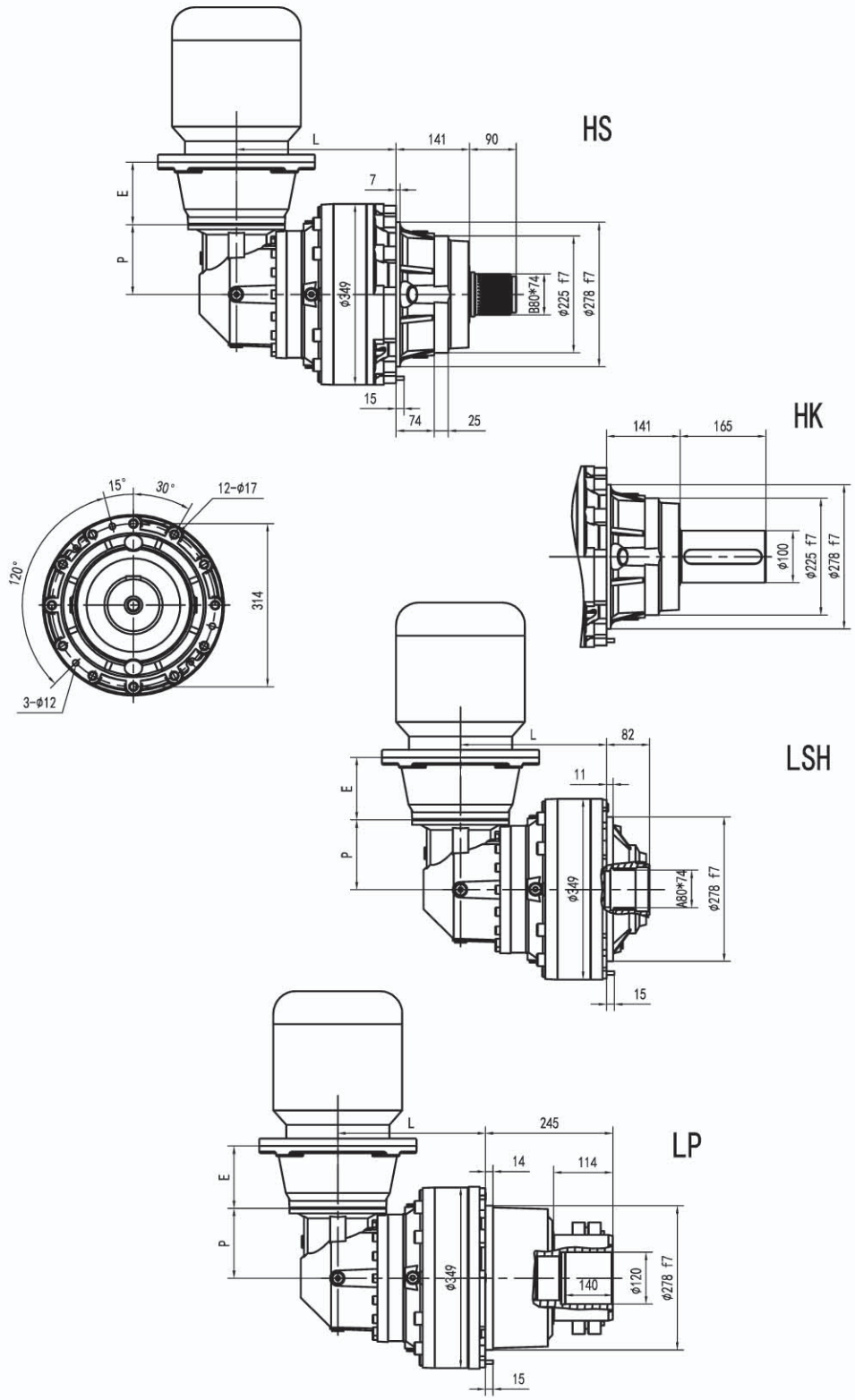
HS
L
141
90
7
E
P
φ349
B80*74
φ225 f7
φ278 f7
15
74
25
HK
141
165
φ100
φ225 f7
φ278 f7
15°
30°
12-φ17
120°
314
3-φ12
LSH
L
82
11
E
P
φ349
A80*74
φ278 f7
15
LP
L
245
14
114
E
P
φ349
140
φ120
φ278 f7
15

GTN09 R

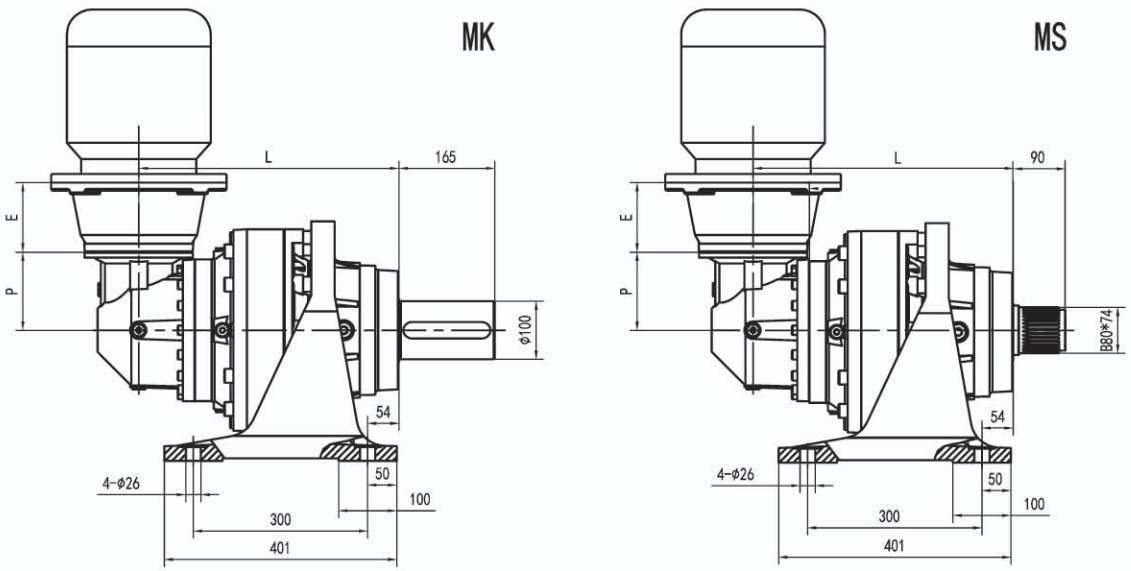

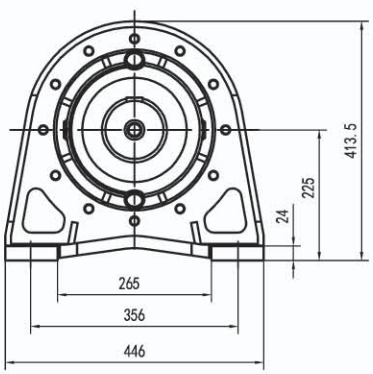

LP输出 LP VERSION	最大输出扭矩 MAX. TRANSMISSIBLE TORQUE	27000 Nm

	L				P	Kg				E								
	HS HK	MK MS	LSH	LP		HS HK	MK MS	LSH	LP	IEC 71	IEC 80	IEC 90	IEC 100	IEC 112	IEC 132	IEC 160	IEC 180	IEC 200
GTN09 R2	245	386	218	220	225	165	180	145	150						114	144	144	174
GTN09 R3	307	448	280	282	140	147	162	127	132	65	84	84	94	94	114	144		
GTN09 R4	372	513	345	347	122	148	163	128	133	65	84	84	94	94	114	144		

GTN09 R

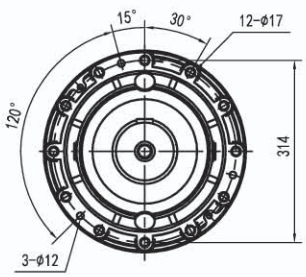
15°
30°
12-φ17
120°
314
3-φ12

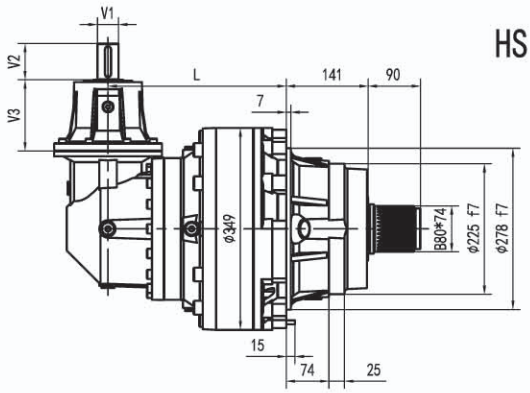
HS
V1
V2
V3
L
141
90
7
φ349
B80*74
φ225 f7
φ278 f7
15
74
25

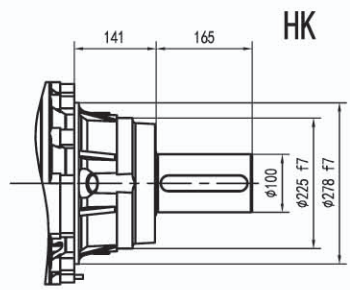
HK
141
165
φ100
φ225 f7
φ278 f7

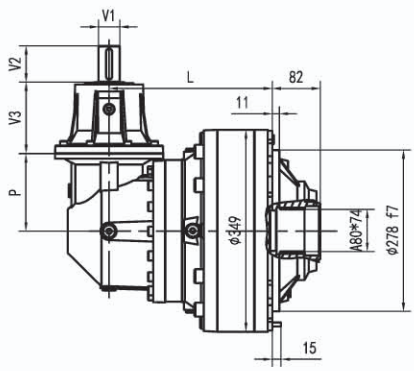
LSH
V1
V2
V3
P
L
82
11
φ349
A80*74
φ278 f7
15

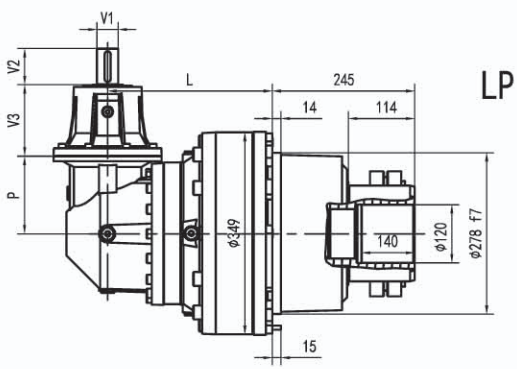
LP
V1
V2
V3
P
L
245
14
114
φ349
140
φ120
φ278 f7
15

GTN09 R

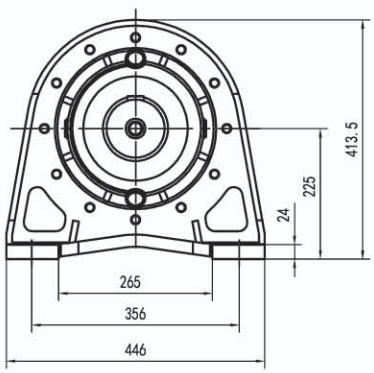

MK

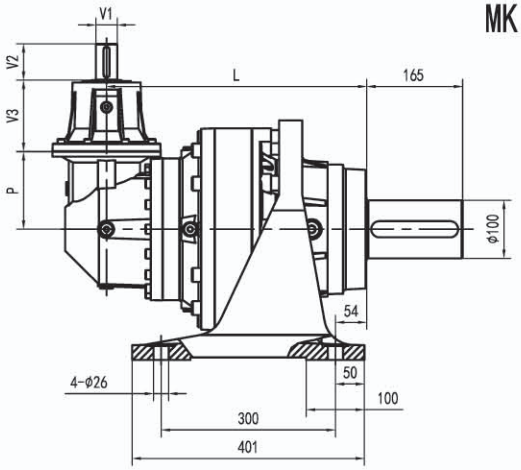

MS

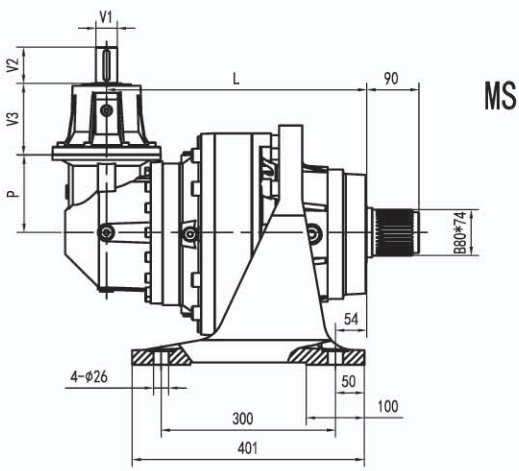

LP输出 LP VERSION	最大输出扭矩 MAX. TRANSMISSIBLE TORQUE	27000 Nm

	L				P	Kg				V1	V2	V3	Kg	V1	V2	V3	Kg
	HS HK	MK MS	LSH	LP		HS HK	MK MS	LSH	LP								
GTN09 R2	245	386	218	220	225	165	180	145	150	48	82	239	15				
GTN09 R3	307	448	280	282	140	147	162	127	132	24	36	137.5	6	38	58	158	7
GTN09 R4	372	513	345	347	122	148	163	128	133	24	36	137.5	6	38	58	158	7

GTN09 L - GTN09 R

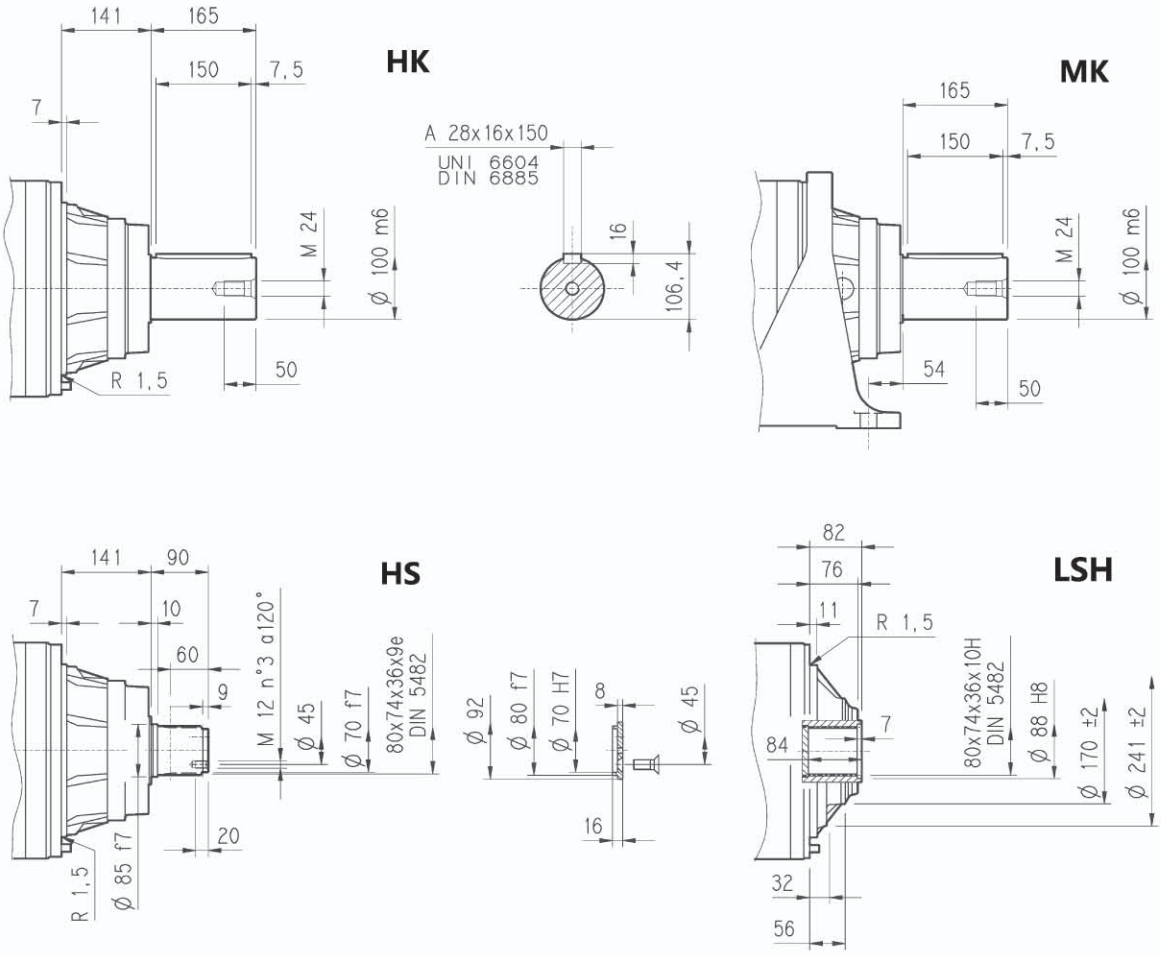

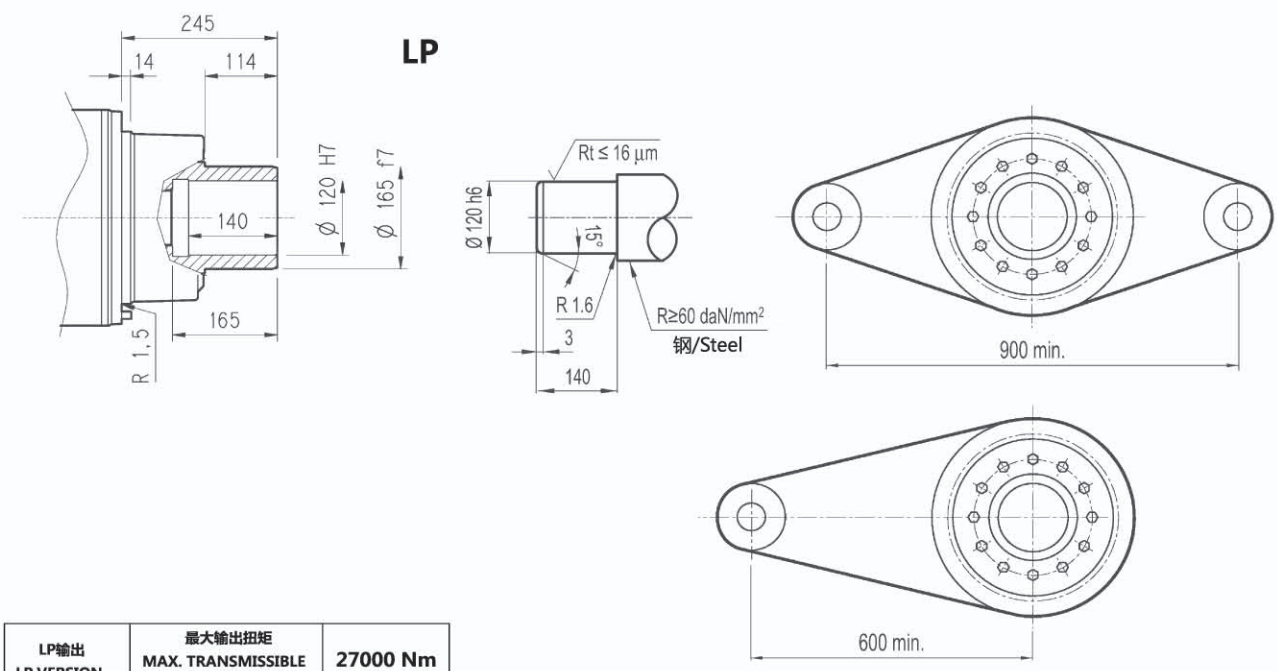

LP输出 LP VERSION	最大输出扭矩 MAX. TRANSMISSIBLE TORQUE	27000 Nm

GTN09 L - GTN09 R

FOA



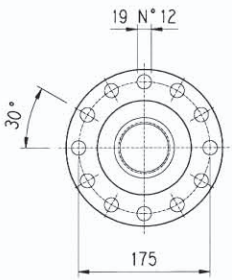

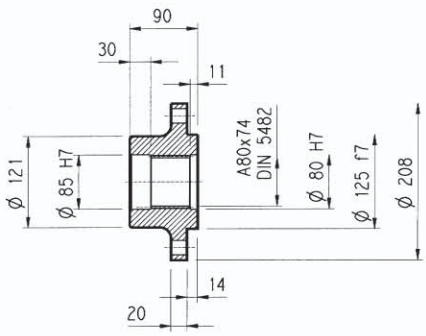

Material : Steel C40

输出齿轮 / Output pinions

PM...



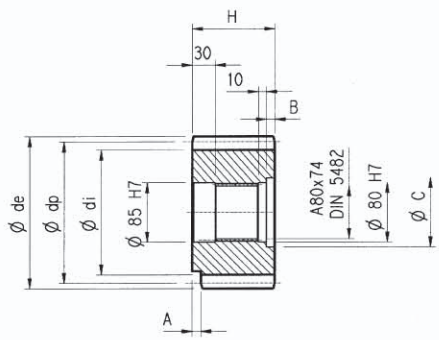

	m	z	x	dp	di	de	H	A	B	C	☆
PM801	8	16	0.500	128	117	149.5	90	0	0	0	□
PM1001	10	12	0.450	120	104	145	90	0	0	0	□
PM1002	10	14	0.320	140	121	165	116	13	26	95	□
PM1003	10	15	0.150	150	130	171.5	107	20	17	100	□
PM1004	10	16	0.500	160	145	186	90	0	0	0	■
PM1005	10	17	0	170	145	190	90	0	0	0	■
PM1006	10	17	0.500	170	154	198	90	0	0	0	■
PM1201	12	13	0.500	156	138	192	102	0	12	95	□
PM1202	12	14	0.500	168	150	199.2	90	0	0	0	□
PM1203	12	18	0.500	216	198	249.6	107	7	17	95	□
PM1204	12	26	0	312	282	336	90	10	0	0	■

☆	材料 / Material
□	39NiCrMo3 调制钢 Steel 39NiCrMo3 hardened and tempered
■	18NiCrMo5 表面渗碳钢 18NiCrMo5 Case hardened

套筒联轴器 / Sleeve couplings

HOS



材料 : 16CrNi4
Material : Steel 16CrNi4

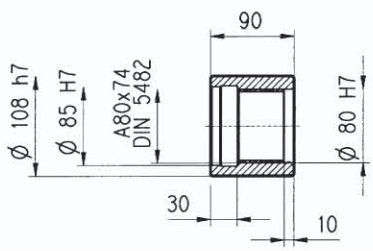

花键 / Splined bars

SOA



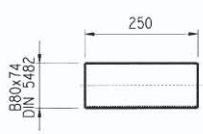

表面硬化钢 18NiCrMo5 UNI 5331 表面硬化必须达到 50-55 HRC
Case hardening steel 18NiCrMo5 UNI 5331
must be case hardened 50-55 HRC

LOP



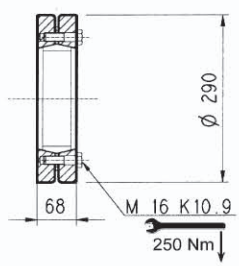

GTN09 L - GTN09 R

输入轴 / Input shaft

S_ _

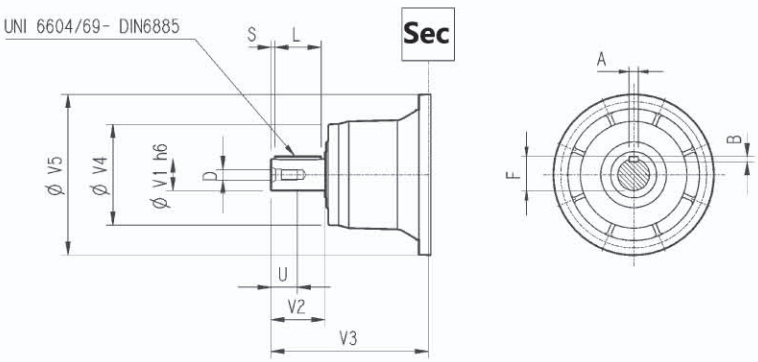

SV_ _

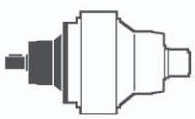

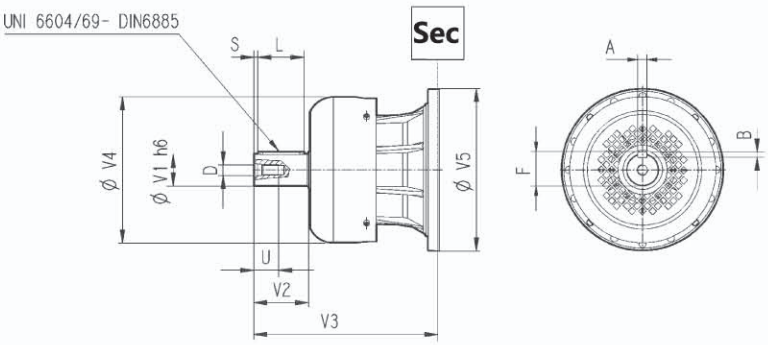

	CODE	V1	V2	V3	V4	V5	A	B	F	L	S	D	U
GTN09 L1	S07B	80	130	315	200	345	22	14	85	110	10	M16	36
	SV07B	80	130	375	347.5	348	22	14	85	110	10	M16	36
	S07A	60	105	313	155	345	18	11	64	90	7.5	M16	36
	SV07A	60	105	363	309	348	18	11	64	90	7.5	M16	36
GTN09 L2	S05B	48	82	239	155	245	14	9	51.5	70	6	M16	36
	SV05B	48	82	276	219.5	244	14	9	51.5	70	6	M16	36
GTN09 L3	S01A	24	36	137.5	120	186	8	7	27	30	3	M8	19
	S01B	38	58	158	120	186	10	8	41	50	4	M12	28
GTN09 L4	S01A	24	36	137.5	120	186	8	7	27	30	3	M8	19
	S01B	38	58	158	120	186	10	8	41	50	4	M12	28
GTN09 R2	S05B	48	82	239	155	245	14	9	51.5	70	6	M16	36
	SV05B	48	82	276	219.5	244	14	9	51.5	70	6	M16	36
GTN09 R3-R4	S01A	24	36	137.5	120	186	8	7	27	30	3	M8	19
	S01B	38	58	158	120	186	10	8	41	50	4	M12	28

不带电机的输入法兰尺寸
Input dimension without motor adaptor

S_ _

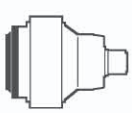

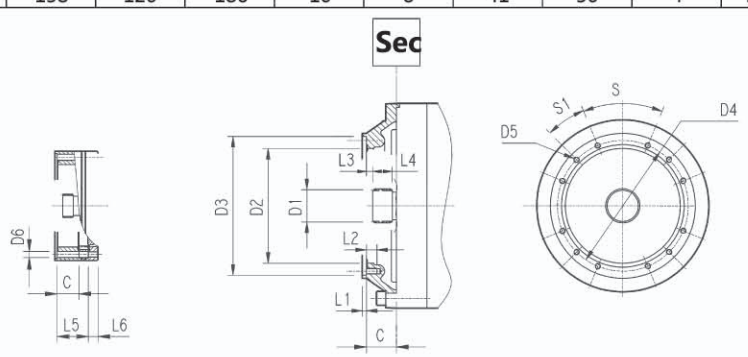

	CODE	C	D1	D2	D3	D4	D5	D6	L1	L2	L3	L4	L5	L6	S	S1	输入 Input
GTN09 L1	S9AB	51	58x53 DIN 5482	195	236 H7	222	M10 n°12	/	4	18	11	22	/	/	45°	22.5°	B
GTN09 L2	S9AA	37	40x36 DIN 5482	140	178 H7	165	M10 n°8	/	4	18	9	18	/	/	45°	45°	A
GTN09 L3	S9AA	37	40x36 DIN 5482	140	178 H7	165	M10 n°8	11	4	/	9	18	65	18	45°	45°	A
GTN09 L4	S9AA	37	40x36 DIN 5482	140	178 H7	165	M10 n°8	11	4	/	9	18	118	18	45°	45°	A
GTN09 R2	S9AA	37	40x36 DIN 5482	140	178 H7	165	M10 n°8	11	4	18	9	18	/	/	45°	45°	A
GTN09 R3-R4	S9AA	37	40x36 DIN 5482	140	178 H7	165	M10 n°8	11	4	/	9	18	37	18	45°	45°	A

GTN09 L - GTN09 R

输出轴上允许的径向和轴向载荷
$Fh_2 : n_2 \cdot h = 10000$

Permissible radial and axial loadson output shaft with
$Fh_2\ n_2 \cdot h = 10000$

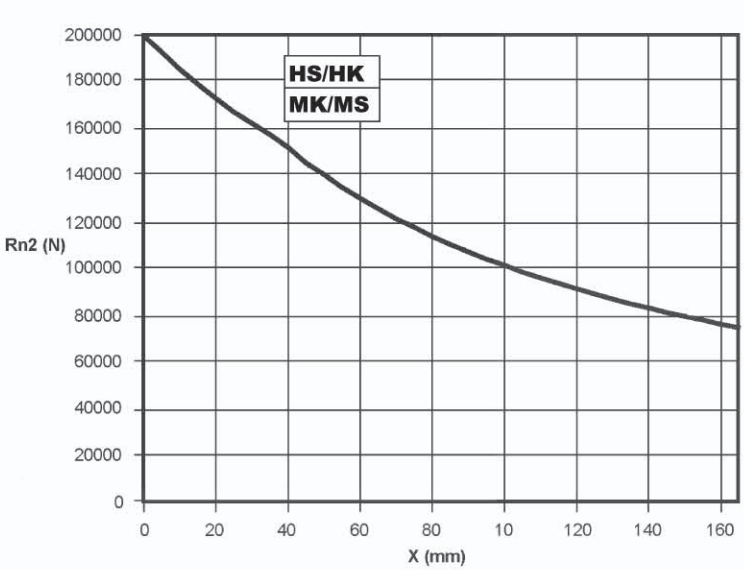

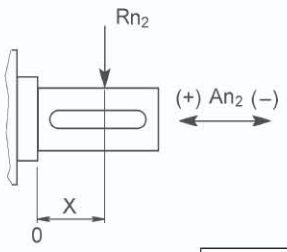

	An2 (+)	An2 (-)
HS - HK - MK - MS	160000	80000

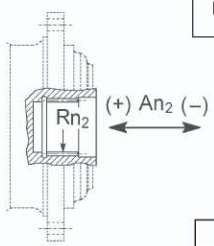

	Rn2	An2 (+/-)
LSH	36000	37000

轴上的载荷修正系数 fh_2 Load corrective factor fh_2 on shafts	$Fh_2 = n_2 \cdot h$		10000	25000	50000	100000	500000	1000000
	fh_2	MZ - MC - FZ	1	0.74	0.58	0.46	0.27	0.21
		HS - HK - MK - MS	1	0.76	0.61	0.50	0.31	0.25

输入轴上允许的径向和轴向载荷
$n_1 \cdot h = 250000$

Permissible radial loads on inputshaft with $Fh_1 : n_1 \cdot h = 250000$

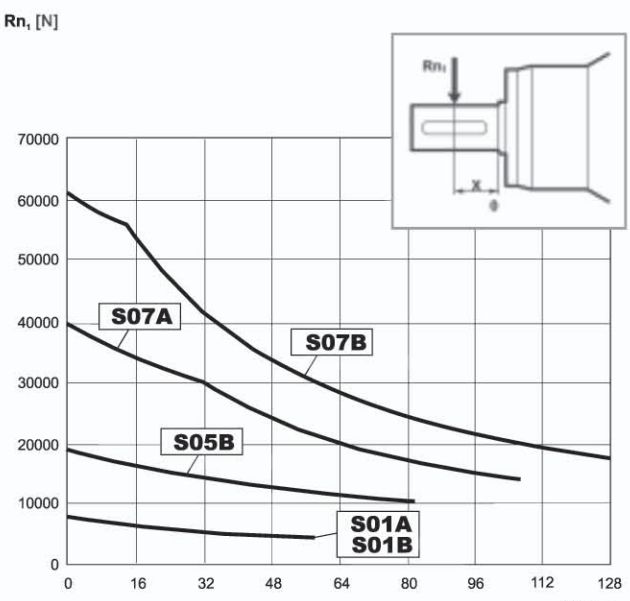

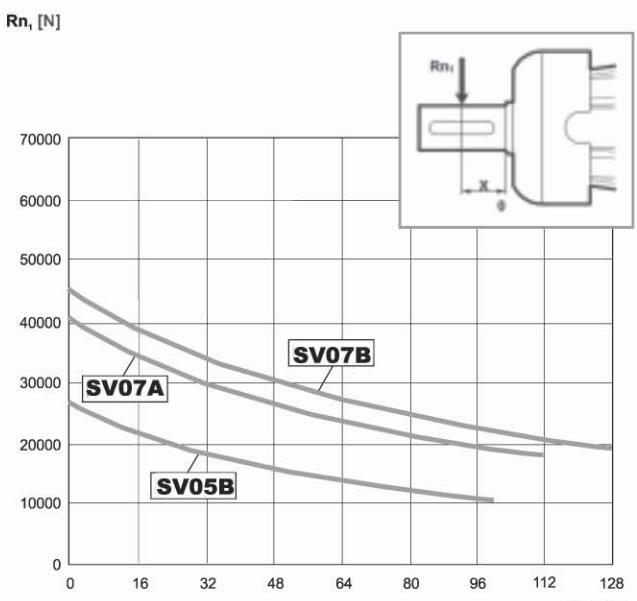

轴上的载荷修正系数 fh_1 Load corrective factor fh_1 on shafts	$Fh_1 = n_1 \cdot h$	250000	500000	1000000	2000000	5000000	10000000
	fh_1	1	0.79	0.63	0.50	0.37	0.29

GTN10 L

HS

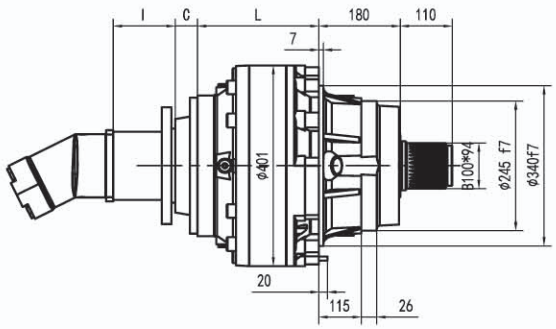

HK

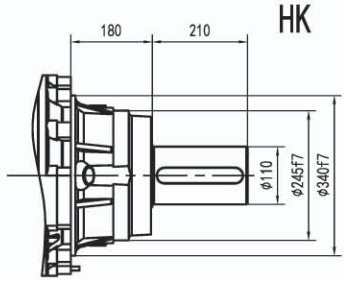

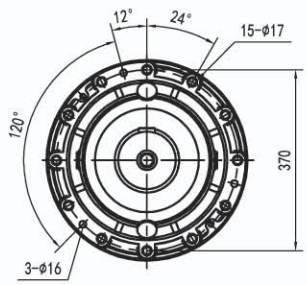

LSH

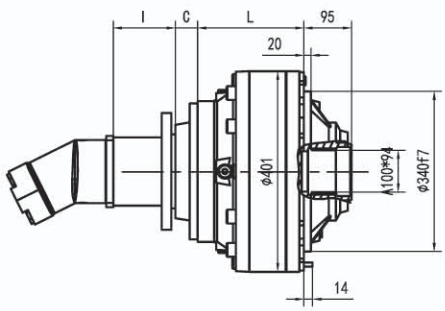

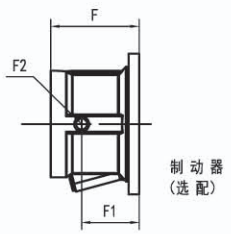

LP

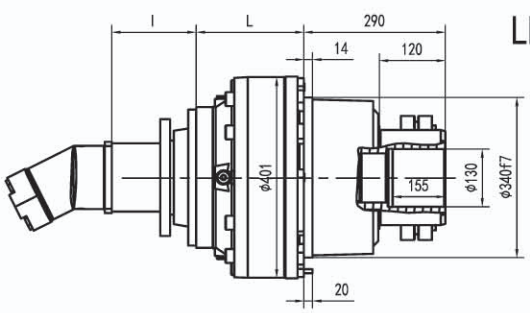

GTN10 L

MK

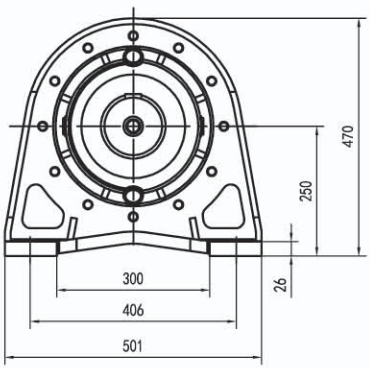

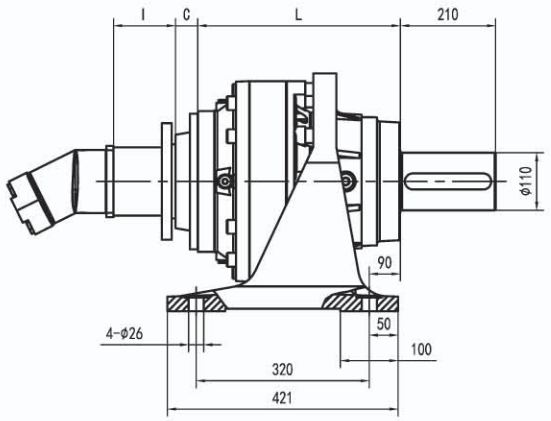

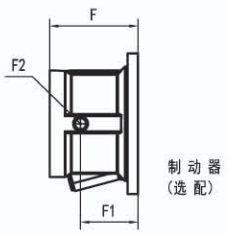

MS

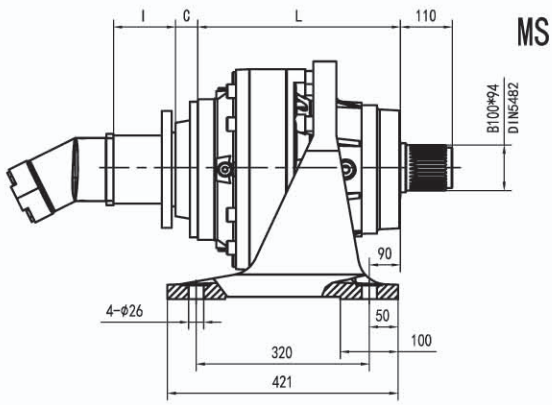

LP输出 LP VERSION	最大输出扭矩 MAX. TRANSMISSIBLE TORQUE	36000 Nm

	L				Kg												
	HS HK	MK MS	LSH	LP	HS HK	MK MS	LSH	LP	C	输入 Input	I	F	F1	F2	类型 Type	输入 Input	Kg
GTN10 L1	108	288	88	88	135	155	110	115	88	C	联系厂家						
GTN10 L2	244	424	224	224	165	185	140	145	45	B		195	147	1/4 G	6	B	28
GTN10 L3	309	489	289	289	174	194	149	154	37	A		145	95	1/4 G	5	A	16
GTN10 L4	362	542	342	342	178	198	153	158	37	A		105	65	1/4 G	4	A	10

GTN10 L

HS

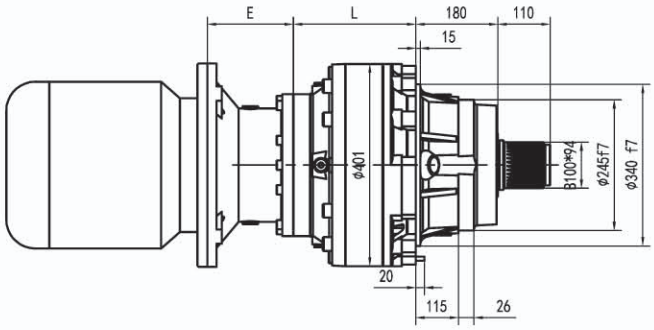

HK

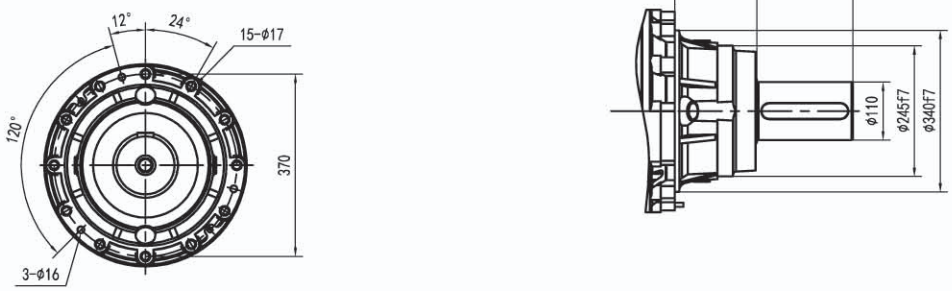

LSH

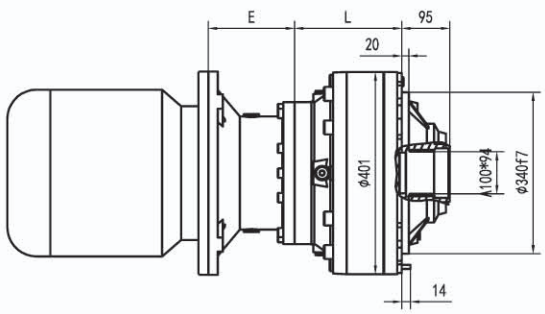

LP

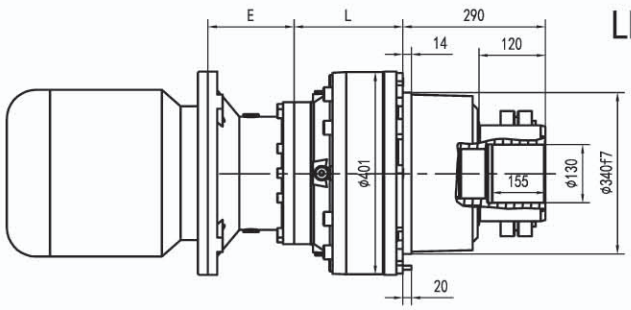

GTN10 L

MK

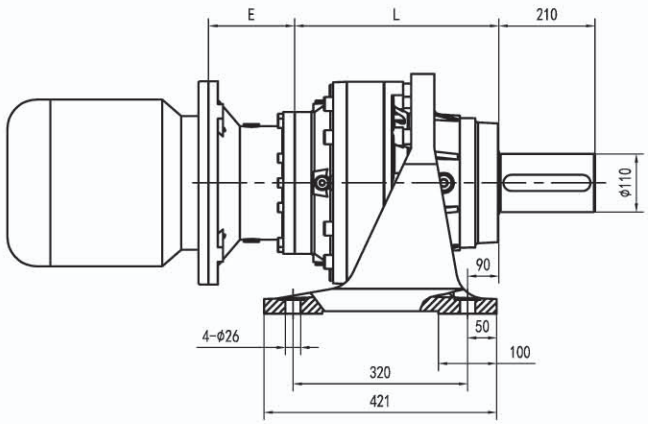

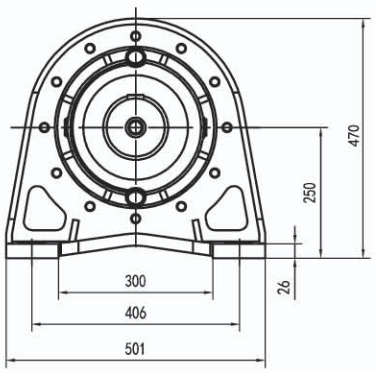

MS

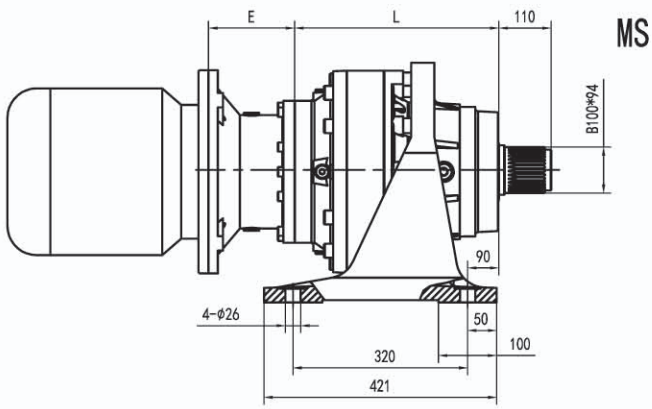

LP输出 LP VERSION	最大输出扭矩 MAX. TRANSMISSIBLE TORQUE	36000 Nm

	L				Kg				E										
	HS HK	MK MS	LSH	LP	HS HK	MK MS	LSH	LP	IEC 71	IEC 80	IEC 90	IEC 100	IEC 112	IEC 132	IEC 160	IEC 180	IEC 200	IEC 225	IEC 250
GTN10 L1	108	288	88	88	135	155	110	115									271	301	281
GTN10 L2	244	424	224	224	165	185	140	145								152	182		
GTN10 L3	309	489	289	289	174	194	149	154						114	144	114	114		
GTN10 L4	362	542	342	342	178	198	153	158	65	84	84	94	94	114	144				

GTN10 L

HS

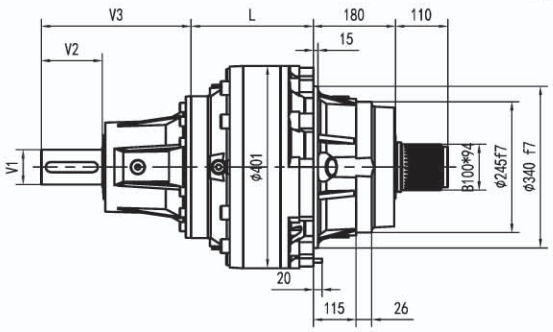

HK

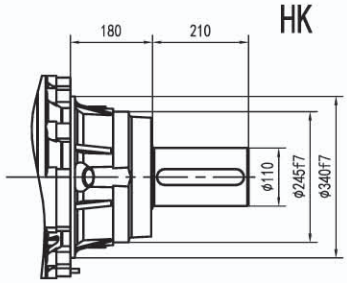

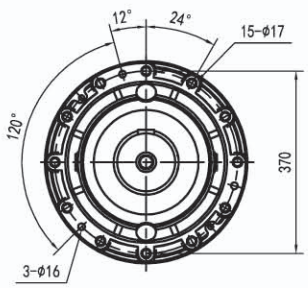

LSH

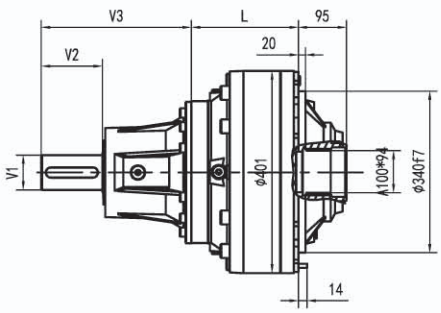

LP

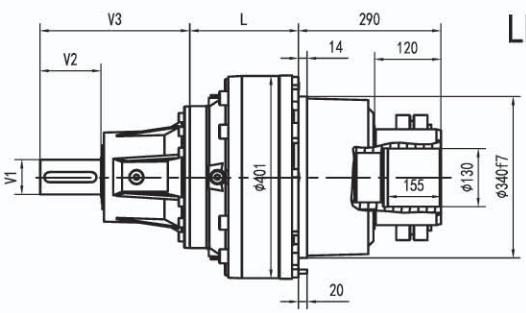

GTN10 L

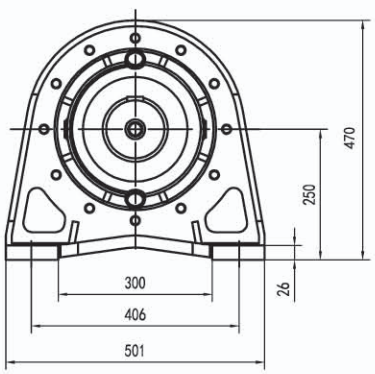

MK

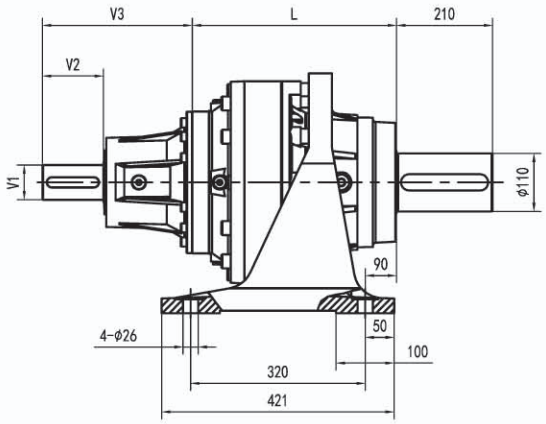

MS

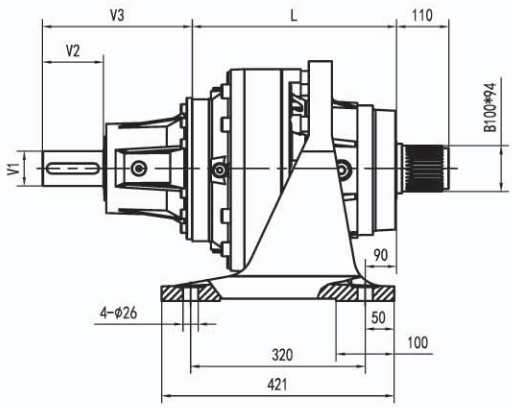

LP输出 LP VERSION	最大输出扭矩 MAX. TRANSMISSIBLE TORQUE	36000 Nm

	L				Kg				V1	V2	V3	Kg	V1	V2	V3	Kg
	HS HK	MK MS	LSH	LP	HS HK	MK MS	LSH	LP								
GTN10 L1	108	288	88	88	135	155	110	115	80	130	377	50				
GTN10 L2	244	424	224	224	165	185	140	145	60	105	307	23				
GTN10 L3	309	489	289	289	174	194	149	154	48	82	239	15				
GTN10 L4	362	542	342	342	178	198	153	158	24	36	137.5	6	38	58	158	7

GTN10 R

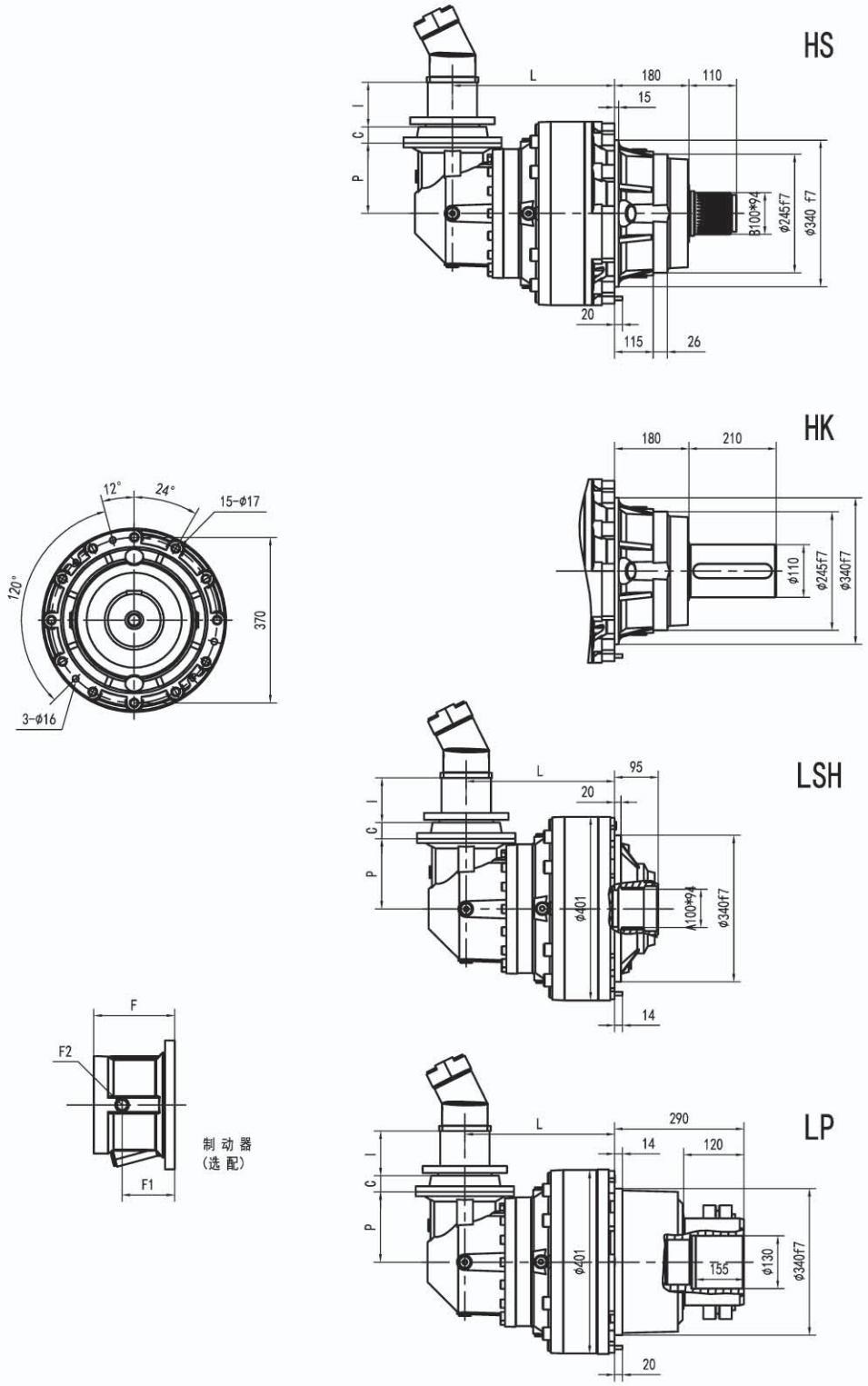
HS
L
180
110
15
I
C
P
B100*94
Φ245F7
Φ340 F7
20
115
26
HK
180
210
Φ110
Φ245F7
Φ340F7
12°
24°
15-Φ17
120°
370
3-Φ16
LSH
L
95
20
I
C
P
Φ401
B100*94
Φ340F7
14
F
F2
F1
制动器
(选配)
LP
L
290
14
120
I
C
P
Φ401
155
Φ130
Φ340F7
20

GTN10 R

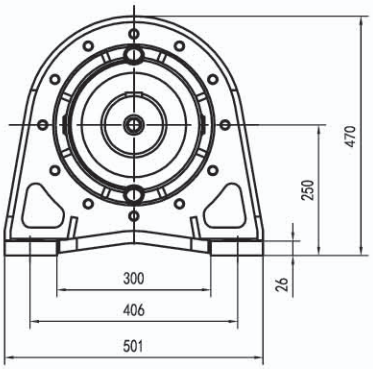

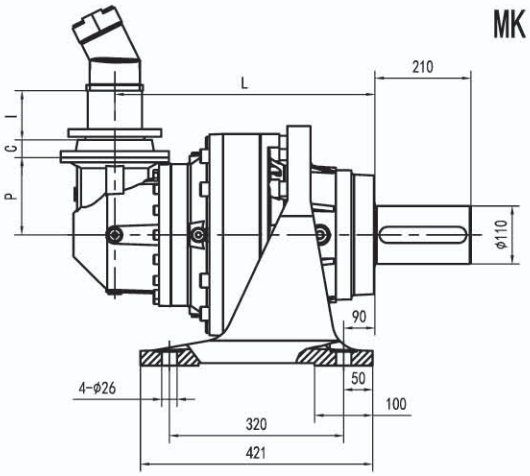

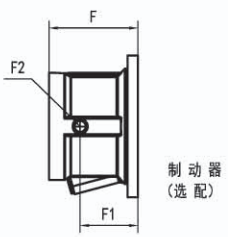

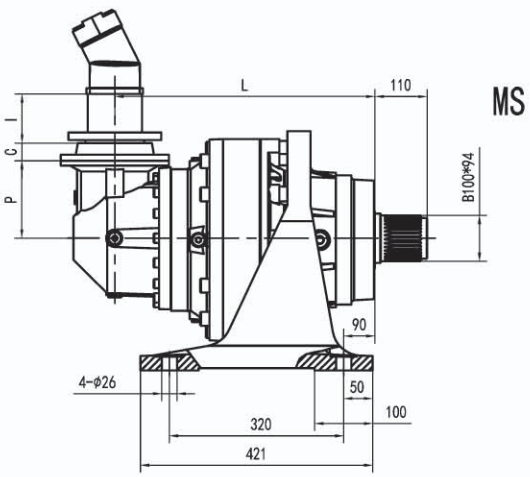

LP输出 LP VERSION	最大输出扭矩 MAX. TRANSMISSIBLE TORQUE	36000 Nm

	L				P	Kg						I						Kg
	HS HK	MK MS	LSH	LP		HS HK	MK MS	LSH	LP	C	输入 Input		F	F1	F2	类型 Type	输入 Input	
GTN10 R2(B)	305	485	285	285	345	260	280	240	250	45	B	联系厂家	195	147	1/4 G	6	B	28
GTN10 R2(C)	333	513	313	313	390	280	300	260	270	45	B		195	147	1/4 G	6	B	28
GTN10 R3	381	561	361	361	140	189	209	164	169	37	A		105	65	1/4 G	4	A	10
GTN10 R4	401	581	381	381	140	194	214	169	174	37	A		105	65	1/4 G	4	A	10

GTN10 R

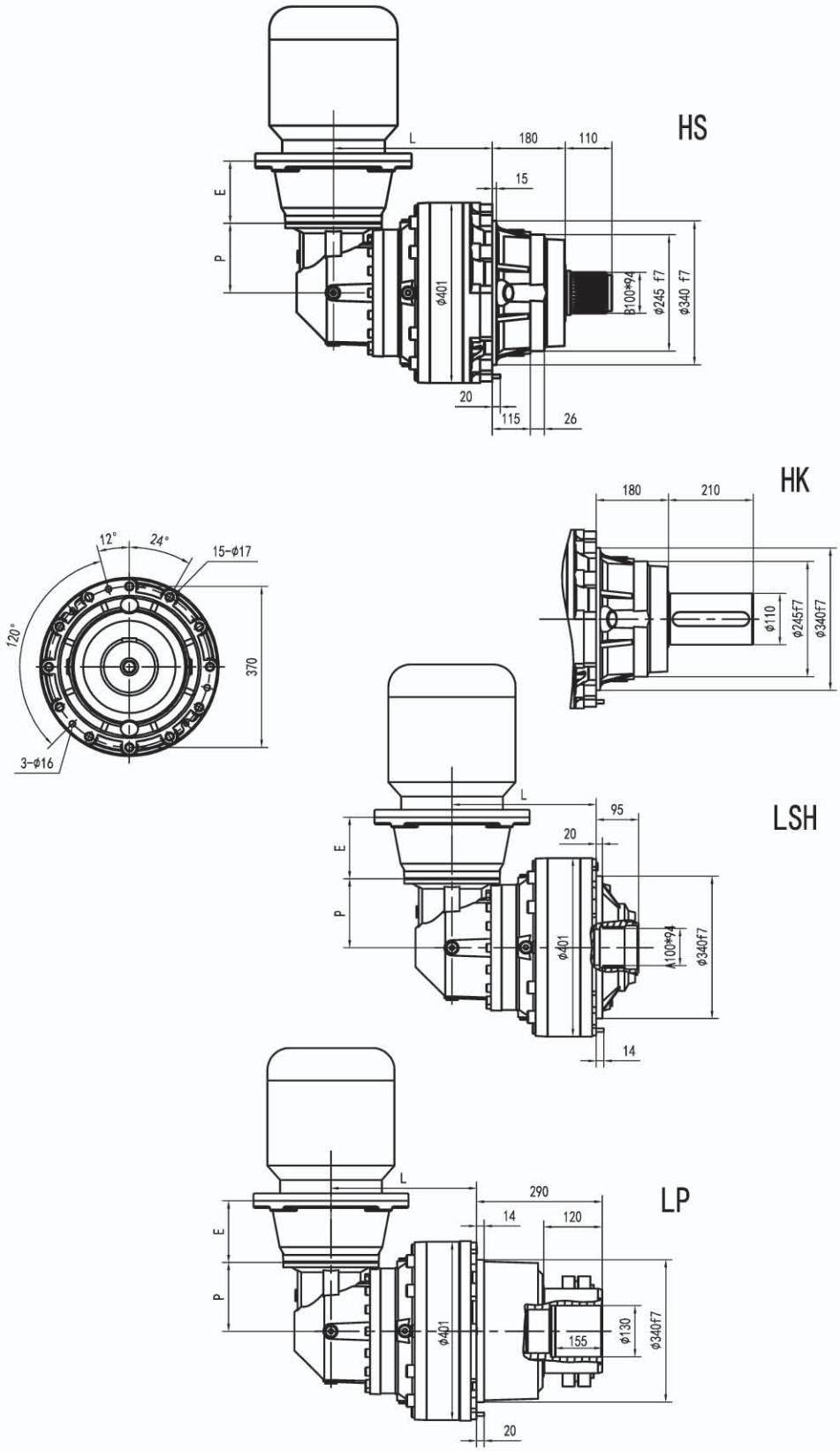
HS
L
180
110
15
E
P
Φ401
B100*94
Φ245 f7
Φ340 f7
20
115
26
HK
180
210
Φ110
Φ245F7
Φ340f7
12°
24°
15-Φ17
120°
370
3-Φ16
LSH
L
95
20
E
P
Φ401
B100*94
Φ340F7
14
LP
L
290
14
120
E
P
Φ401
155
Φ130
Φ340F7
20

GTN10 R

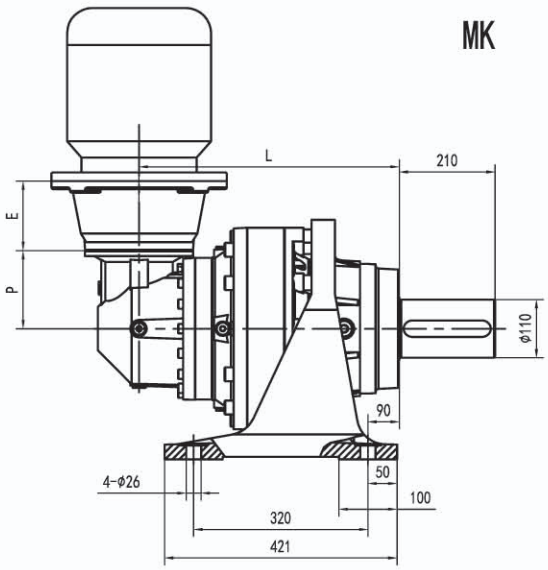

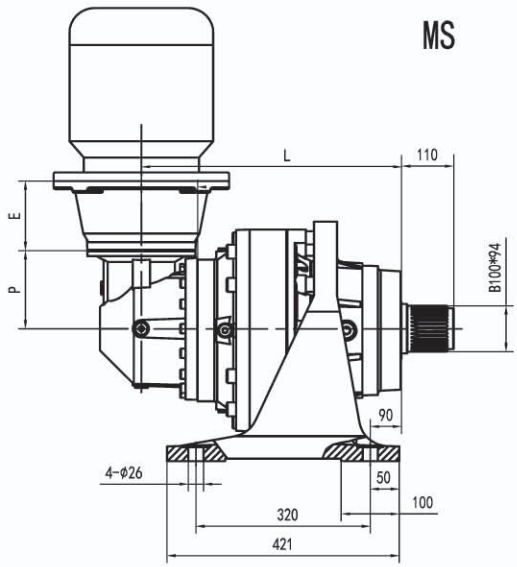

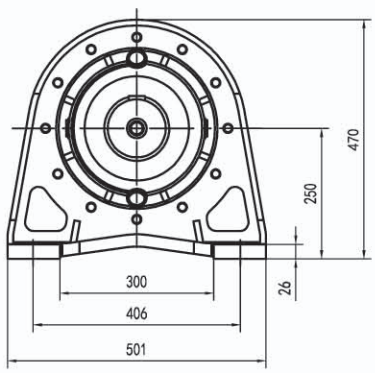

LP输出 LP VERSION	最大输出扭矩 MAX. TRANSMISSIBLE TORQUE	36000 Nm

	L				P	Kg				E									
	HS HK	MK MS	LSH	LP		HS HK	MK MS	LSH	LP	IEC 71	IEC 80	IEC 90	IEC 100	IEC 112	IEC 132	IEC 160	IEC 180	IEC 200	IEC 225
GTN10 R2(B)	305	485	285	285	345	260	280	240	250								152	182	212
GTN10 R2(C)	333	513	313	313	390	280	300	260	270								152	182	212
GTN10 R3	381	561	361	361	140	189	209	164	169	65	84	84	94	94	114	144			
GTN10 R4	401	581	381	381	140	194	214	169	174	65	84	84	94	94	114	144			

GTN10 R

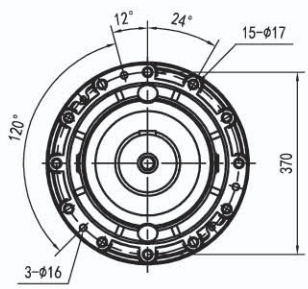
12°
24°
15-Φ17
120°
370
3-Φ16

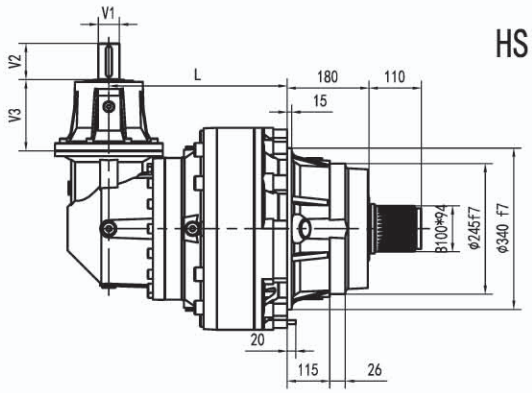
HS
V1
V2
V3
L
180
110
15
B100*94
Φ245f7
Φ340 f7
20
115
26

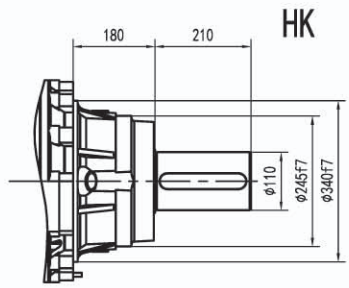
HK
180
210
Φ110
Φ245f7
Φ340f7

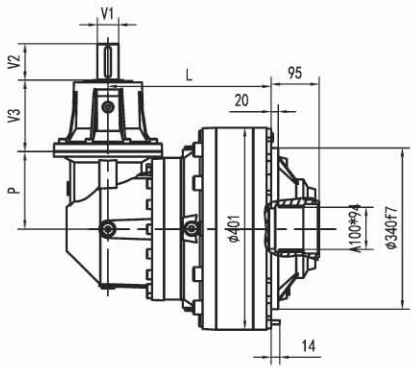
LSH
V1
V2
V3
P
L
95
20
Φ401
B100*94
Φ340f7
14

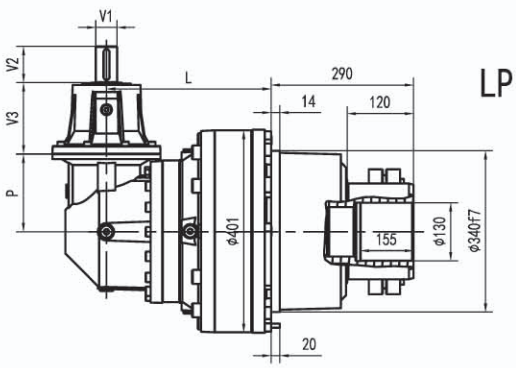
LP
V1
V2
V3
P
L
290
14
120
Φ401
155
Φ130
Φ340f7
20

GTN10 R

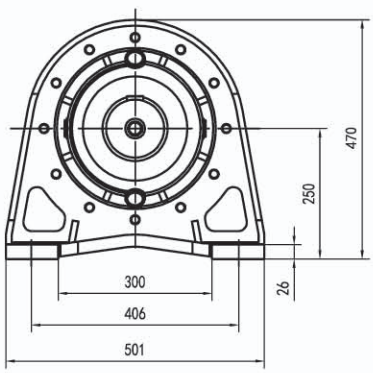

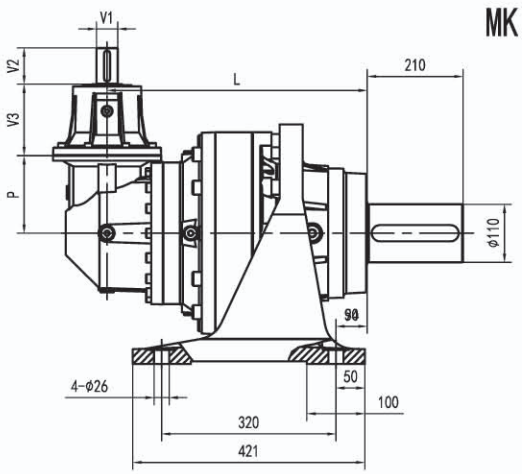

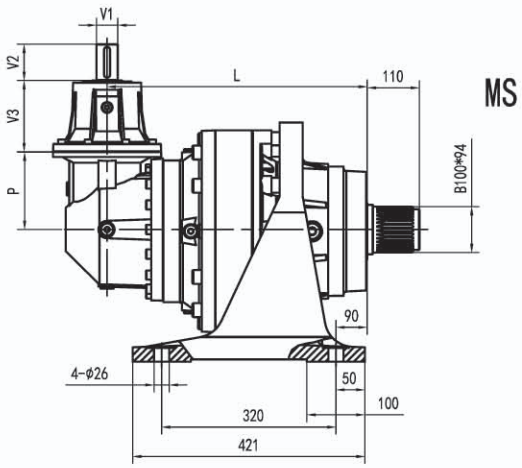

LP输出 LP VERSION	最大输出扭矩 MAX. TRANSMISSIBLE TORQUE	36000 Nm

	L				P	Kg				V1	V2	V3	Kg	V1	V2	V3	Kg
	HS HK	MK MS	LSH	LP		HS HK	MK MS	LSH	LP								
GTN10 R2(B)	305	485	285	285	345	260	280	240	250	60	105	307	23				
GTN10 R2(C)	333	513	313	313	390	280	300	260	270	60	105	307	23				
GTN10 R3	381	561	361	361	140	189	209	164	169	24	36	137.5	6	38	58	158	7
GTN10 R4	401	581	381	381	140	194	214	169	174	24	36	137.5	6	38	58	158	7

GTN10 L - GTN10 R

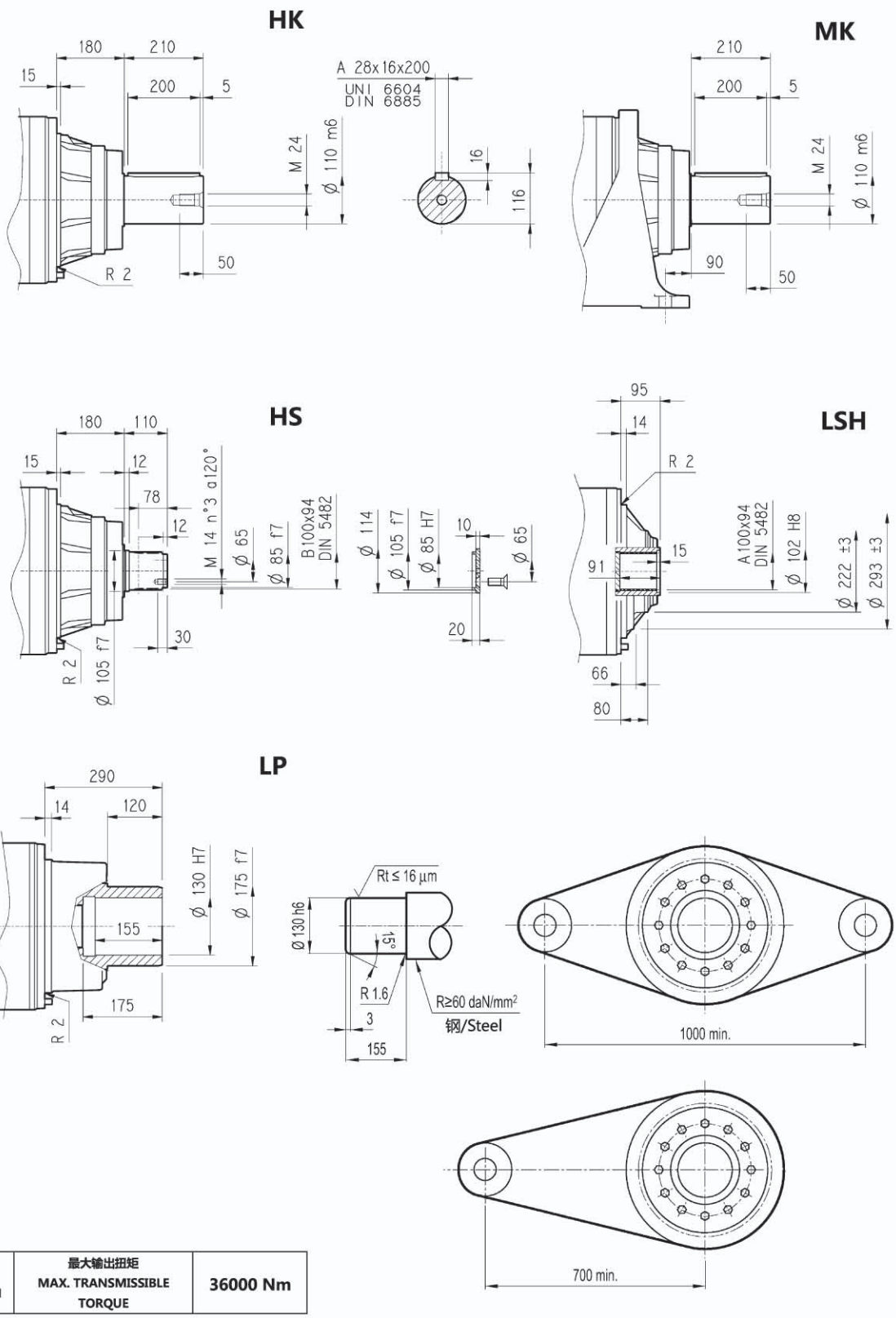

LP输出 LP VERSION	最大输出扭矩 MAX. TRANSMISSIBLE TORQUE	36000 Nm

GTN10 L - GTN10 R

法兰/ Flange



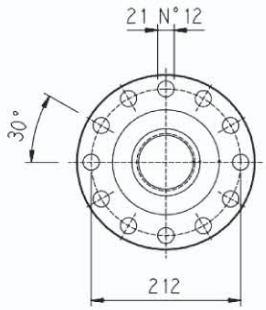

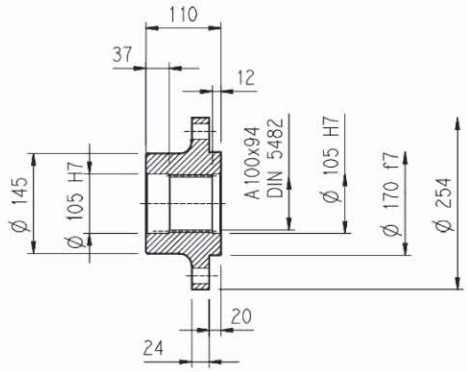

FOA

材料 : 钢 C40
Material : Steel C40

输出齿轮 / Output pinions



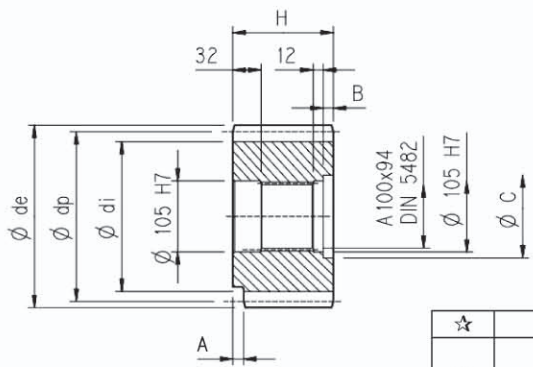

PM...

	m	z	x	dp	di	de	H	A	B	C	☆
PM1201	12	23	0	276	246	300	110	0	0	0	■
PM1601	16	13	0.500	208	184	252.5	145	0	35	116	□
PM1602	16	15	0.450	240	215	280	125	0	15	120	□

☆	材料 / Material
□	39NiCrMo3 调制钢 Steel 39NiCrMo3 hardened and tempered
■	18NiCrMo5 表面渗碳钢 18NiCrMo5 Case hardened

套筒联轴器 / Sleeve couplings



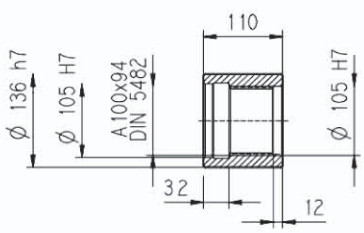

HOS

材料 :钢 16CrNi4
Material : Steel 16CrNi4

花键棒料 / Splined bars



SOF

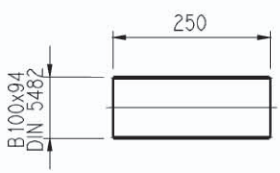

表面硬化钢18NiCrMo5 NUI5331,表面必须硬化50-55HRC
Case hardening steel 18NiCrMo5 UNI 5331 must be case hardened 50-55 HRC

锁紧盘 / Shrink disc



LOP

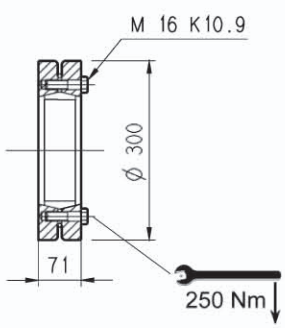

GTN10 L - GTN10 R

输入轴 / Input shaft

S_ _

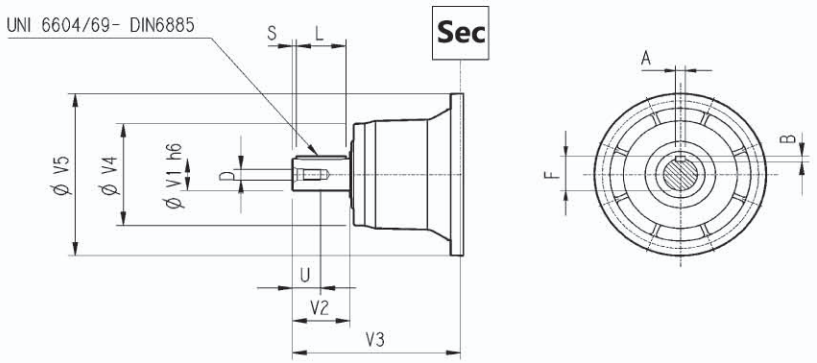

SV_ _

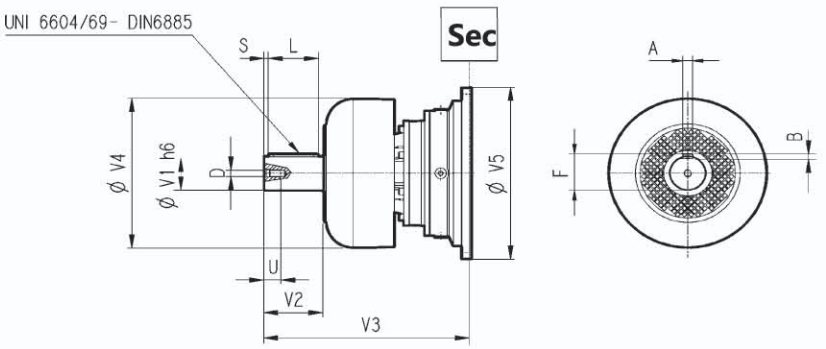

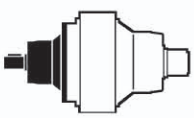

	CODE	V1	V2	V3	V4	V5	A	B	F	L	S	D	U
GTN10 L1	S10B	80	130	377	200	400	22	14	85	110	10	M16	36
	SV10B	80	130	457	347.5	400	22	14	85	110	10	M16	36
GTN10 L2	S06B	60	105	307	155	292	18	11	64	90	7.5	M16	36
	SV06B	60	105	357	309	292	18	11	64	90	7.5	M16	36
GTN10 L3	S05B	48	82	239	155	245	14	9	51.5	70	6	M16	36
	SV05B	48	82	276	219.5	244	14	9	51.5	70	6	M16	36
GTN10 L4	S01A	24	36	137.5	120	186	8	7	27	30	3	M8	19
	S01B	38	58	158	120	186	10	8	41	50	4	M12	28
GTN10 R2 (B) (C)	S06B	60	105	307	155	292	18	11	64	90	7.5	M16	36
	SV06B	60	105	357	309	292	18	11	64	90	7.5	M16	36
GTN10 R3-R4	S01A	24	36	137.5	120	186	8	7	27	30	3	M8	19
	S01B	38	58	158	120	186	10	8	41	50	4	M12	28

无电机适配器的输入尺寸

Input dimension without motor adaptor

S_ _

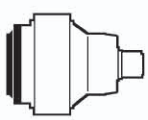

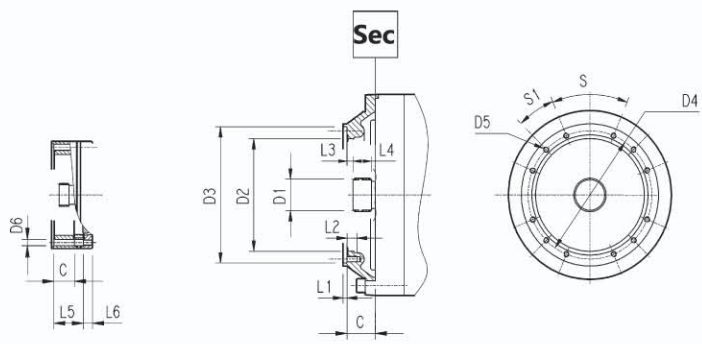

	CODE	C	D1	D2	D3	D4	D5	D6	L1	L2	L3	L4	L5	L6	S	S1	输入 Input
GTN10 L1	S9AC	88	70x64 DIN 5482	200	282 H7	266	M12 n°12	/	4	22	11	32	/	/	45°	45°	C
GTN10 L2	S9AB	45	58x53 DIN 5482	195	236 H7	222	M10 n°12	/	4	18	11	22	/	/	45°	22.5°	B
GTN10 L3	S9AA	37	40x36 DIN 5482	140	178 H7	165	M10 n°8	/	4	18	9	18	/	/	45°	45°	A
GTN10 L4	S9AA	37	40x36 DIN 5482	140	178 H7	165	M10 n°8	11	4	/	9	18	53	18	45°	45°	A
GTN10 R2 (B) (C)	S9AA	45	58x53 DIN 5482	195	236 H7	222	M10 n°12	/	4	18	11	22	/	/	45°	22.5°	B
GTN10 R3-R4	S9AA	37	40x36 DIN 5482	140	178 H7	165	M10 n°8	11	4	/	9	18	37	18	45°	45°	A

GTN10 L - GTN10 R

Fh_2输出轴允许的径向和轴向载荷
$n_2 \cdot h$ =10000

Permissible radial and axial loads on output shaft with $Fh_2 : n_2 \cdot h$ =10000

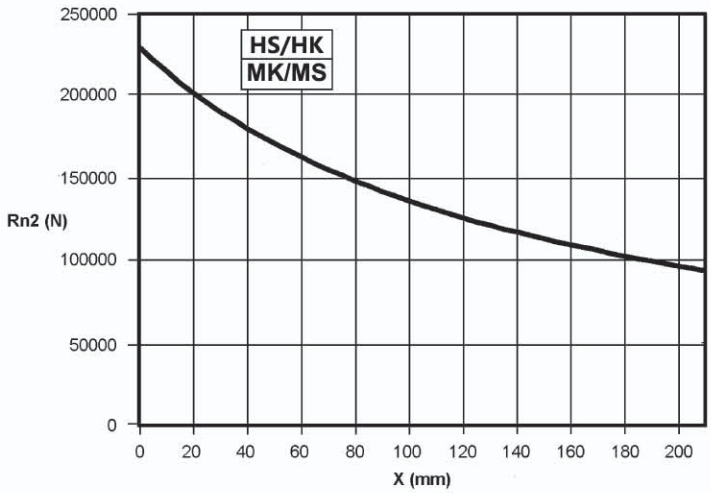

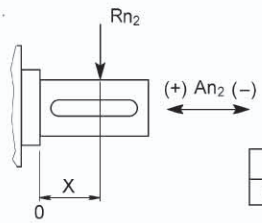

	An2 (+)	An2 (-)
HS-HK-MK-MS	170000	100000

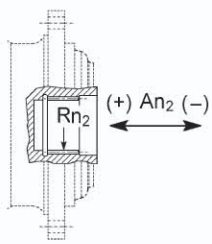

	Rn2	An2 (+/-)
LSH	65000	52000

轴上的载荷修正系数 fh_2 Load corrective factor fh_2 on shafts		$Fh_2 = n_2 \cdot h$	10000	25000	50000	100000	500000	1000000
	fh_2	LSH	1	0.74	0.58	0.46	0.27	0.21
		HS - HK - MK - MS	1	0.76	0.61	0.50	0.31	0.25

Fh_1输入轴允许的径向和轴向载荷
$n_2 \cdot h$ =250000

Permissible radial loads on inputshaft with $Fh_1 : n_1 \cdot h$ =250000

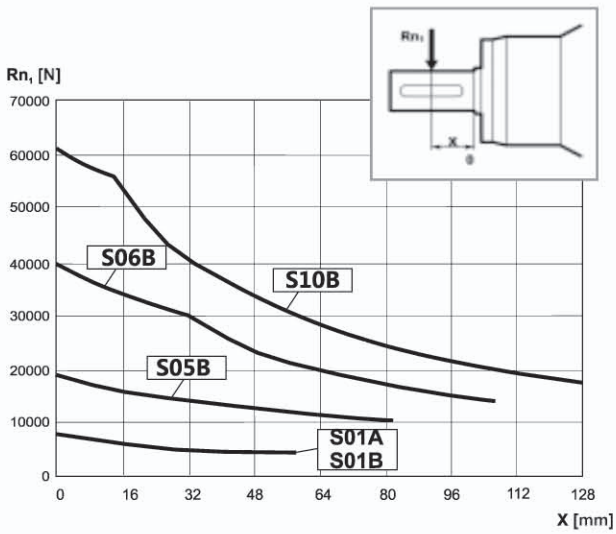

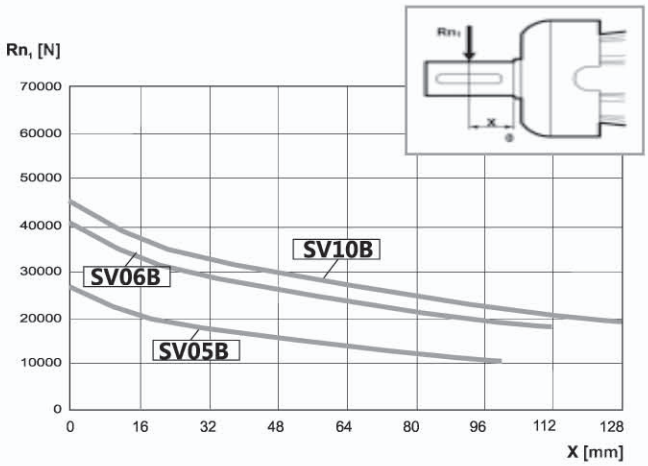

轴上的载荷修正系数fh_1 Load corrective factor fh_1 on shafts	$Fh_1 = n_1 \cdot h$	250000	500000	1000000	2000000	5000000	10000000
	fh_1	1	0.79	0.63	0.50	0.37	0.29

GTN11 L

HS

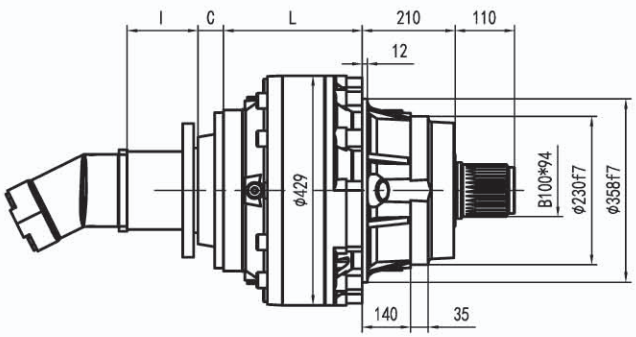

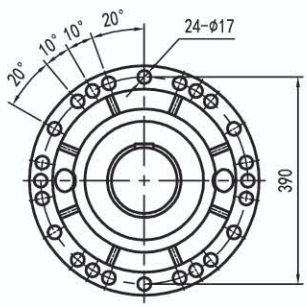

HK

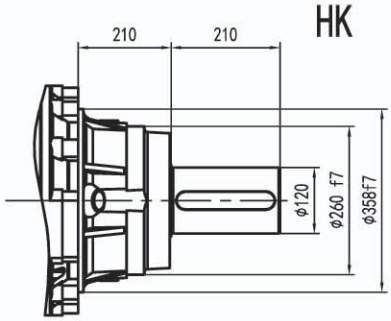

LSH

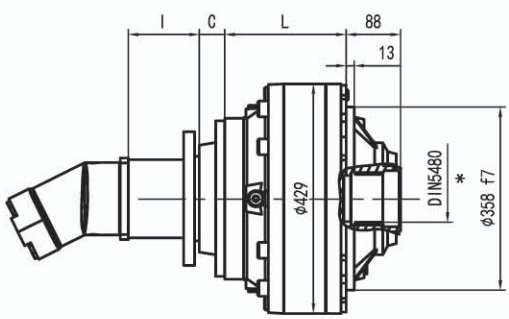

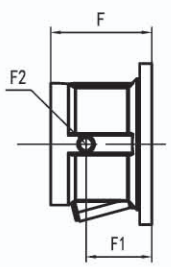

制动器
(选配)

LP

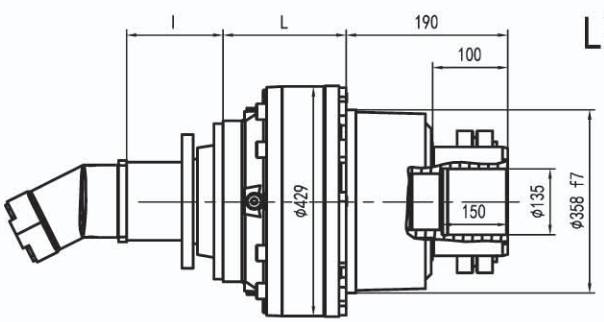

GTN11 L

MK

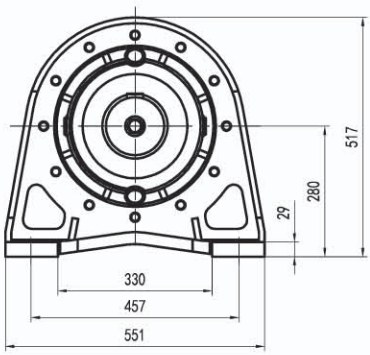

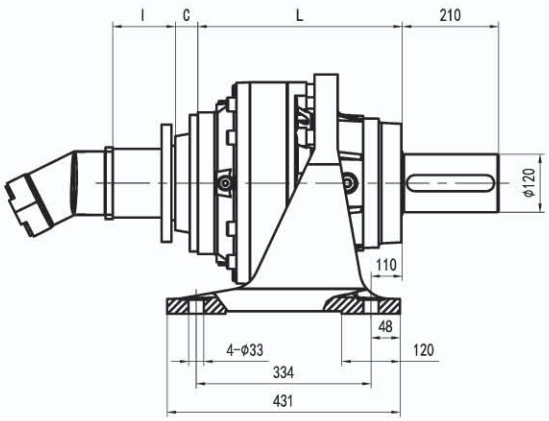

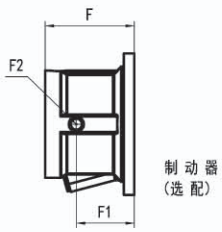

MS

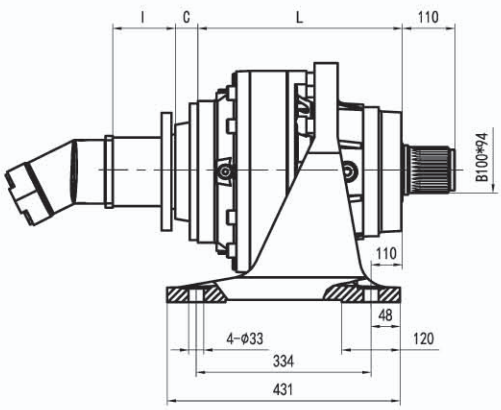

LP输出 LP VERSION	最大输出扭矩 MAX. TRANSMISSIBLE TORQUE	54000 Nm

	L				Kg												
	HS HK	MK MS	LSH	LP	HS HK	MK MS	LSH	LP	C	输入 Input	I	F	F1	F2	类型 Type	输入 Input	Kg
GTN11 L1	115	325	115	115	180	250	160	170	81	D	联系厂家						
GTN11 L2	248	458	248	248	225	295	205	215	51	B		201	153	1/4 G	6	B	28
GTN11 L3	337	547	337	337	237	307	217	227	37	A		145	95	1/4 G	5	A	16
GTN11 L4	402	612	402	402	244	314	224	234	37	A		105	65	1/4G	4	A	10

GTN11 L

HS

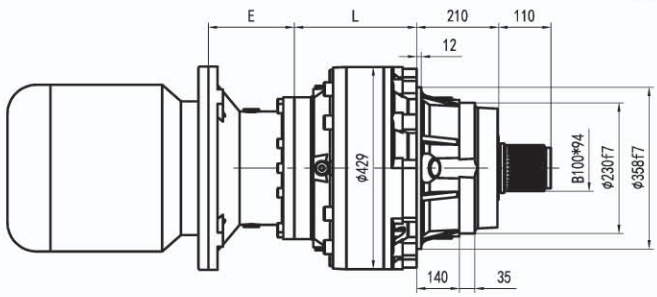

HK



LSH

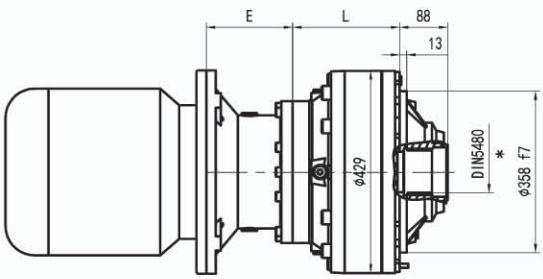

LP

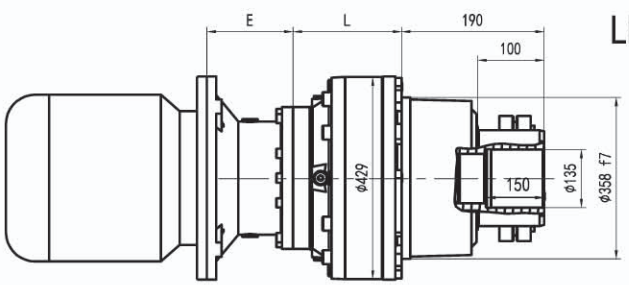

GTN11 L

MK

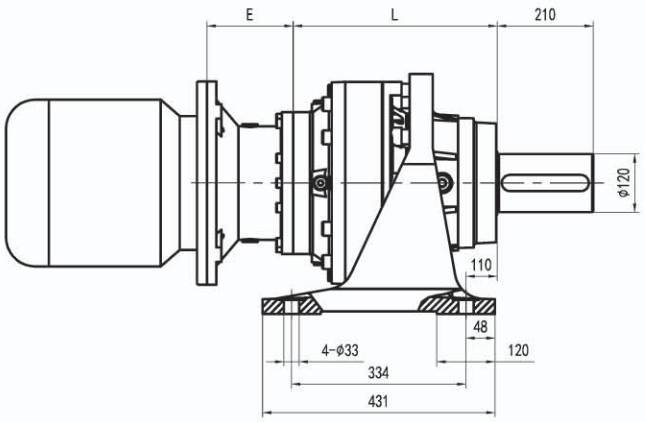

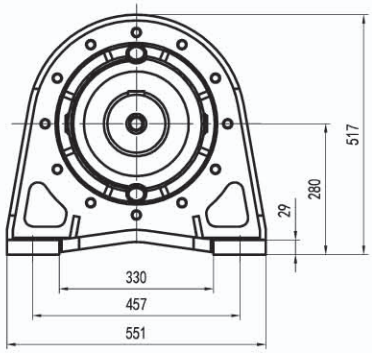

MS

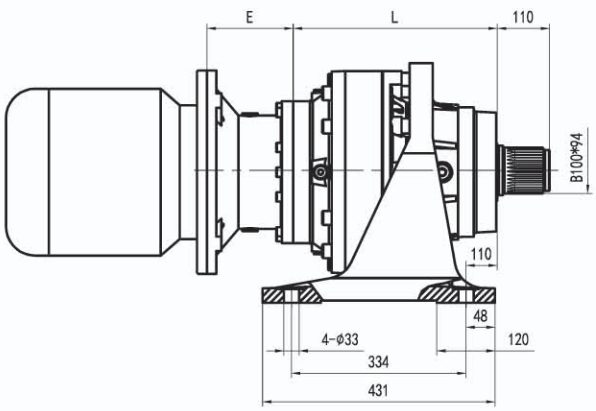

LP输出 LP VERSION	最大输出扭矩 MAX. TRANSMISSIBLE TORQUE	54000 Nm

	L				Kg				E										
	HS HK	MK MS	LSH	LP	HS HK	MK MS	LSH	LP	IEC 71	IEC 80	IEC 90	IEC 100	IEC 112	IEC 132	IEC 160	IEC 180	IEC 200	IEC 225	IEC 250
GTN11 L1	115	325	115	115	180	250	160	170											
GTN11 L2	248	458	248	248	225	295	205	215								195	186	216	215
GTN11 L3	337	547	337	337	237	307	217	227						114	144	144	174		
GTN11 L4	402	612	402	402	244	314	224	234	65	84	84	94	94	114	144				

GTN11 L

HS

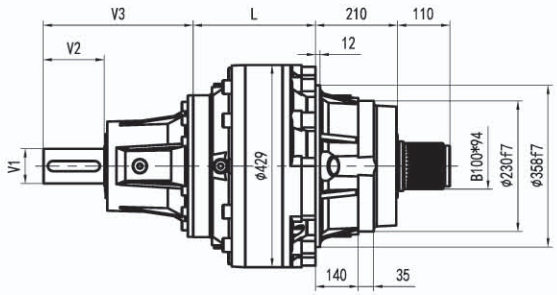

HK

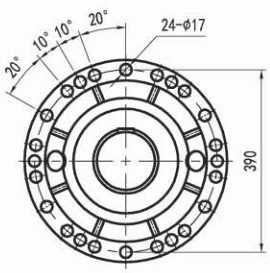

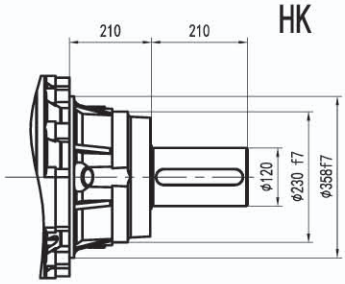

LSH

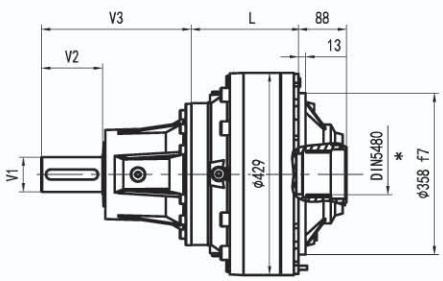

LP

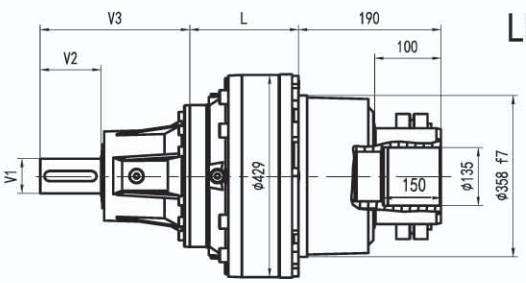

GTN11 L

MK

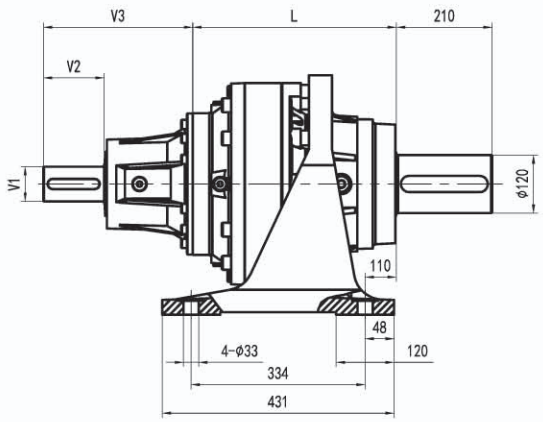

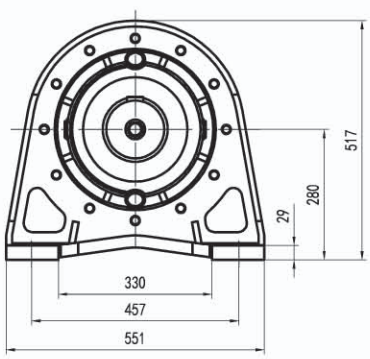

MS

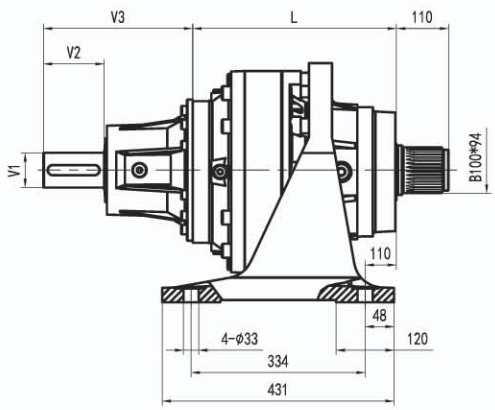

LP输出 LP VERSION	最大输出扭矩 MAX. TRANSMISSIBLE TORQUE	54000 Nm

	L				Kg											
	HS HK	MK MS	LSH	LP	HS HK	MK MS	LSH	LP	V1	V2	V3	Kg	V1	V2	V3	Kg
GTN11 L1	115	325	115	115	180	250	160	170	80	130	348	55				
GTN11 L2	248	458	248	248	225	295	205	215	80	130	315	35	60	105	313	28
GTN11 L3	337	547	337	337	237	307	217	227	48	82	239	15				
GTN11 L4	402	612	402	402	244	314	224	234	24	36	137.5	6	38	58	158	7

GTN11 R

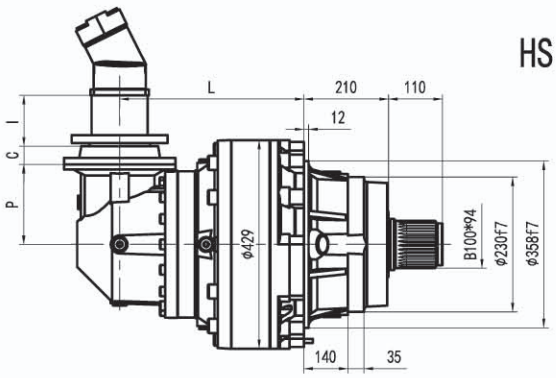
HS
L
210
110
12
I
C
P
ø429
B100*94
ø230f7
ø358f7
140
35

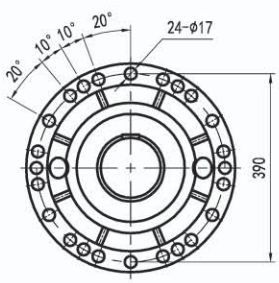
20°
10°
10°
20°
24-ø17
390

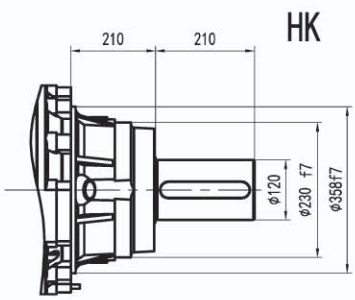
HK
210
210
ø120
ø230 f7
ø358f7

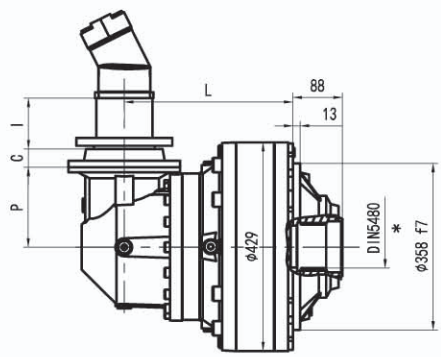
LSH
L
88
13
I
C
P
ø429
DIN5480
*
ø358 f7

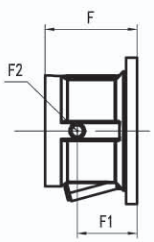
F
F2
F1
制 动 器
(选 配)

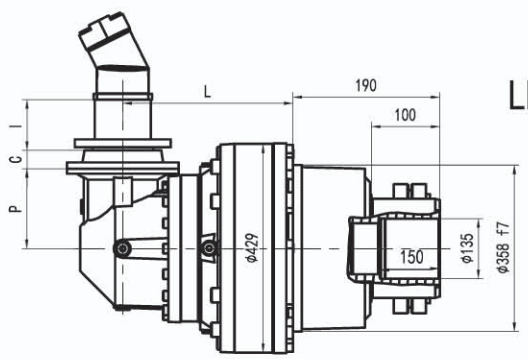
LP
L
190
100
I
C
P
ø429
150
ø135
ø358 f7

GTN11 R

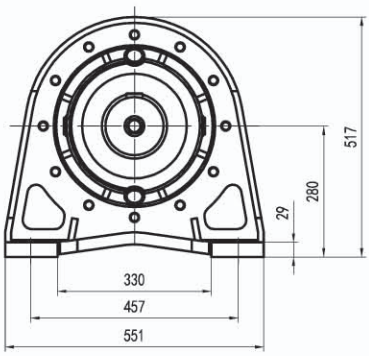

MK

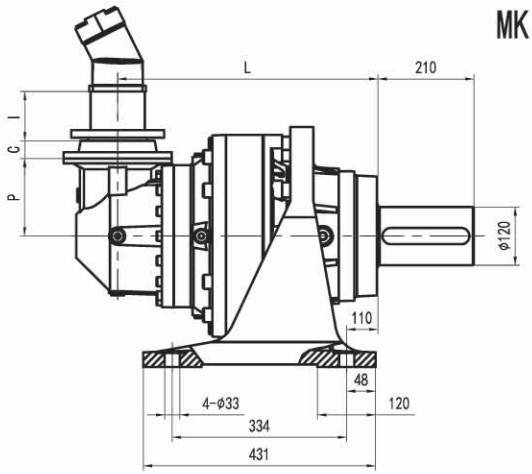

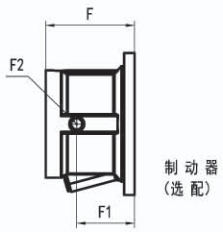

MS

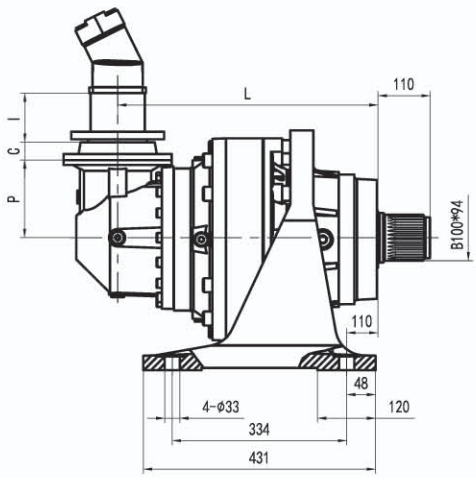

LP输出 LP VERSION	最大输出扭矩 MAX. TRANSMISSIBLE TORQUE	54000 Nm

	L				P	Kg				C	输入 Input	I				类型 Type	输入 Input	Kg
	HS HK	MK MS	LSH	LP		HS HK	MK MS	LSH	LP				F	F1	F2			
GTN11 R2 (B)	340	550	340	340	345	310	380	290	300	45	B	联系厂家	195	147	1/4 G	6	B	28
GTN11 R2 (C)	340	550	340	340	390	320	390	300	310	45	B		195	147	1/4 G	6	B	28
GTN11 R3	367	577	367	367	225	275	345	255	265	37	A		145	95	1/4 G	5	A	16
GTN11 R4	429	639	429	429	140	257	327	237	247	37	A		105	65	1/4 G	4	A	10

GTN11 R

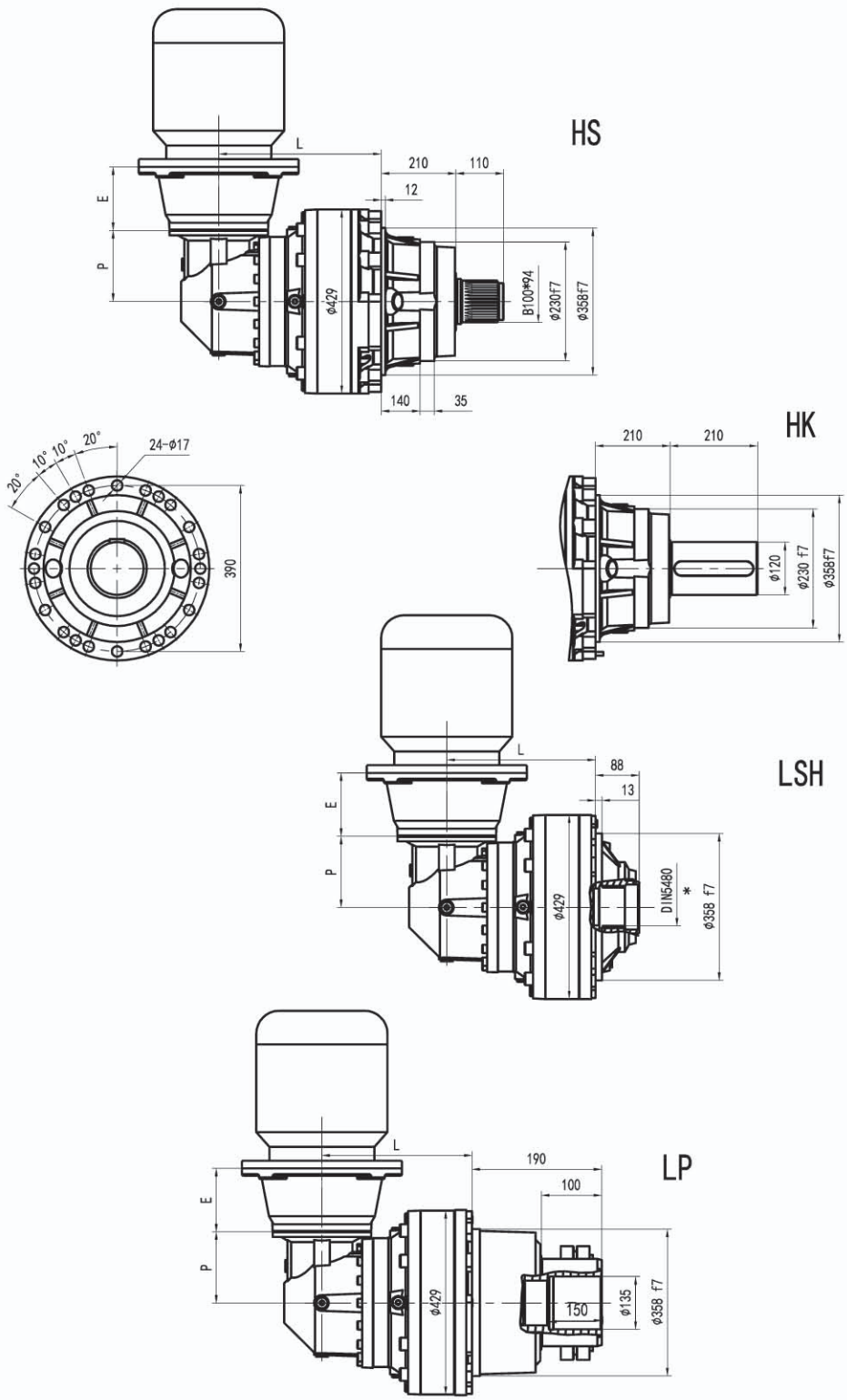
HS
L
210
110
12
E
P
ϕ429
B100*94
ϕ230f7
ϕ358f7
140
35
HK
210
210
ϕ120
ϕ230 f7
ϕ358f7
20°
10°
10°
20°
24-ϕ17
390
LSH
L
88
13
E
P
ϕ429
DIN5480
*
ϕ358 f7
LP
L
190
100
E
P
ϕ429
150
ϕ135
ϕ358 f7

GTN11 R

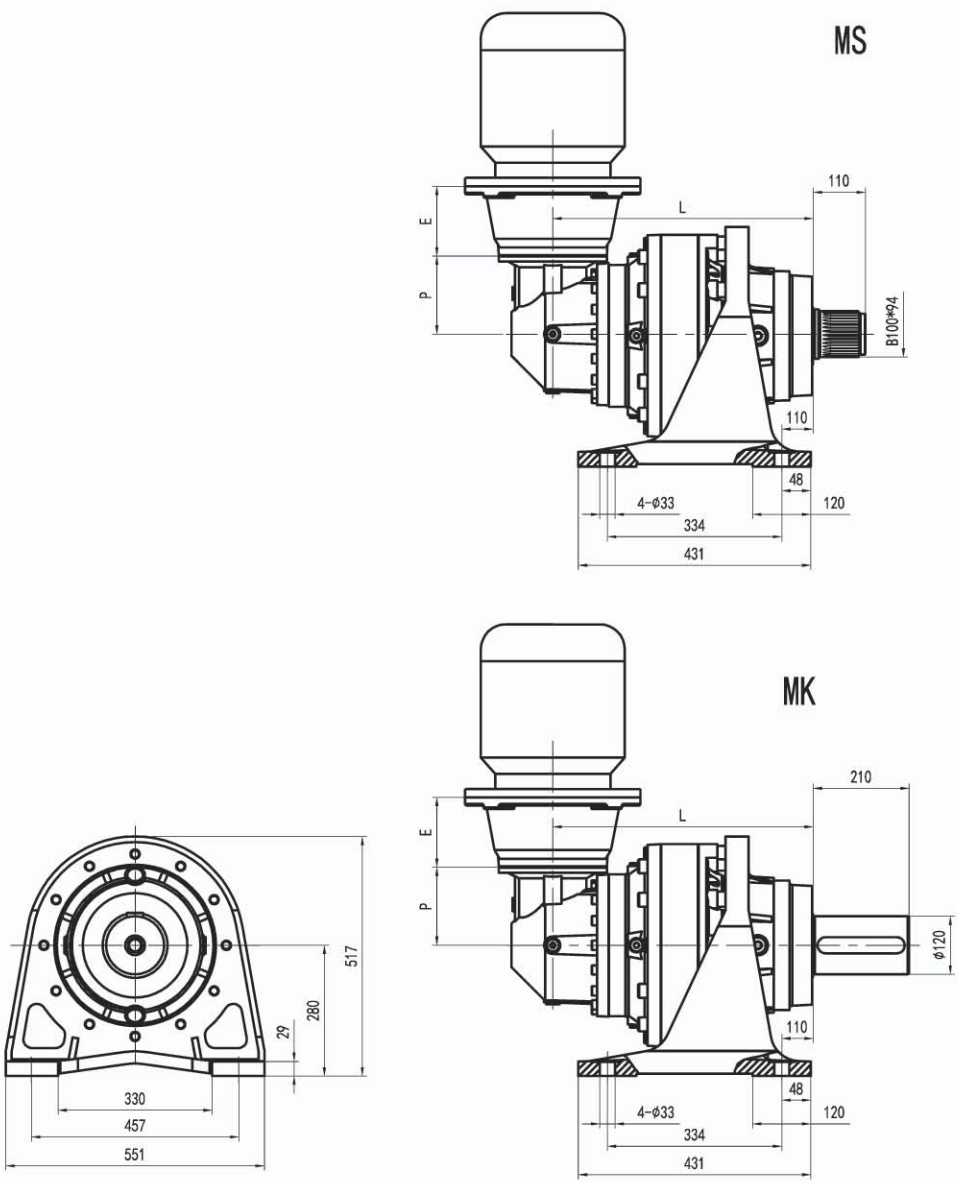

LP输出 LP VERSION	最大输出扭矩 MAX. TRANSMISSIBLE TORQUE	54000 Nm

	L				P	Kg				E											
	HS HK	MK MS	LSH	LP		HS HK	MK MS	LSH	LP	IEC 71	IEC 80	IEC 90	IEC 100	IEC 112	IEC 132	IEC 160	IEC 180	IEC 200	IEC 225	IEC 250
GTN11 R2 (B)	340	550	340	340	345	310	380	290	300								152	182	212	193
GTN11 R2 (C)	340	550	340	340	390	320	390	300	310								152	182	212	193
GTN11 R3	367	577	367	367	225	275	345	255	265						114	144	144	174		
GTN11 R4	429	639	429	429	140	257	327	237	247	65	84	84	94	94	114	144				

GTN11 R

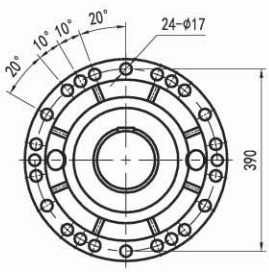
20°
10°
10°
20°
24-φ17
390

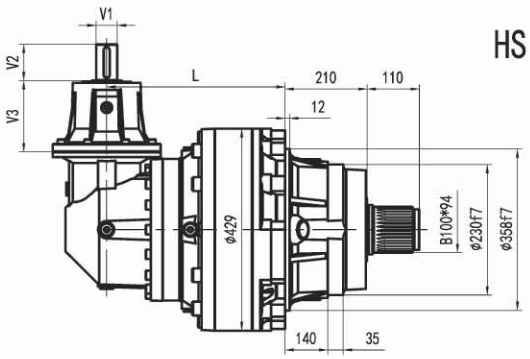
HS
V1
V2
V3
L
210
110
12
φ429
B100*94
φ230f7
φ358f7
140
35

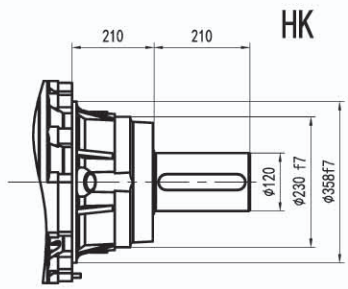
HK
210
210
φ120
φ230 f7
φ358f7

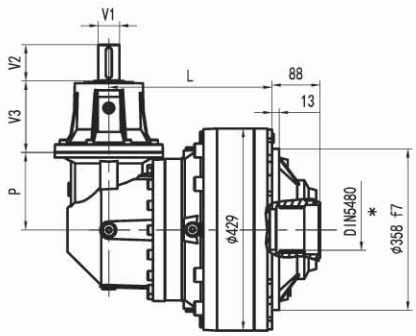
LSH
V1
V2
V3
P
L
88
13
φ429
DIN5480
*
φ358 f7

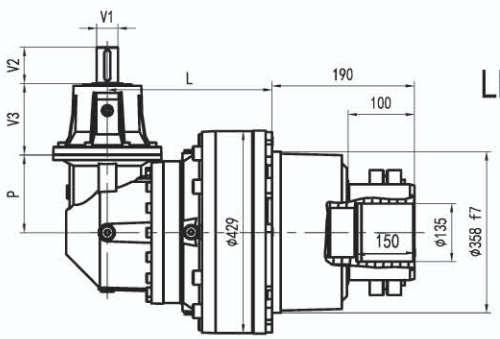
LP
V1
V2
V3
P
L
190
100
φ429
150
φ135
φ358 f7

GTN11 R

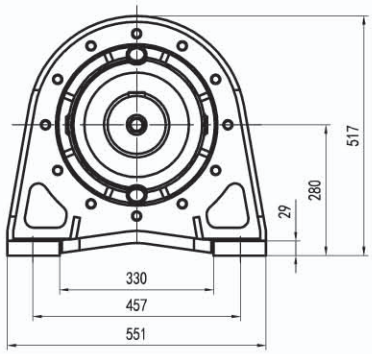

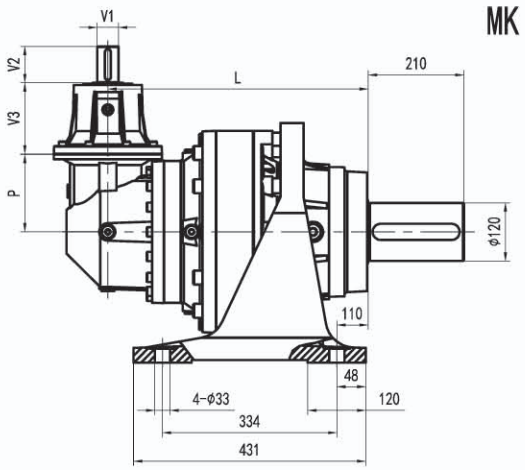

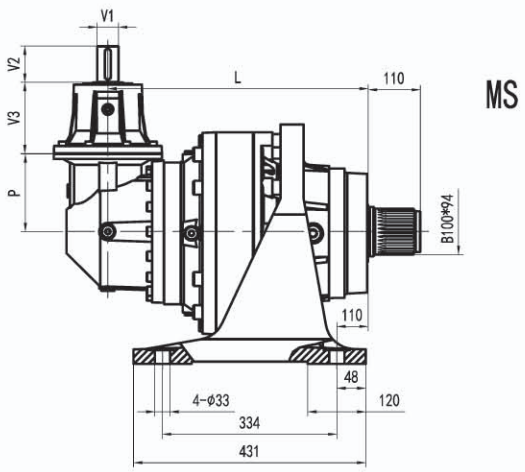

LP输出 LP VERSION	最大输出扭矩 MAX. TRANSMISSIBLE TORQUE	54000 Nm

	L				P	Kg											
	HS HK	MK MS	LSH	LP		HS HK	MK MS	LSH	LP	V1	V2	V3	Kg	V1	V2	V3	Kg
GTN11 R2 (B)	340	550	340	340	345	310	380	290	300	60	105	307	23				
GTN11 R2 (C)	340	550	340	340	390	320	390	300	310	60	105	307	23				
GTN11 R3	367	577	367	367	225	275	345	255	265	48	82	239	15				
GTN11 R4	429	639	429	429	140	257	327	237	247	24	36	137.5	6	38	58	158	7

GTN 11 L - GTN11 R

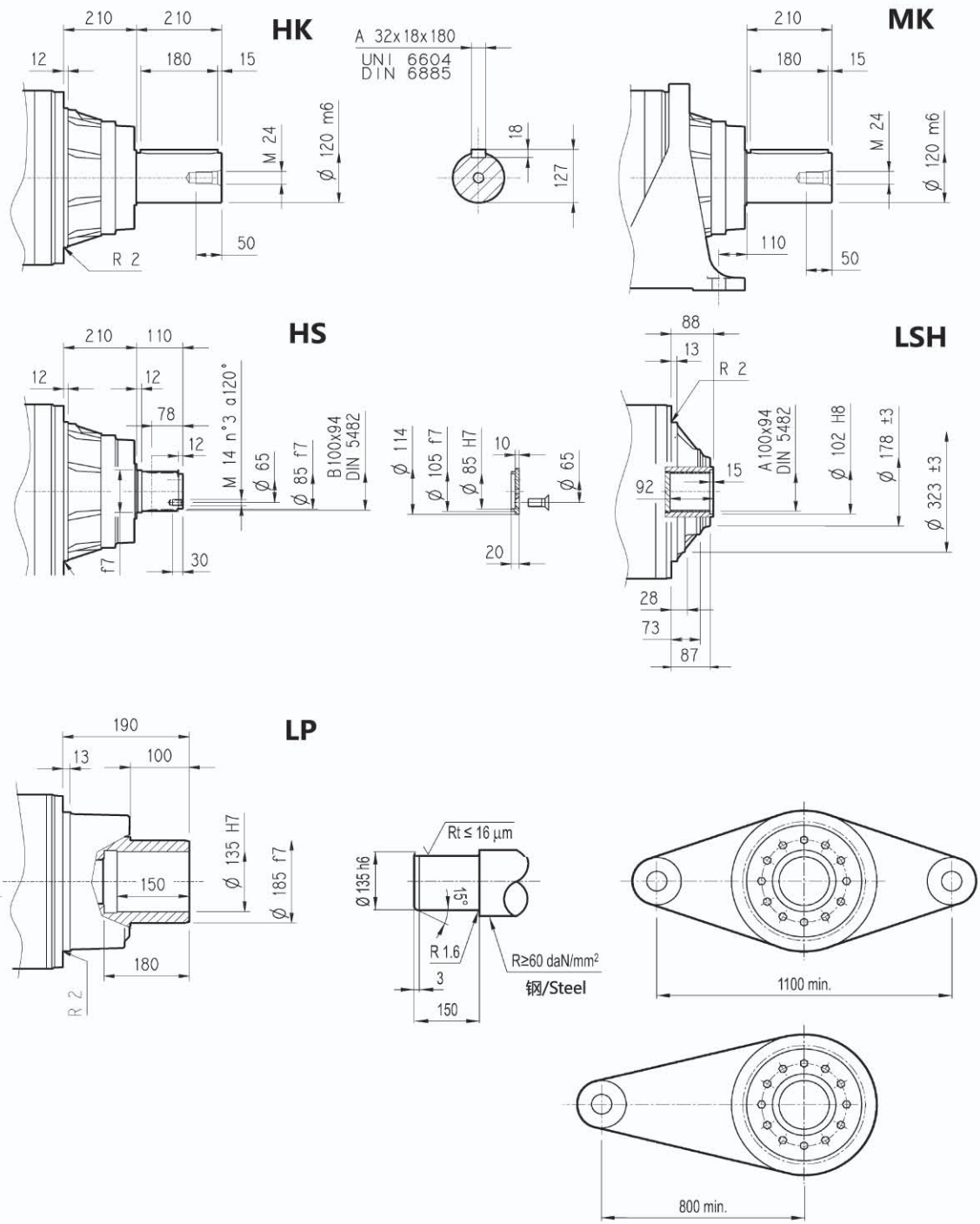

LP输出 LP VERSION	最大输出扭矩 MAX. TRANSMISSIBLE TORQUE	54000 Nm

GTN11 L - GTN11 R

法兰 / Flange

FOA



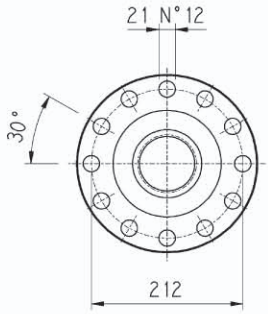

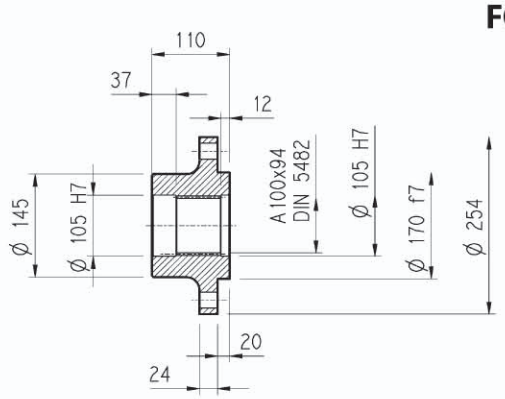

材料：钢 C40
Material : Steel C40

输出齿轮 / Output pinions

PM...



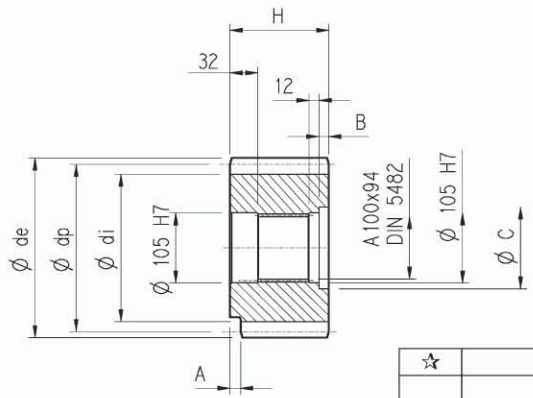

	m	z	x	dp	di	de	H	A	B	C	☆
PM1201	12	23	0	276	246	300	110	0	0	0	■
PM1601	16	13	0.500	208	184	252.5	145	0	35	116	□
PM1602	16	15	0.450	240	215	280	125	0	15	120	□

☆	材料 / Material
□	39NiCrMo3 调制钢 Steel 39NiCrMo3 hardened and tempered
■	18NiCrMo5 表面渗碳钢 18NiCrMo5 Case hardened

套筒联轴器 / Sleeve couplings

HOS



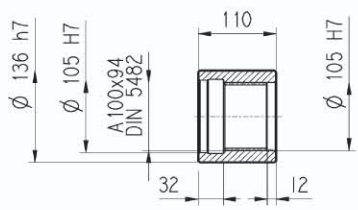

材料: 16CrNi4
Material : Steel 16CrNi4

花键 / Splined bars

SOF



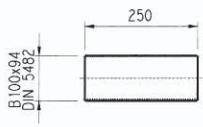

LSH

表面硬化钢 18NiCrMo5 UNI 5331 表面硬化必须达到 50-55 HRC
Case hardening steel 18NiCrMo5 UNI 5331
must be case hardened 50-55 HRC

锁紧盘 / Shrink disc

LOP



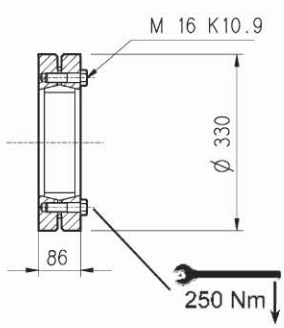

GTN11 L - GTN11 R

输入轴 / Input shaft

S_ _

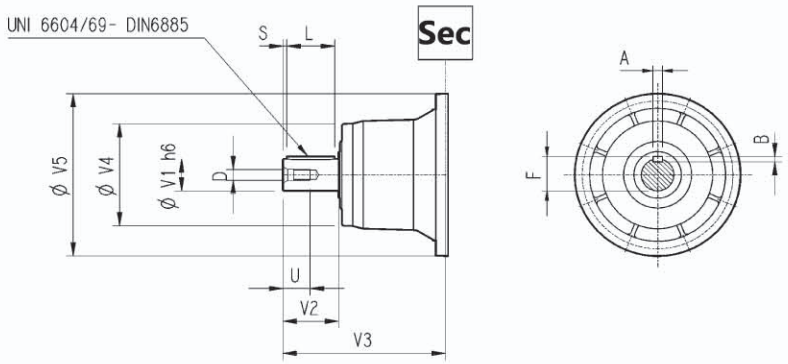

SV_ _

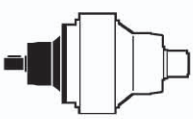

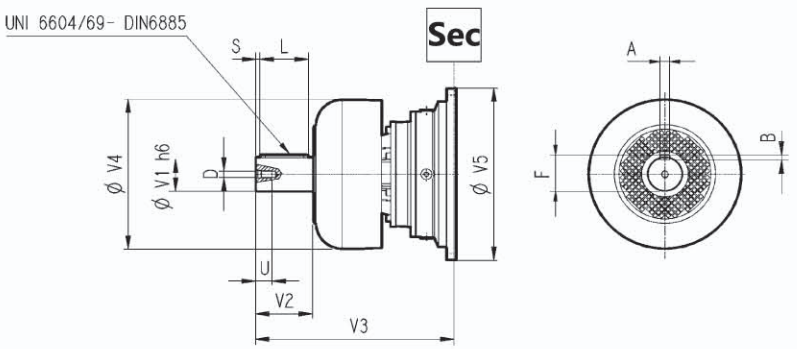

	CODE	V1	V2	V3	V4	V5	A	B	F	L	S	D	U
GTN11 L1	S11B	80	130	348	200	428	22	14	85	110	10	M16	36
	SV11B	80	130	456	347.5	428	22	14	85	110	10	M16	36
GTN11 L2	S07B	80	130	315	200	345	22	14	85	110	10	M16	36
	SV07B	80	130	375	347.5	348	22	14	85	110	10	M16	36
	S07A	60	105	313	155	345	18	11	64	90	7.5	M16	36
	SV07A	60	105	363	309	348	18	11	64	90	7.5	M16	36
GTN11 L3	S05B	48	82	239	155	245	14	9	51.5	70	6	M16	36
	SV05B	48	82	276	219.5	244	14	9	51.5	70	6	M16	36
GTN11 L4	S01A	24	36	137.5	120	186	8	7	27	30	3	M8	19
	S01B	38	58	158	120	186	10	8	41	50	4	M12	28
GTN11 R3	S05B	48	82	239	155	245	14	9	51.5	70	6	M16	36
	SV05B	48	82	276	219.5	244	14	9	51.5	70	6	M16	36
GTN11 R2 (B) (C)	S06B	60	105	307	155	292	18	11	64	90	7.5	M16	36
	SV06B	60	105	357	309	292	18	11	64	90	7.5	M16	36
GTN11 R4	S01A	24	36	137.5	120	186	8	7	27	30	3	M8	19
	S01B	38	58	158	120	186	10	8	41	50	4	M12	28

不带电机的输入法兰尺寸
Input dimension without motor adaptor

S_ _

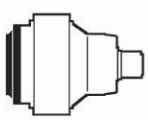

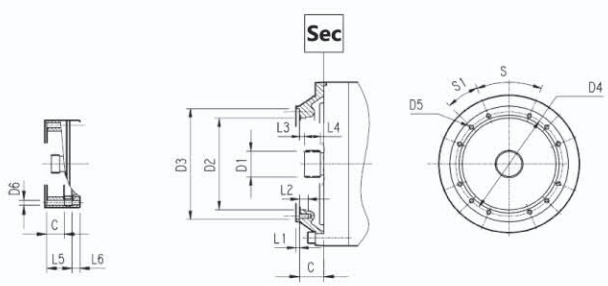

	CODE	C	D1	D2	D3	D4	D5	D6	L1	L2	L3	L4	L5	L6	S	S1	输入 Input
GTN11 L1	S9AD	81	80x74 DIN 5482	270	335 H7	314	M16 n°8	/	5	30	8.5	40	/	/	60°	30°	D
GTN11 L2	S9AB	51	58x53 DIN 5482	195	236 H7	222	M10 n°12	/	4	18	11	22	/	/	45°	22.5°	B
GTN11 L3	S9AA	37	40x36 DIN 5482	140	178 H7	165	M10 n°8	/	4	18	9	18	/	/	45°	45°	A
GTN11 L4	S9AA	37	40x36 DIN 5482	140	178 H7	165	M10 n°8	11	4	/	9	18	65	18	45°	45°	A
GTN11 R3	S9AA	37	40x36 DIN 5482	140	178 H7	165	M10 n°8	11	4	18	9	18	/	/	45°	45°	A
GTN11 R2 (B) (C)	S9AB	45	58x53 DIN 5482	195	236 H7	222	M10 n°12	/	4	18	11	22	/	/	45°	22.5°	B
GTN11 R4	S9AA	37	40x36 DIN 5482	140	178 H7	165	M10 n°8	11	4	/	9	18	37	18	45°	45°	A

GTN11 L - GTN11 R

输出轴允许的径向和轴向载荷
$Fh_2 : n_2 . h = 10000$

Permissible radial and axial loadson output shaft with Fh_2 $n_2 \cdot h = 10000$

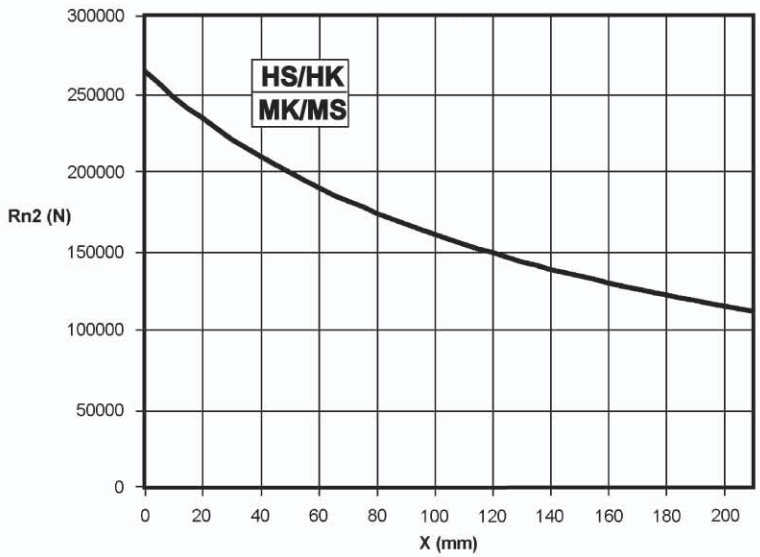

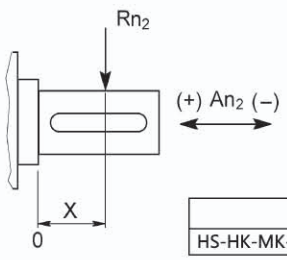

	An2 (+)	An2 (-)
HS-HK-MK-MS	200000	140000

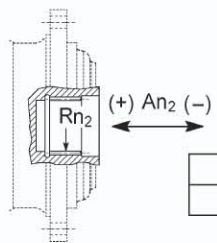

	Rn2	An2 (+/-)
LSH	65000	60000

轴上的载荷修正系数 fh_2 Load corrective factor fh_2 on shafts	$Fh_2 = n_2 \cdot h$		10000	25000	50000	100000	500000	1000000
	fh_2	LSH	1	0.74	0.58	0.46	0.27	0.21
		HS-HK-MK-MS	1	0.76	0.61	0.50	0.31	0.25

输入轴允许的径向和轴向载荷
$Fh_1 : n_1 . h = 250000$

Permissible radial loads on input shaft with $Fh_1 : n_1 \cdot h = 250000$

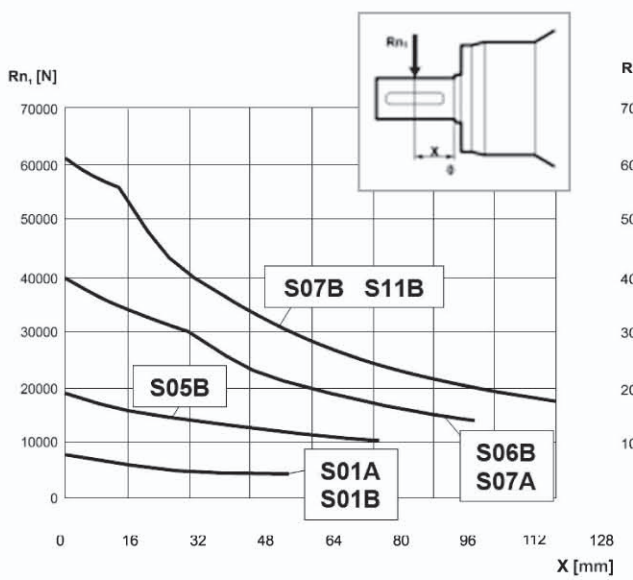

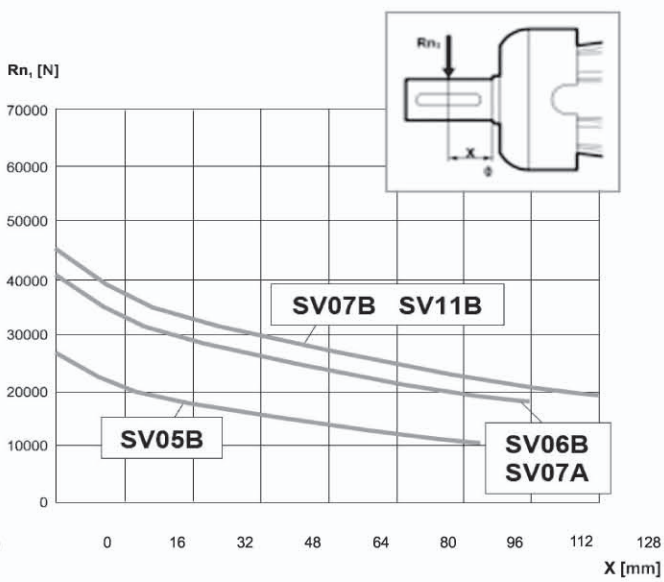

轴上的载荷修正系数fh_1 Load corrective factor fh_1 on shafts	$Fh_1 = n_1 \cdot h$	250000	500000	1000000	2000000	5000000	10000000
	fh_1	1	0.79	0.63	0.50	0.37	0.29

GTN13 L

HS

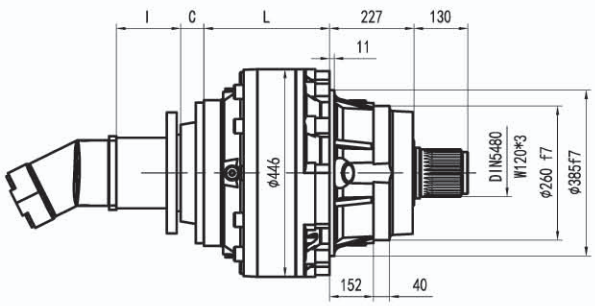

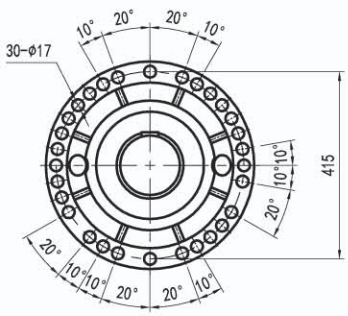

HK

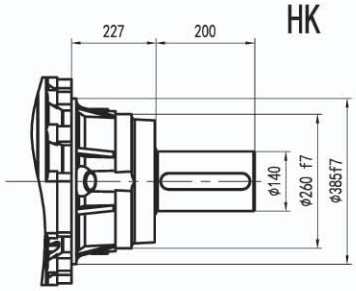

LSH

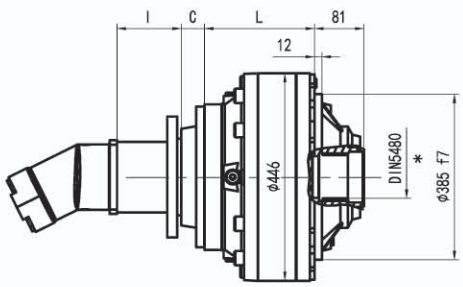

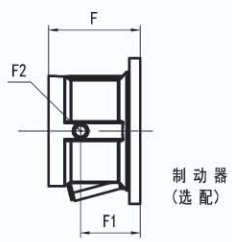

制动器
(选配)

LP

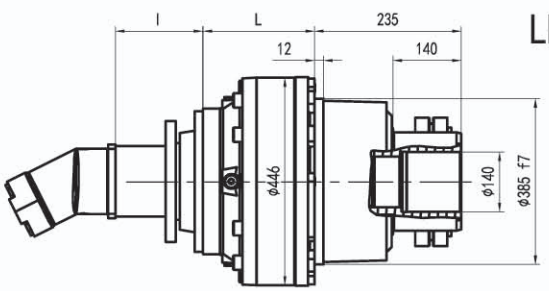

GTN13 L

MK

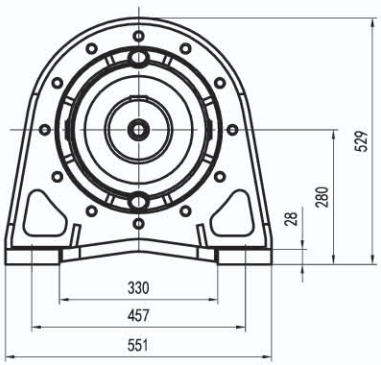

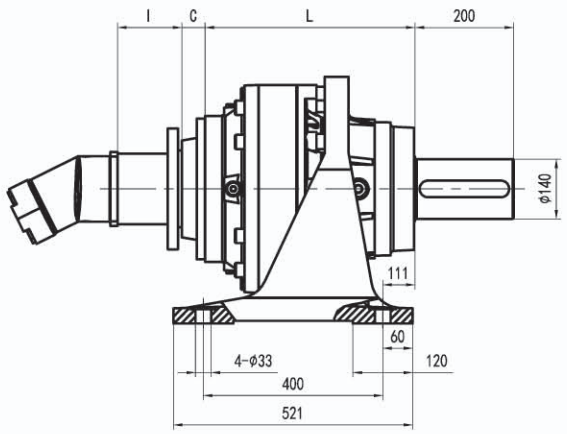

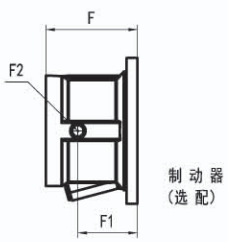

MS

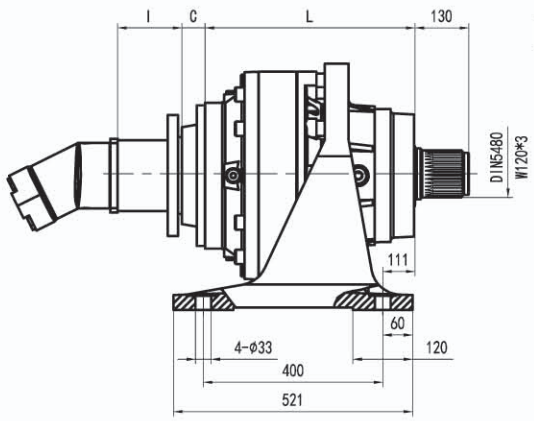

LP输出 LP VERSION	最大输出扭矩 MAX. TRANSMISSIBLE TORQUE	66000 Nm

	L				Kg												
	HS HK	MK MS	LSH	LP	HS HK	MK MS	LSH	LP	C	输入 Input	I	F	F1	F2	类型 Type	输入 Input	Kg
GTN13 L1	154	381	154	154	230	320	200	200	76	D	联系厂家						
GTN13 L2	304	531	304	304	290	380	260	280	51	B		201	153	1/4 G	6	B	28
GTN13 L3	393	620	393	393	302	392	272	292	37	A		145	95	1/4 G	5	A	16
GTN13 L4	458	685	458	458	309	399	279	299	37	A		105	65	1/4G	4	A	10

GTN13 L

HS

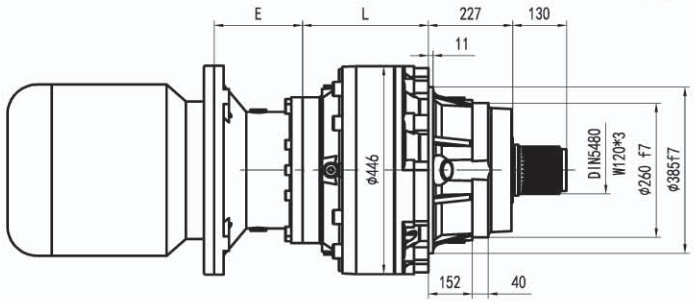

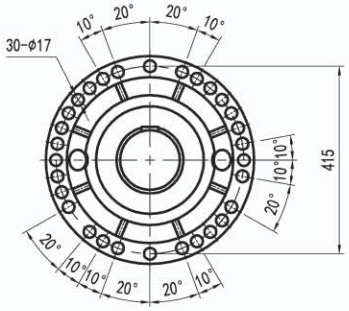

HK

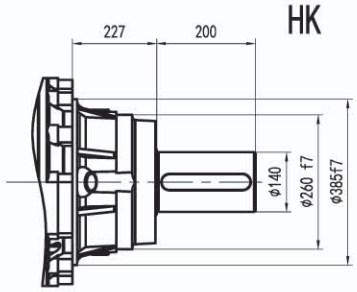

LSH

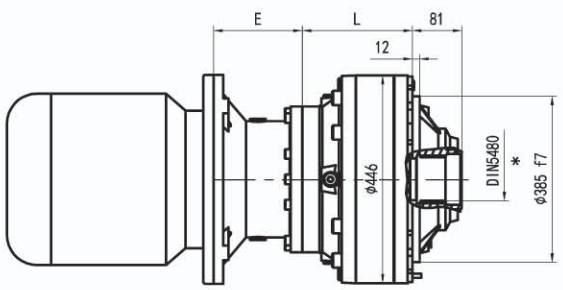

LP

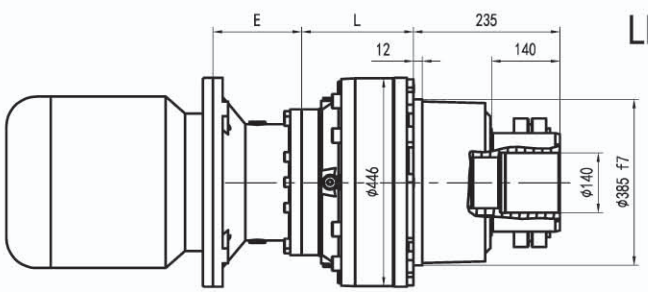

GTN13 L

MK

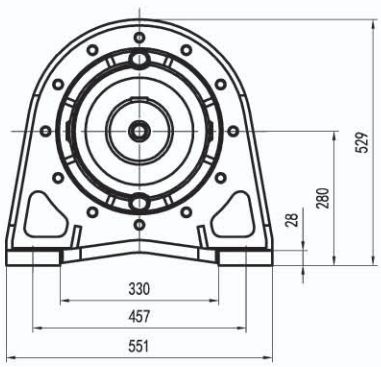

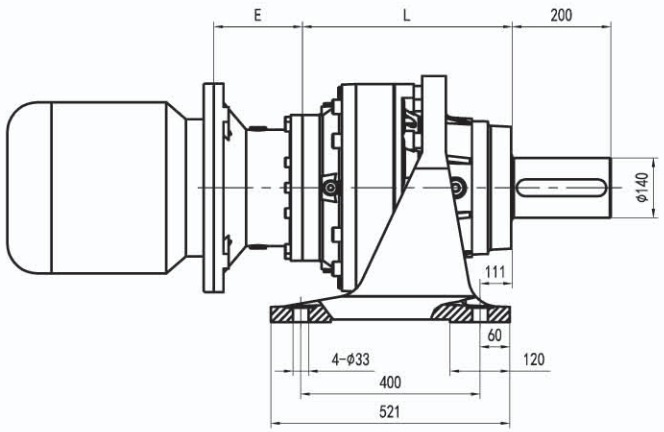

MS

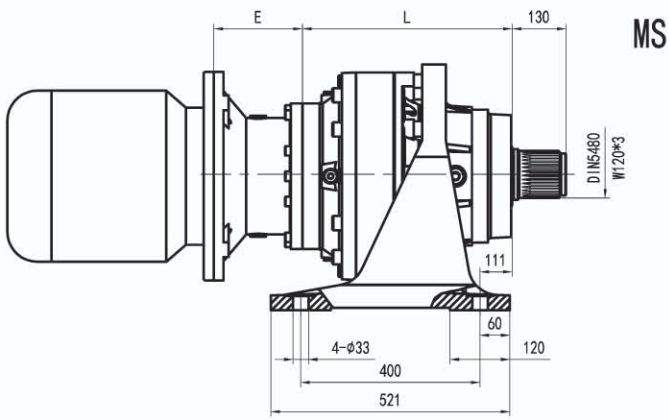

LP输出 LP VERSION	最大输出扭矩 MAX. TRANSMISSIBLE TORQUE	66000 Nm

	L				Kg				E										
	HS HK	MK MS	LSH	LP	HS HK	MK MS	LSH	LP	IEC 71	IEC 80	IEC 90	IEC 100	IEC 112	IEC 132	IEC 160	IEC 180	IEC 200	IEC 225	IEC 250
GTN13 L1	154	381	154	154	230	320	200	200											
GTN13 L2	304	531	304	304	290	380	260	280								195	186	216	215
GTN13 L3	393	620	393	393	302	392	272	292						114	144	144	174		
GTN13 L4	458	685	458	458	309	399	279	299	65	84	84	94	94	114	144				

GTN13 L

HS

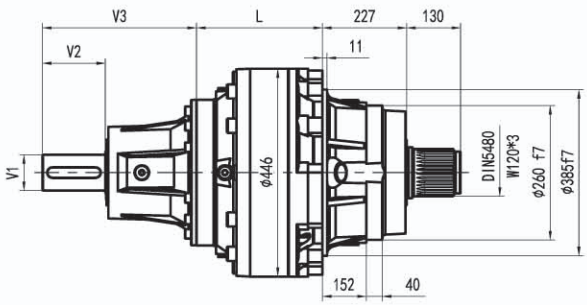

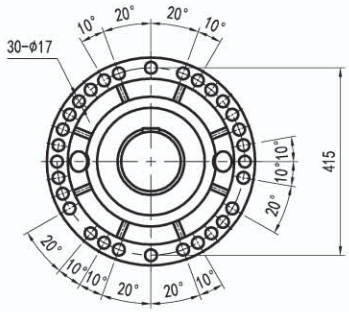

HK

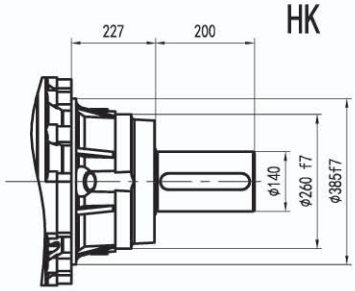

LSH

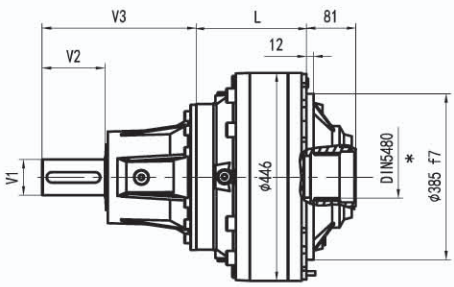

LP

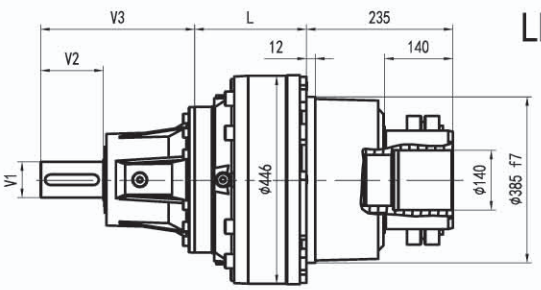

GTN13 L

MK

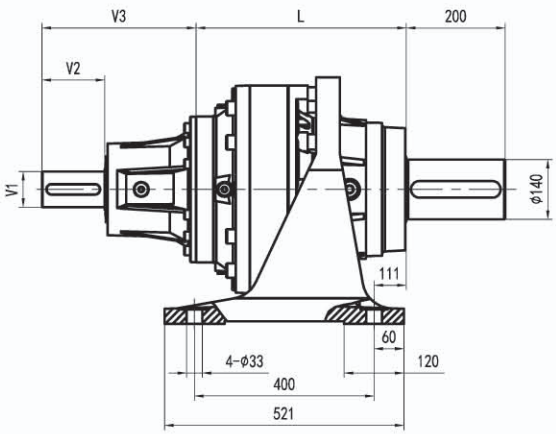

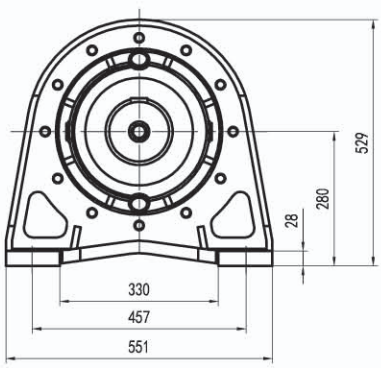

MS

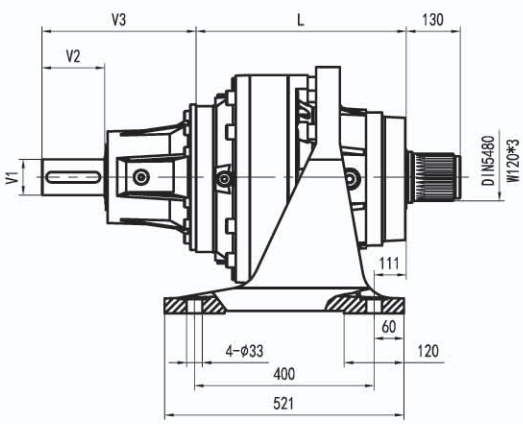

LP输出 LP VERSION	最大输出扭矩 MAX. TRANSMISSIBLE TORQUE	66000 Nm

	L				Kg											
	HS HK	MK MS	LSH	LP	HS HK	MK MS	LSH	LP	V1	V2	V3	Kg	V1	V2	V3	Kg
GTN13 L1	154	381	154	154	230	320	200	200	80	130	343	55				
GTN13 L2	304	531	304	304	290	380	260	280	80	130	315	35	60	105	313	28
GTN13 L3	393	620	393	393	302	392	272	292	48	82	239	15				
GTN13 L4	458	685	458	458	309	399	279	299	24	36	137.5	6	38	58	158	7

GTN13 R

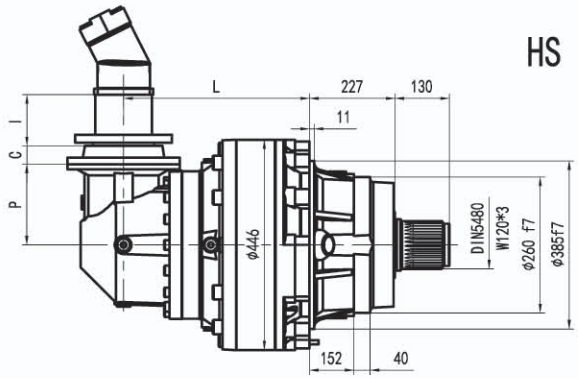
HS
L
227
130
11
I
C
P
φ446
DIN5480
W120*3
φ260 f7
φ385f7
152
40

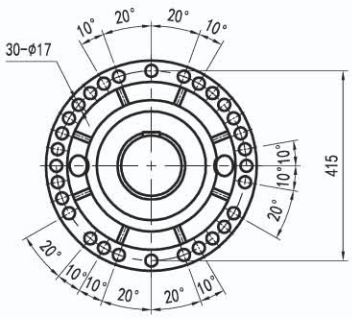
30-φ17
10°
20°
20°
10°
415
20°
10°
10°
20°
10°
10°
20°
20°
10°

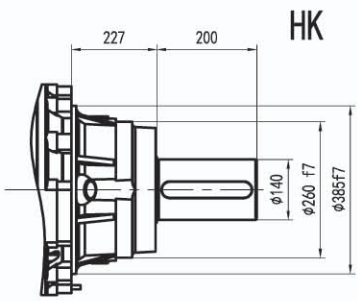
HK
227
200
φ140
φ260 f7
φ385f7

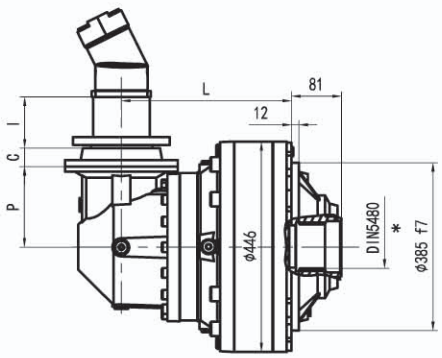
LSH
L
81
12
I
C
P
φ446
DIN5480
*
φ385 f7

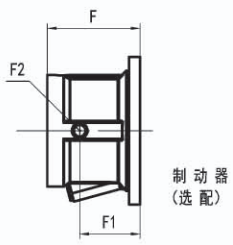
F
F2
F1
制动器
(选配)

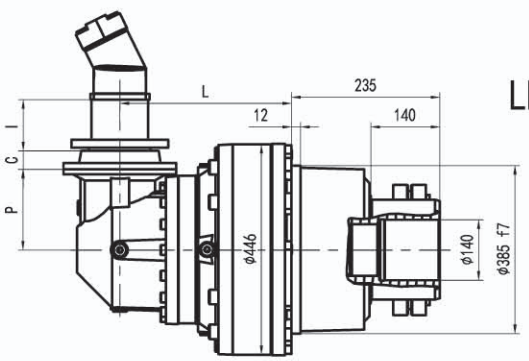
LP
L
235
12
140
I
C
P
φ446
φ140
φ385 f7

GTN13 R

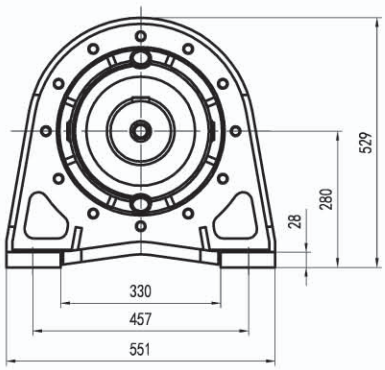

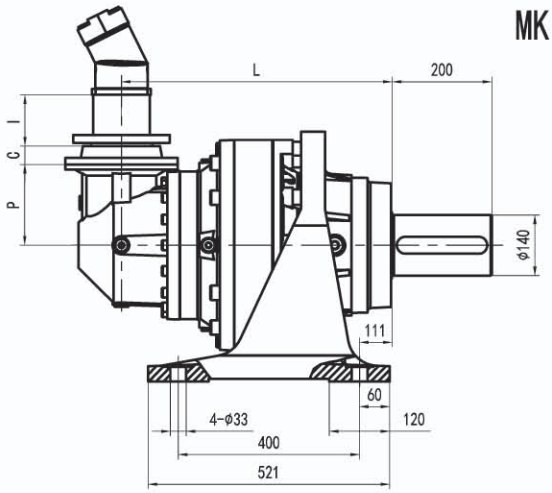

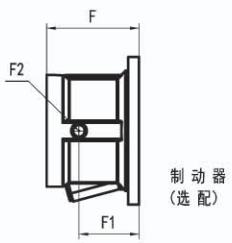

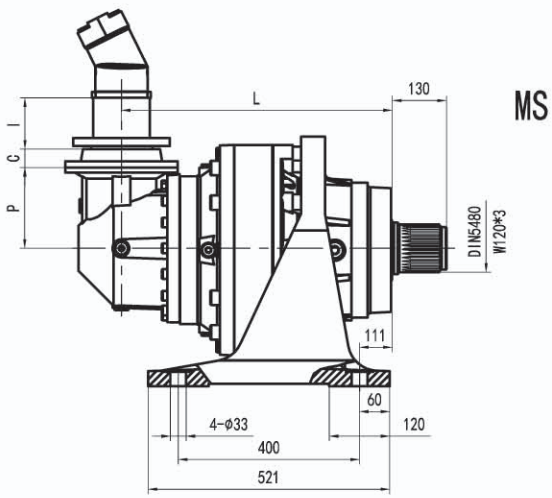

LP输出 LP VERSION	最大输出扭矩 MAX. TRANSMISSIBLE TORQUE	66000 Nm

	L				P	Kg						I						Kg
	HS HK	MK MS	LSH	LP		HS HK	MK MS	LSH	LP	C	输入 Input		F	F1	F2	类型 Type	输入 Input	
GTN13 R2 (B)	384	611	384	384	345	360	450	330	350	45	B		195	147	1/4 G	6	B	28
GTN13 R2 (C)	384	611	384	384	390	370	460	340	360	45	B	联系	195	147	1/4 G	6	B	28
GTN13 R3	423	650	423	423	225	340	430	310	330	37	A	厂家	145	95	1/4 G	5	A	16
GTN13 R4	485	712	485	485	140	322	412	292	312	37	A		105	95	1/4 G	4	A	10

GTN13 R

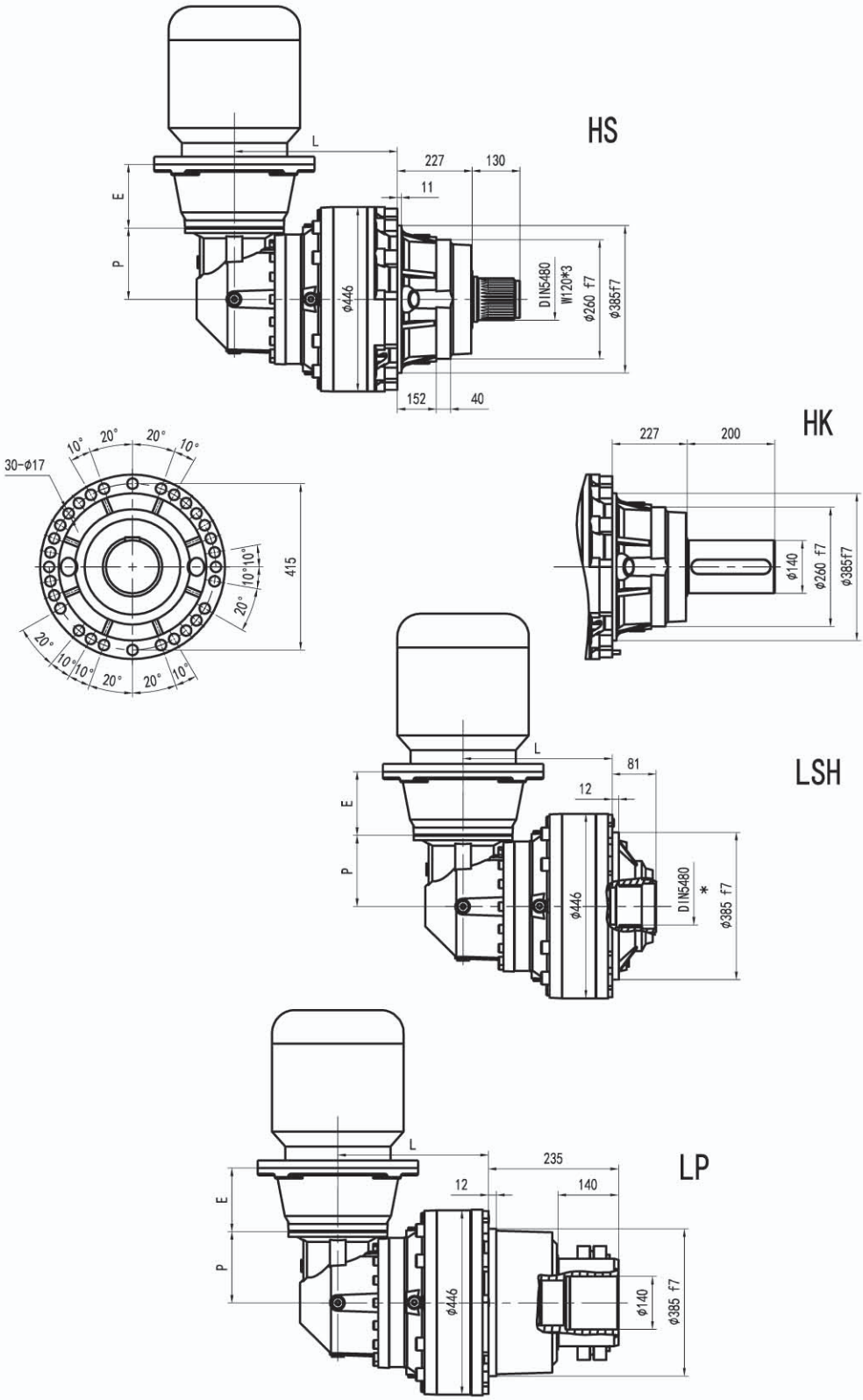
HS
L
227
130
11
E
P
DIN5480
W120*3
Φ260 f7
Φ385f7
Φ446
152
40
HK
227
200
Φ140
Φ260 f7
Φ385f7
30-Φ17
10°
20°
20°
10°
415
LSH
L
81
12
E
P
DIN5480
*
Φ385 f7
Φ446
LP
L
235
12
140
E
P
Φ446
Φ140
Φ385 f7

GTN13 R

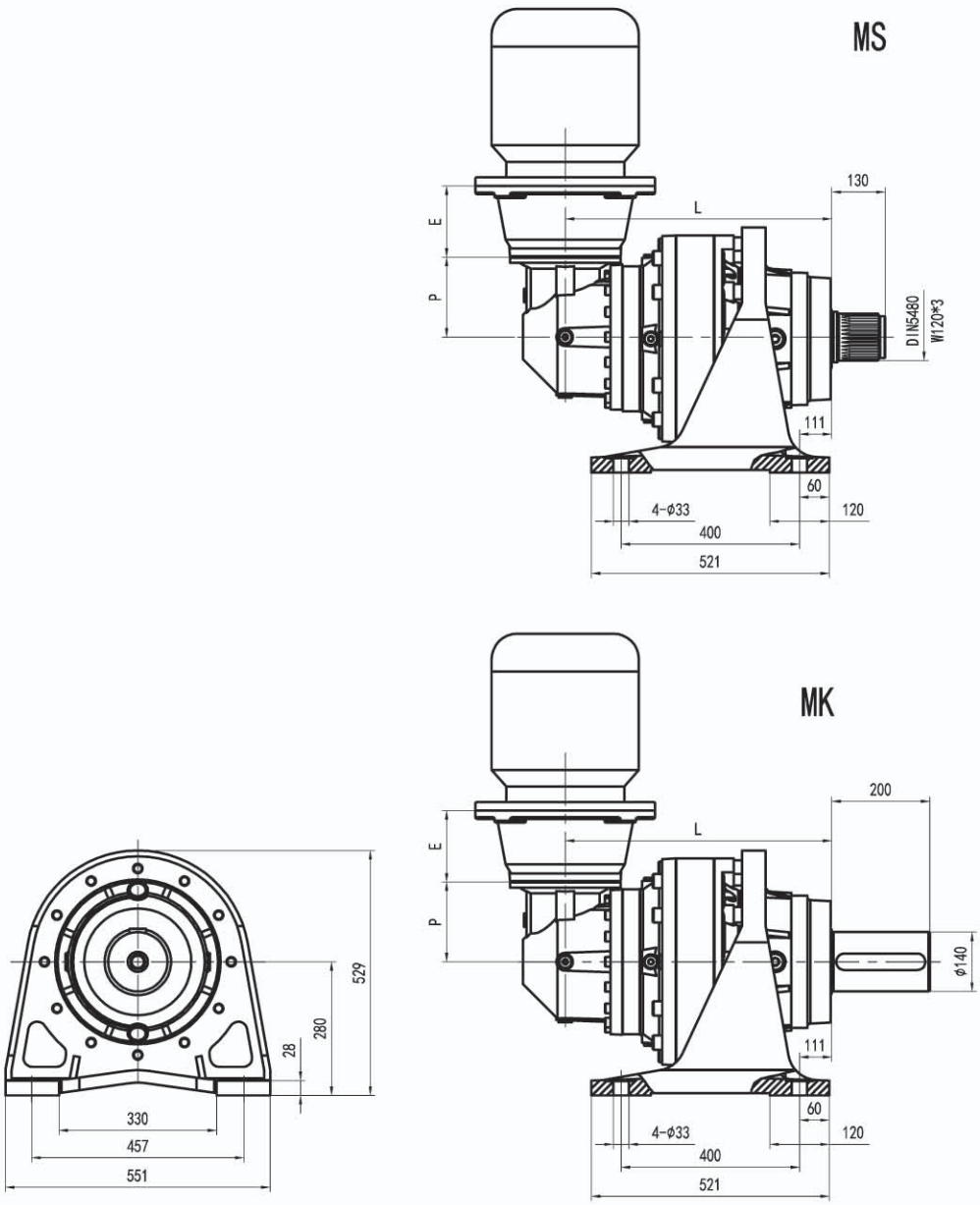

LP输出 LP VERSION	最大输出扭矩 MAX. TRANSMISSIBLE TORQUE	66000 Nm

	L				P	Kg				E											
	HS HK	MK MS	LSH	LP		HS HK	MK MS	LSH	LP	IEC 71	IEC 80	IEC 90	IEC 100	IEC 112	IEC 132	IEC 160	IEC 180	IEC 200	IEC 225	IEC 250
GTN13 R2 (B)	384	611	384	384	345	360	450	330	350								152	182	212	193
GTN13 R2 (C)	384	611	384	384	390	370	460	340	360								152	182	212	193
GTN13 R3	423	650	423	423	225	340	430	310	330						114	144	144	174		
GTN13 R4	485	712	485	485	140	322	412	292	312	65	84	84	94	94	114	144				

GTN13 R

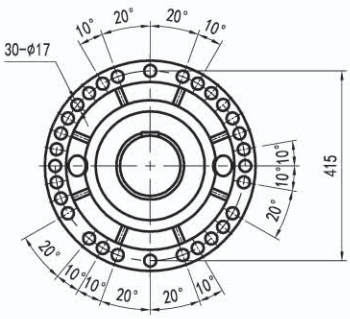

HS

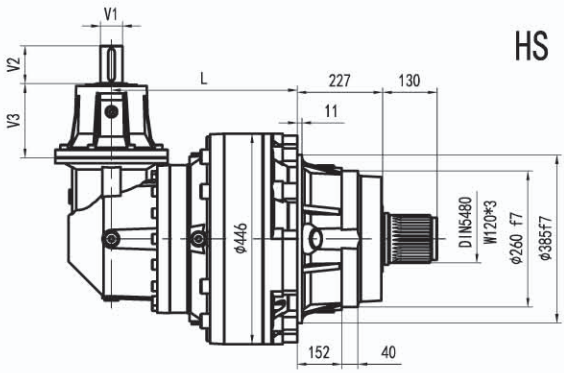

HK

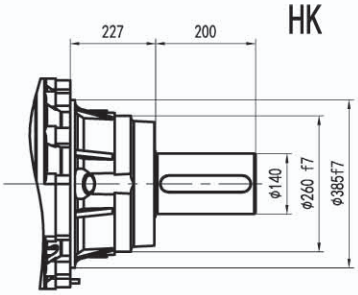

LSH

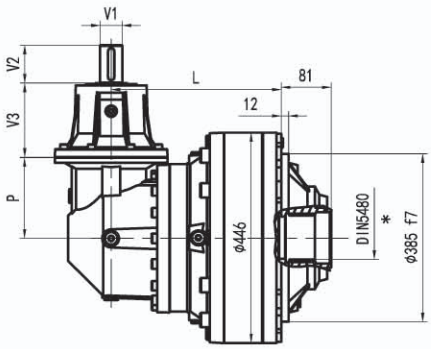

LP

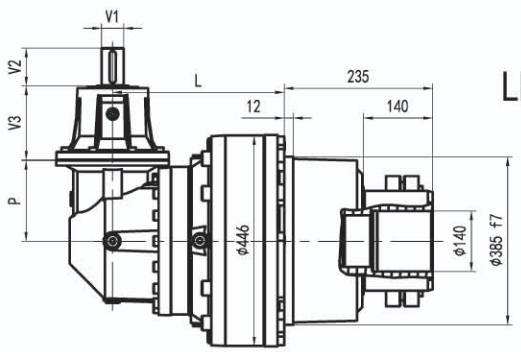

GTN13 R

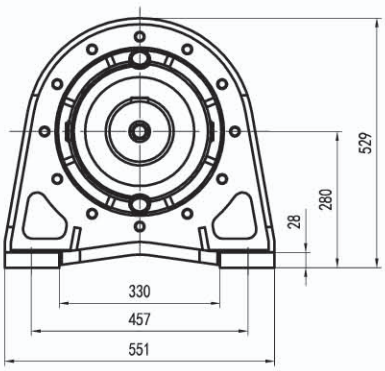

MK

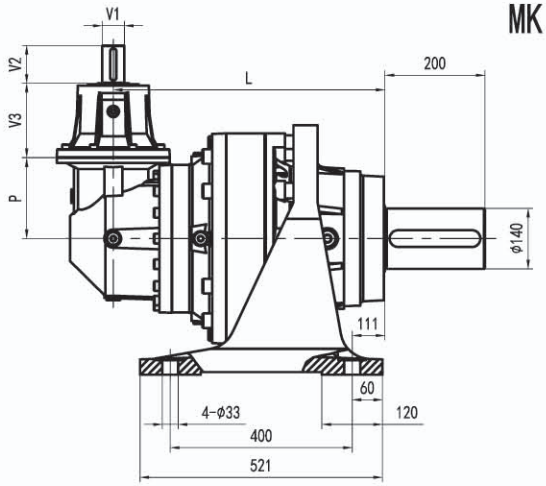

MS

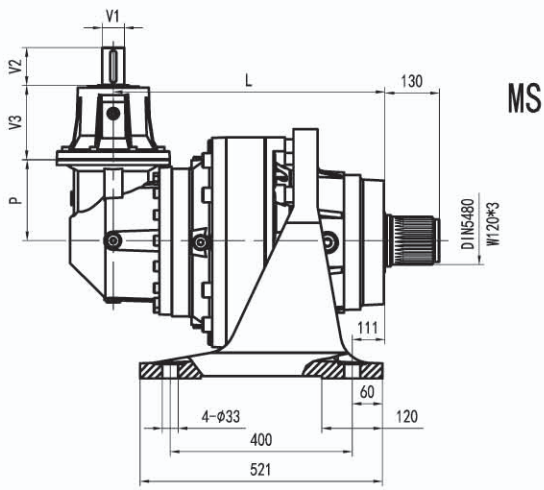

LP输出 LP VERSION	最大输出扭矩 MAX. TRANSMISSIBLE TORQUE	66000 Nm

	L				P	Kg											
	HS HK	MK MS	LSH	LP		HS HK	MK MS	LSH	LP	V1	V2	V3	Kg	V1	V2	V3	Kg
GTN13 R2 (B)	384	611	384	384	345	360	450	330	350	60	105	307	23				
GTN13 R2 (C)	384	611	384	384	390	370	460	340	360	60	105	307	23				
GTN13 R3	423	650	423	423	225	340	430	310	330	48	82	239	15				
GTN13 R4	485	712	485	485	140	322	412	292	312	24	36	137.5	6	38	58	158	7

GTN13 L - GTN13 R

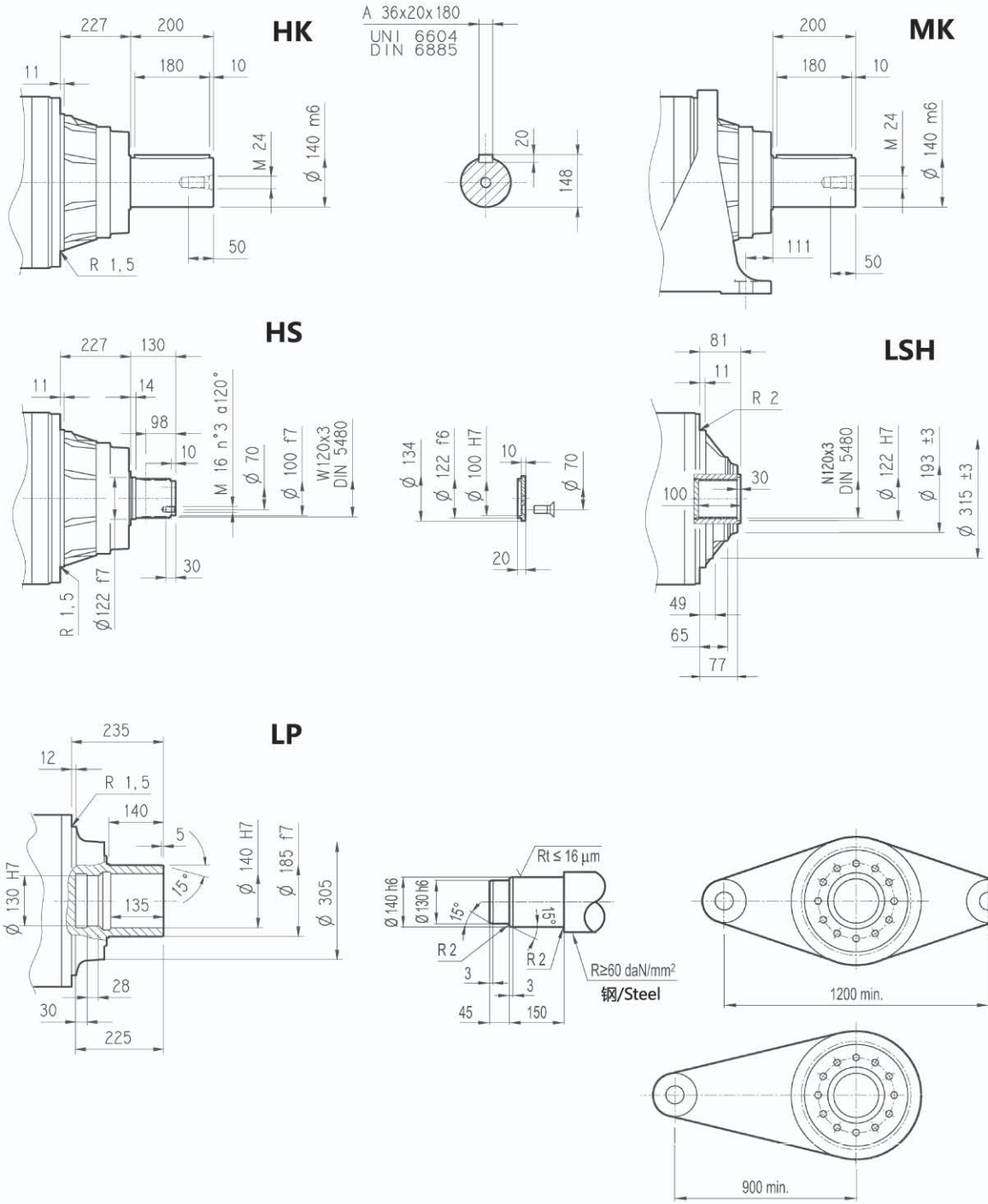

LP输出 LP VERSION	最大输出扭矩 MAX. TRANSMISSIBLE TORQUE	66000 Nm

GTN13 L - GTN13 R

法兰/Flange

FOA



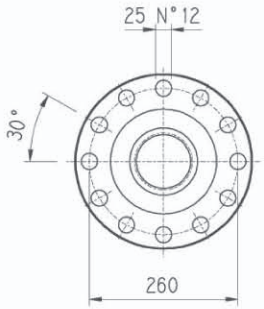

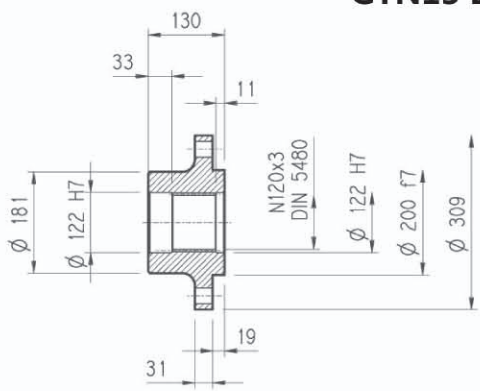

材料:钢C40
Material:SteelC40

输出齿轮/Output pinions

PM...



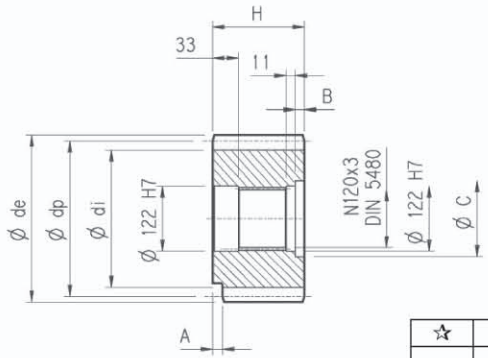

	m	z	x	dp	di	de	H	A	B	C	☆
PM1601	16	17	0.500	272	247	315	135	0	5	136	□
PM1801	18	18	0.333	324	294	365	140	0	10	140	□

☆	材料 / Material
□	39NiCrMo3 调制钢 Steel 39NiCrMo3 hardened and tempered
■	18NiCrMo5 表面渗碳钢 18NiCrMo5 Case hardened

套筒联轴器/Sleeve couplings

HOS



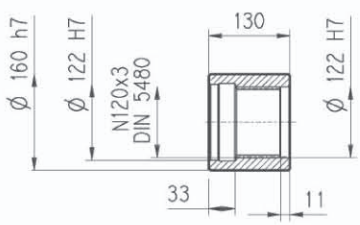

材料:16CrNi4
Material:Steel 16CrNi4

花键/Splined bars

SOF



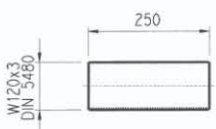

LSH

表面硬化钢18NiCrMo5 UNI 5331表面硬化必须达到50-55 HRC
Case hardening steel 18NiCrMo5 UNI 5331
Must be case hardened5 0-55 HRC

锁紧盘/Shrink disc

LOP



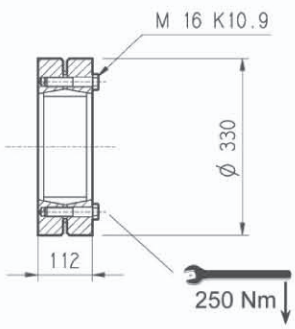

GTN13 L - GTN13 R

输入轴/Input shaft

S__

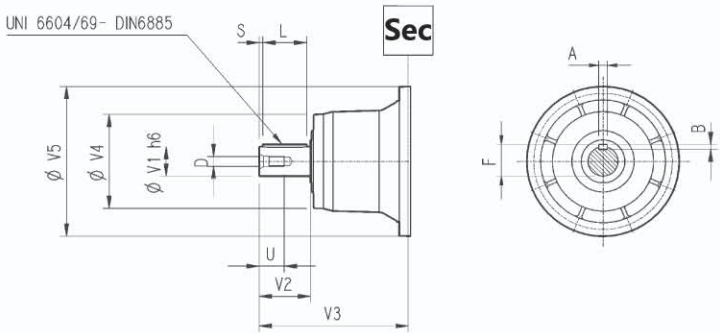

SV__

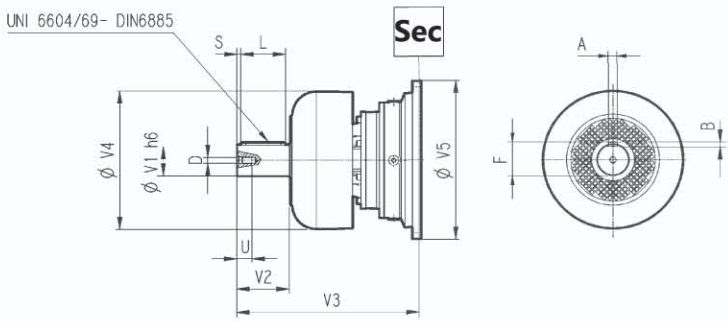

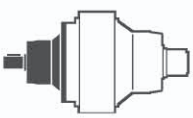

	CODE	V1	V2	V3	V4	V5	A	B	F	L	S	D	U
GTN13L1	S11B	80	130	343	200	428	22	14	85	110	10	M16	36
	SV11B	80	130	451	347.5	445	22	14	85	110	10	M16	36
GTN13L2	S07B	80	130	315	200	345	22	14	85	110	10	M16	36
	SV07B	80	130	375	347.5	348	22	14	85	110	10	M16	36
	S07A	60	105	313	155	345	18	11	64	90	7.5	M16	36
	SV07A	60	105	363	309	348	18	11	64	90	7.5	M16	36
GTN13L3	S05B	48	82	239	155	245	14	9	51.5	70	6	M16	36
	SV05B	48	82	276	219.5	244	14	9	51.5	70	6	M16	36
GTN13L4	S01A	24	36	137.5	120	186	8	7	27	30	3	M8	19
	S01B	38	58	158	120	186	10	8	41	50	4	M12	28
GTN13R3	S05B	48	82	239	155	245	14	9	51.5	70	6	M16	36
	SV05B	48	82	276	219.5	244	14	9	51.5	70	6	M16	36
GTN13R2(B)(C)	S06B	60	105	307	155	292	18	11	64	90	7.5	M16	36
	SV06B	60	105	357	309	292	18	11	64	90	7.5	M16	36
GTN13R4	S01A	24	36	137.5	120	186	8	7	27	30	3	M8	19
	S01B	38	58	158	120	186	10	8	41	50	4	M12	28

不带电机的输入法兰尺寸
Input dimension without motor adaptor

S__

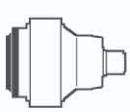

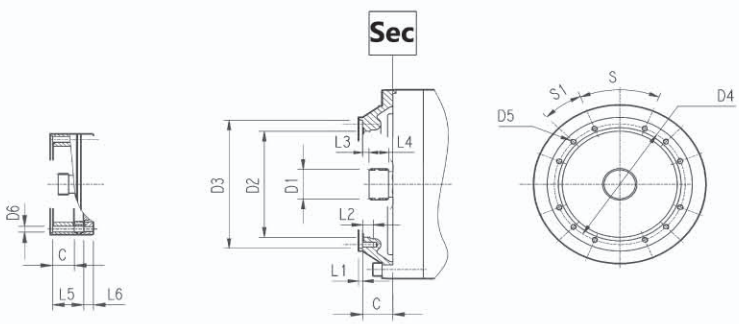

	CODE	C	D1	D2	D3	D4	D5	D6	L1	L2	L3	L4	L5	L6	S	S1	输入 Input
GTN13L1	S9AD	75	80x74DIN5482	270	335H7	314	M16n°8	/	5	30	9.5	40	/	/	60°	30°	D
GTN13L2	S9AB	51	58x53DIN5482	195	236H7	222	M10n°12	/	4	18	11	22	/	/	45°	22.5°	B
GTN13L3	S9AA	37	40x36DIN5482	140	178H7	165	M10n°8	/	4	18	9	18	/	/	45°	45°	A
GTN13L4	S9AA	37	40x36DIN5482	140	178H7	165	M10n°8	11	4	/	9	18	65	18	45°	45°	A
GTN13R3	S9AA	37	40x36DIN5482	140	178H7	165	M10n°8	11	4	18	9	18	/	/	45°	45°	A
GTN13R2(B)(C)	S9AB	45	58x53DIN5482	195	236H7	222	M10n°12	/	4	18	11	22	/	/	45°	22.5°	B
GTN13R4	S9AA	37	40x36DIN5482	140	178H7	165	M10n°8	11	4	/	9	18	37	18	45°	45°	A

GTN13 L - GTN13 R

输出轴上允许的径向和轴向载荷
$Fh_2:n_2.h=10000$

Permissible radial and axial loads on output shaft with Fh_2 $n_2 \cdot h=10000$

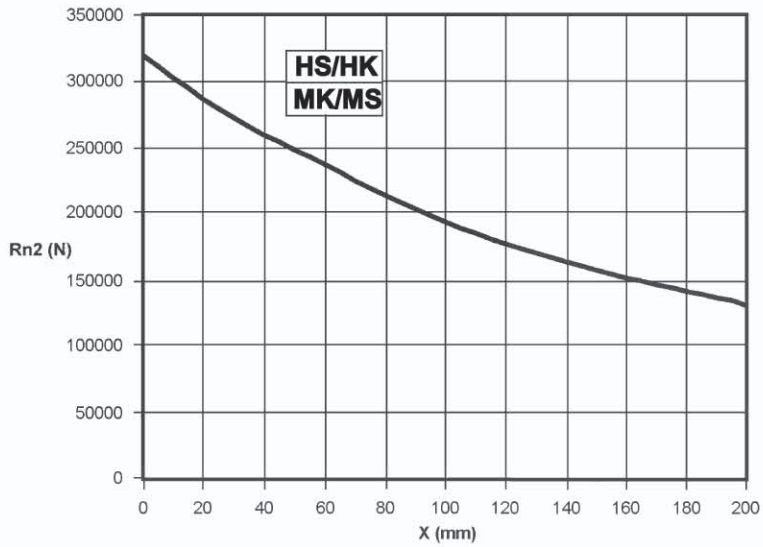

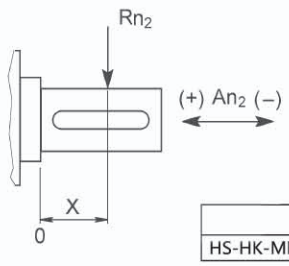

	An2(+)	An2(-)
HS-HK-MK-MS	250000	160000

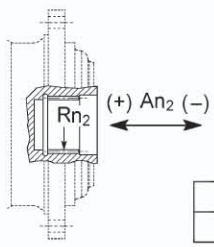

	Rn2	An2(+/-)
LSH	80000	75000

轴上的载荷修正系数 fh_2 Load corrective factor fh_2 on shafts	$Fh_2=n_2 \cdot h$		10000	25000	50000	100000	500000	1000000
	fh_2	LSH	1	0.74	0.58	0.46	0.27	0.21
		HS-HK-MK-MS	1	0.76	0.61	0.50	0.31	0.25

输入轴上允许的径向和轴向载荷
$Fh_1 n_1.h=250000$

Permissible radial loads on input shaft with $Fh_1:n_1 \cdot h=250000$

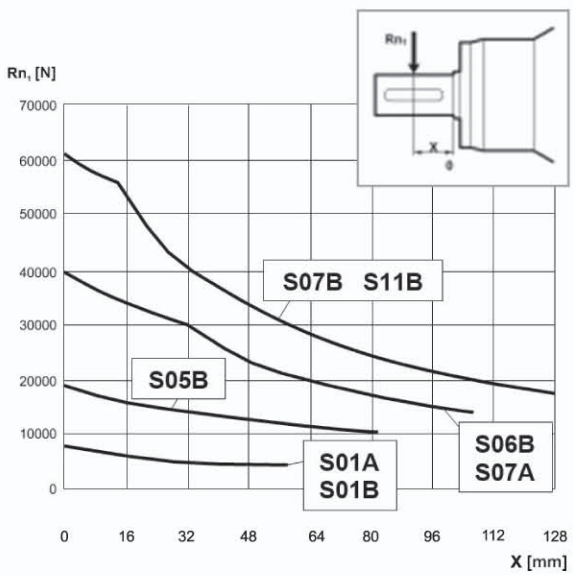

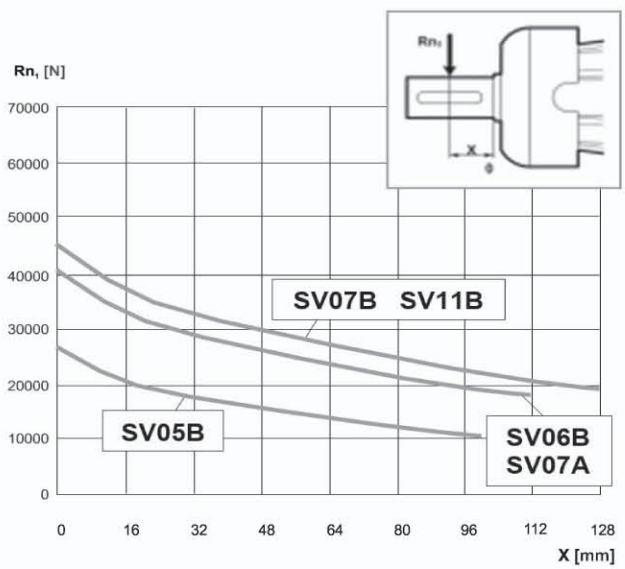

轴上的载荷修正系数 fh_1 Load corrective factor fh_1 on shafts	$Fh_1=n_1 \cdot h$	250000	500000	1000000	2000000	5000000	10000000
	fh_1	1	0.79	0.63	0.50	0.37	0.29

GTN14 L

HS

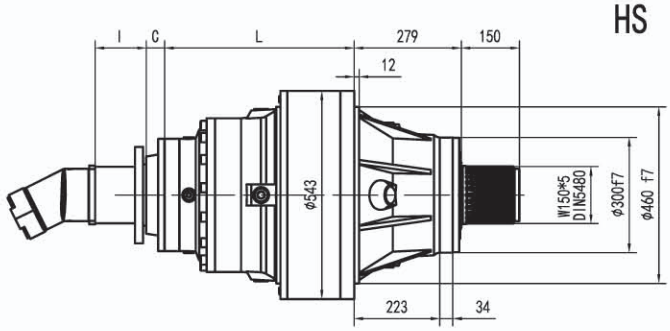

HK

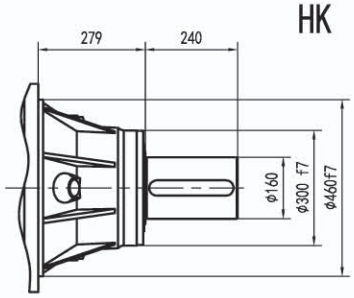

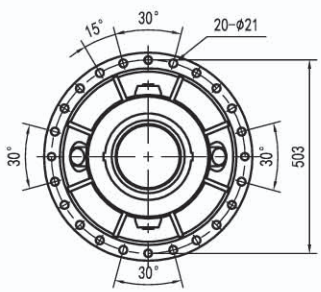

LSH

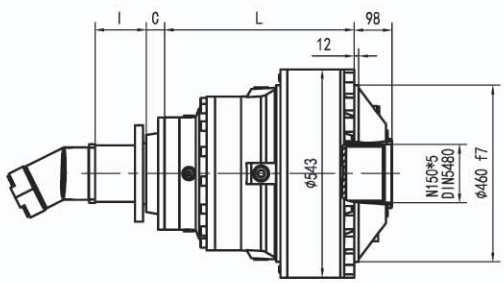

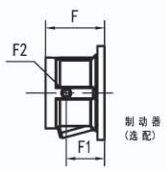

LP

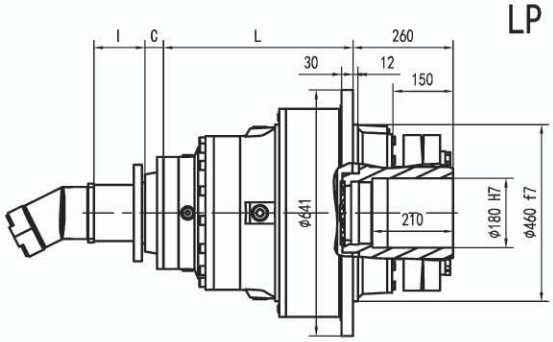

GTN14 L

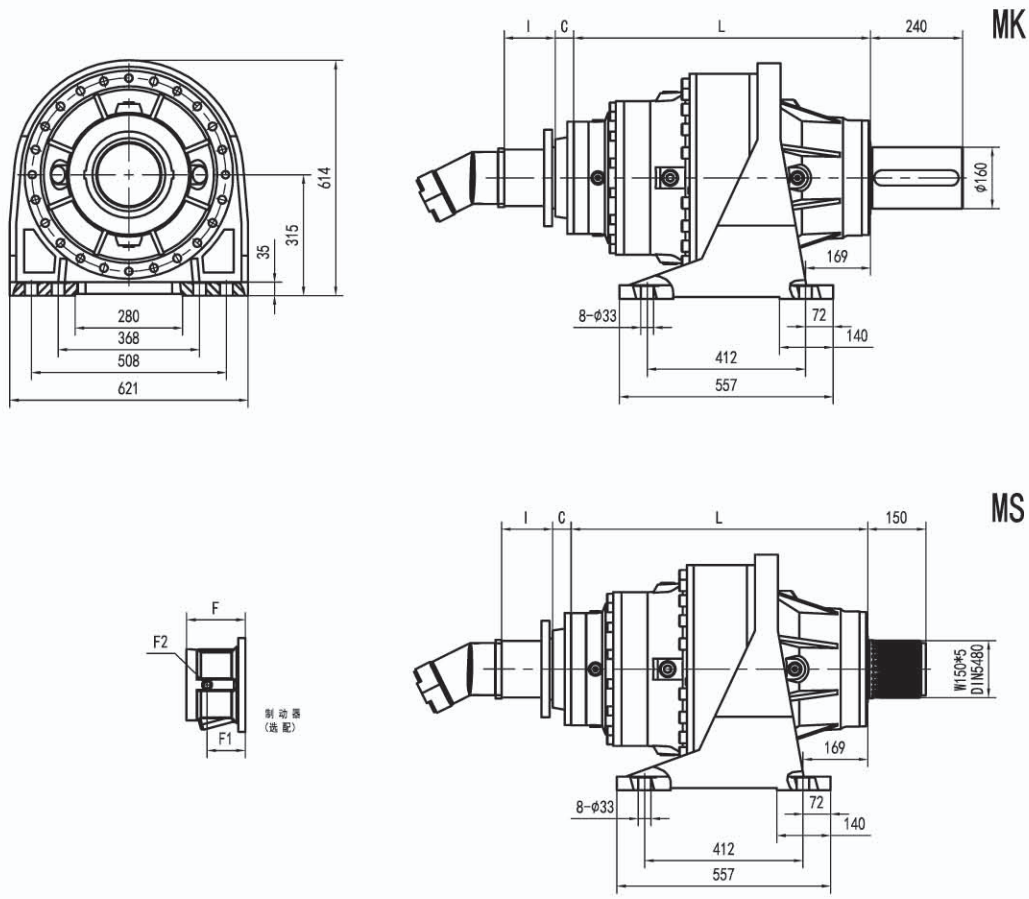

LP输出 LP VERSION	最大输出扭矩 MAX. TRANSMISSIBLE TORQUE	126000 Nm

	L				Kg												
	HS HK	MK MS	LSH	LP	HS HK	MK MS	LSH	LP	C	输入 Input	I	F	F1	F2	类型 Type	输入 Input	Kg
GTN14 L1	174	453	174	174	370	500	280	330	120	L	联系厂家						
GTN14 L2	362	631	362	362	405	535	345	365	88	C		195	147	1/4 G	6	B	28
GTN14 L3	498	777	498	498	450	580	360	410	45	B		145	95	1/4 G	5	B	16
GTN14 L4	563	842	563	563	462	592	372	422	37	A		105	65	1/4 G	5	A	10

GTN14 L

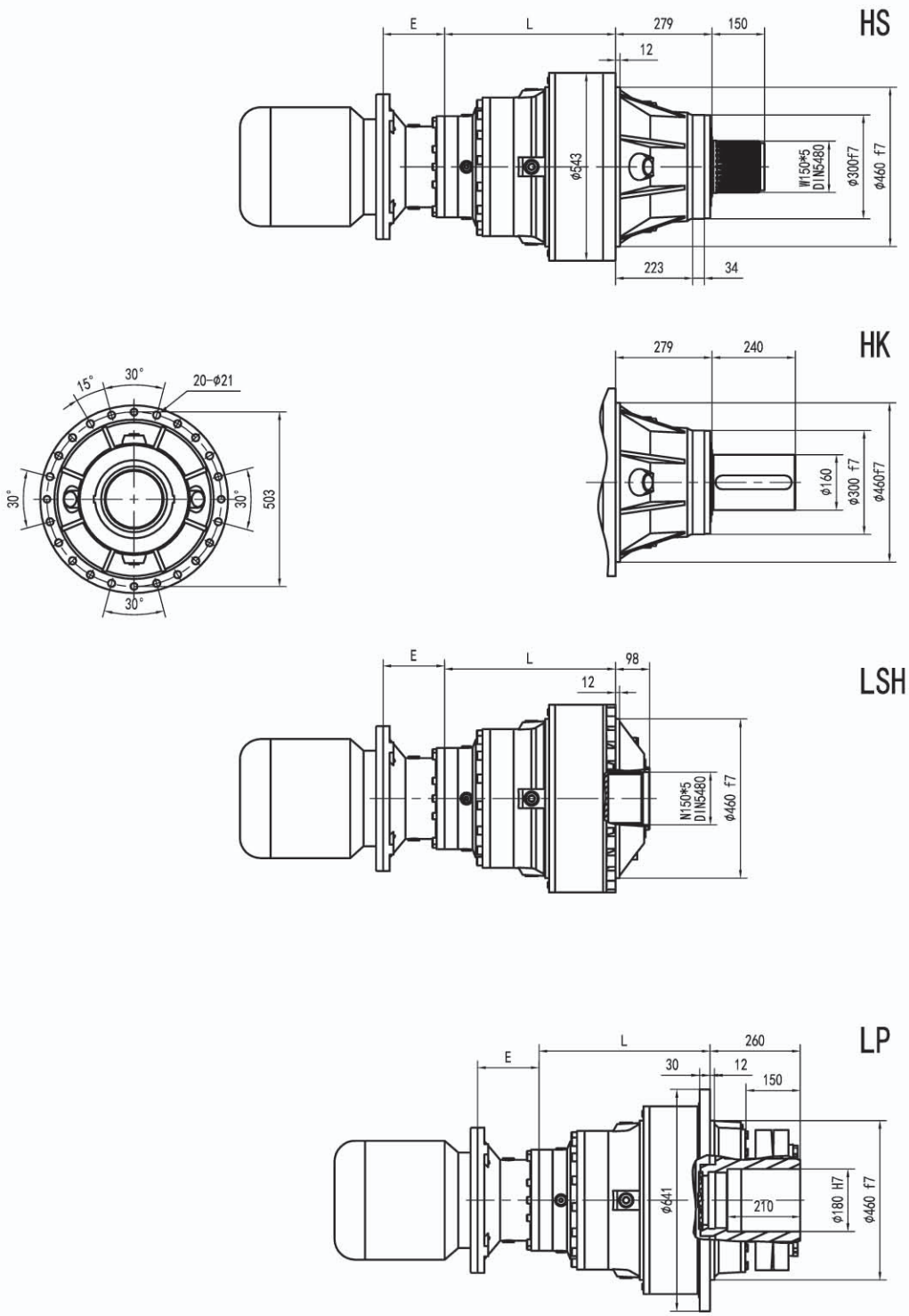
HS
E
L
279
150
12
φ543
W150*5
DIN5480
φ300 f7
φ460 f7
223
34
HK
279
240
φ160
φ300 f7
φ460f7
15°
30°
20-φ21
30°
30°
503
30°
LSH
E
L
98
12
N150*5
DIN5480
φ460 f7
LP
E
L
260
30
12
150
φ441
270
φ180 H7
φ460 f7

GTN14 L

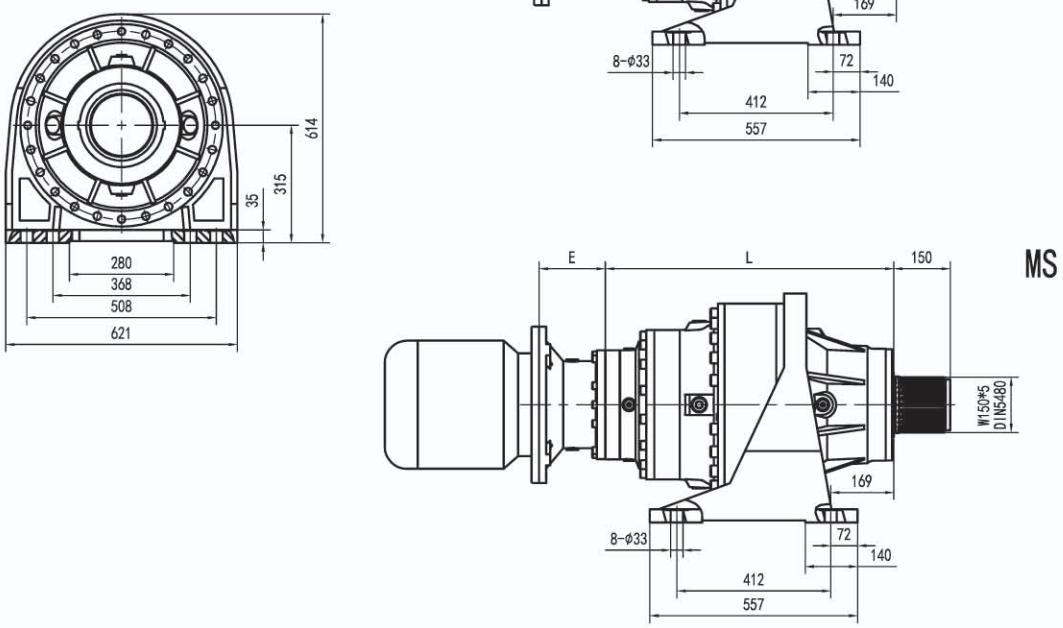

LP输出 LP VERSION	最大输出扭矩 MAX. TRANSMISSIBLE TORQUE	126000 Nm

	L				Kg				E					
	HS HK	MK MS	LSH	LP	HS HK	MK MS	LSH	LP	IEC 132	IEC 160	IEC 180	IEC 200	IEC 225	IEC 250
GTN14 L1	174	453	174	174	370	500	280	330						
GTN14 L2	362	631	362	362	405	535	345	365					301	281
GTN14 L3	498	777	498	498	450	580	360	410			152	182	212	193
GTN14 L4	563	842	563	563	462	592	372	422	114	144	144	174		

GTN14 L

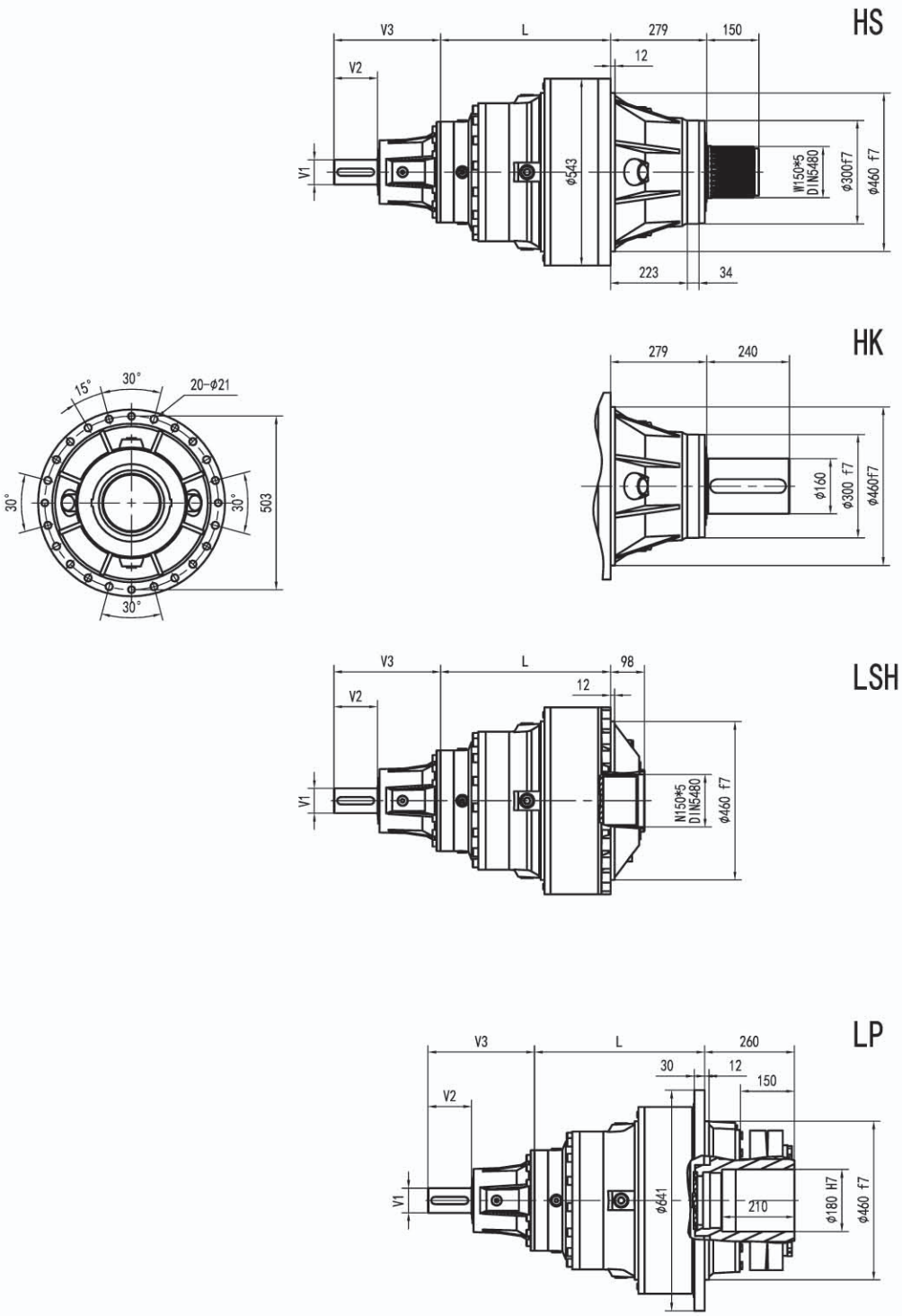
HS
V3
L
279
150
12
V2
V1
φ543
W150*5
DIN5480
φ300 f7
φ460 f7
223
34
HK
279
240
φ160
φ300 f7
φ460 f7
15°
30°
20-φ21
30°
30°
503
30°
LSH
V3
L
98
12
V2
V1
N150*5
DIN5480
φ460 f7
LP
V3
L
260
30
12
150
V2
V1
φ641
210
φ180 H7
φ460 f7

GTN14 L

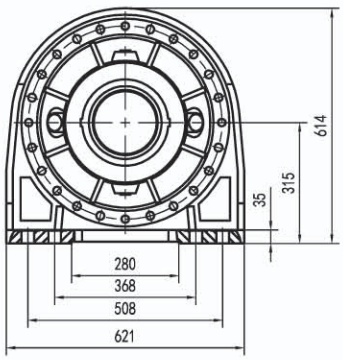

MK

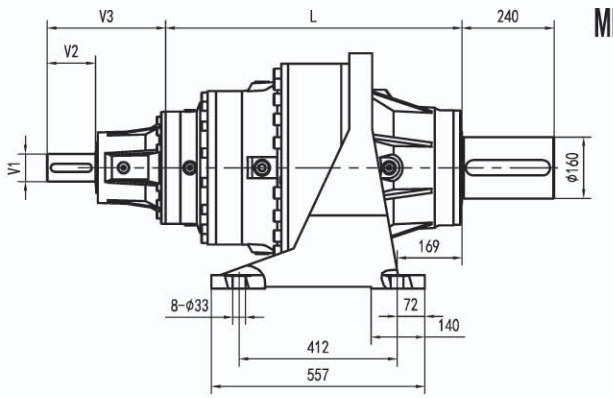

MS

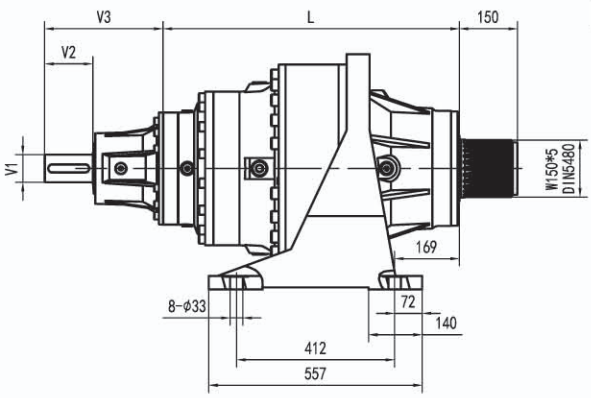

LP输出 LP VERSION	最大输出扭矩 MAX. TRANSMISSIBLE TORQUE	126000 Nm

	L				Kg				V1	V2	V3	Kg	V1	V2	V3	Kg
	HS HK	MK MS	LSH	LP	HS HK	MK MS	LSH	LP								
GTN14 L1	174	453	174	174	370	500	280	330								
GTN14 L2	362	631	362	362	405	535	345	365	80	130	377	50				
GTN14 L3	498	777	498	498	450	580	360	410	60	105	357	23				
GTN14 L4	563	842	563	563	462	592	372	422	48	82	239	15				

GTN14 R

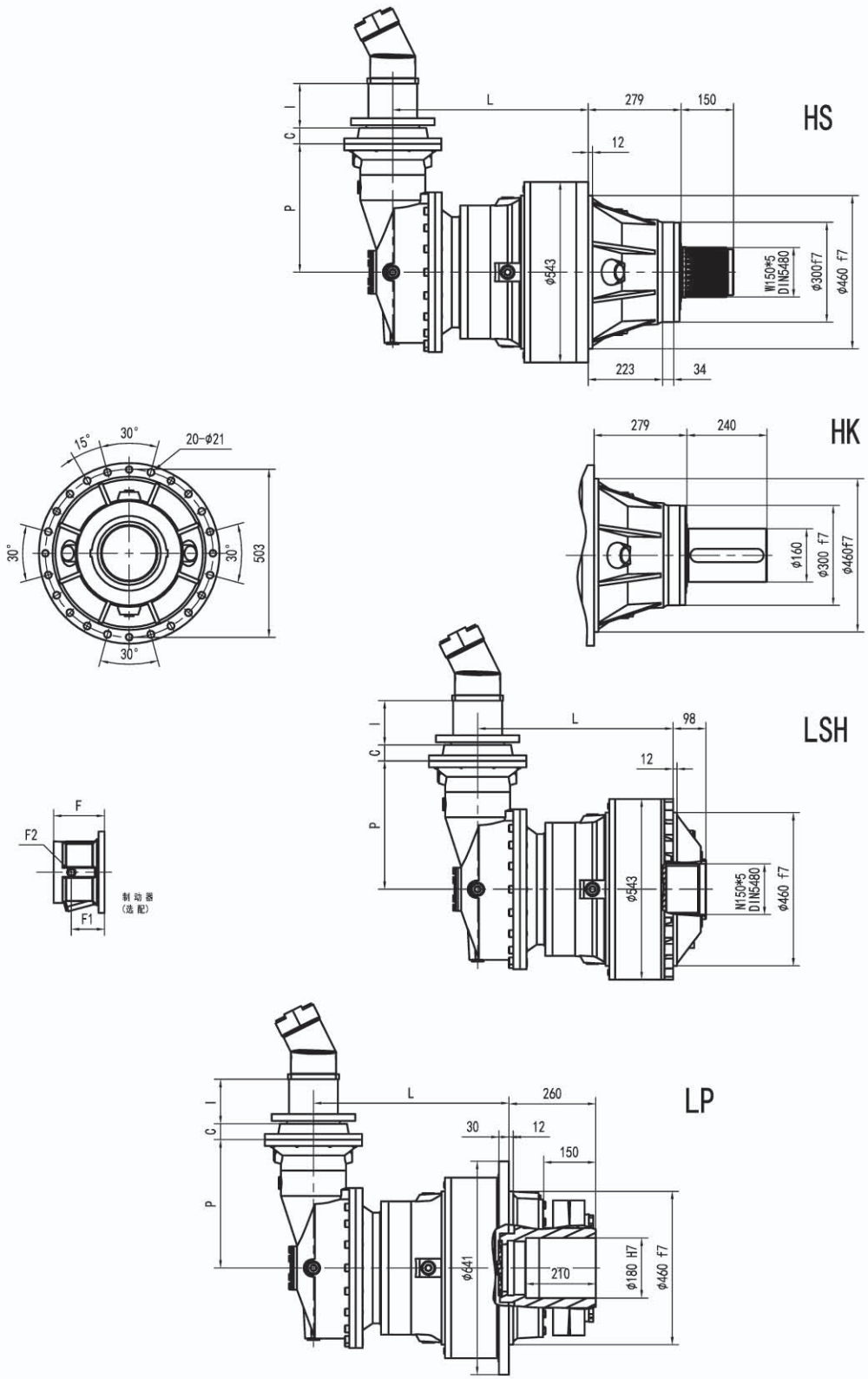
HS
L
279
150
12
I
C
P
φ543
W150*5
DIN5480
φ300f7
φ460 f7
223
34
HK
279
240
φ160
φ300 f7
φ460f7
15°
30°
20-φ21
30°
30°
30°
503
LSH
L
98
12
I
C
P
φ543
W150*5
DIN5480
φ460 f7
F
F2
F1
制动器
(选 配)
LP
L
260
30
12
150
I
C
P
φ441
210
φ180 H7
φ460 f7

GTN14 R

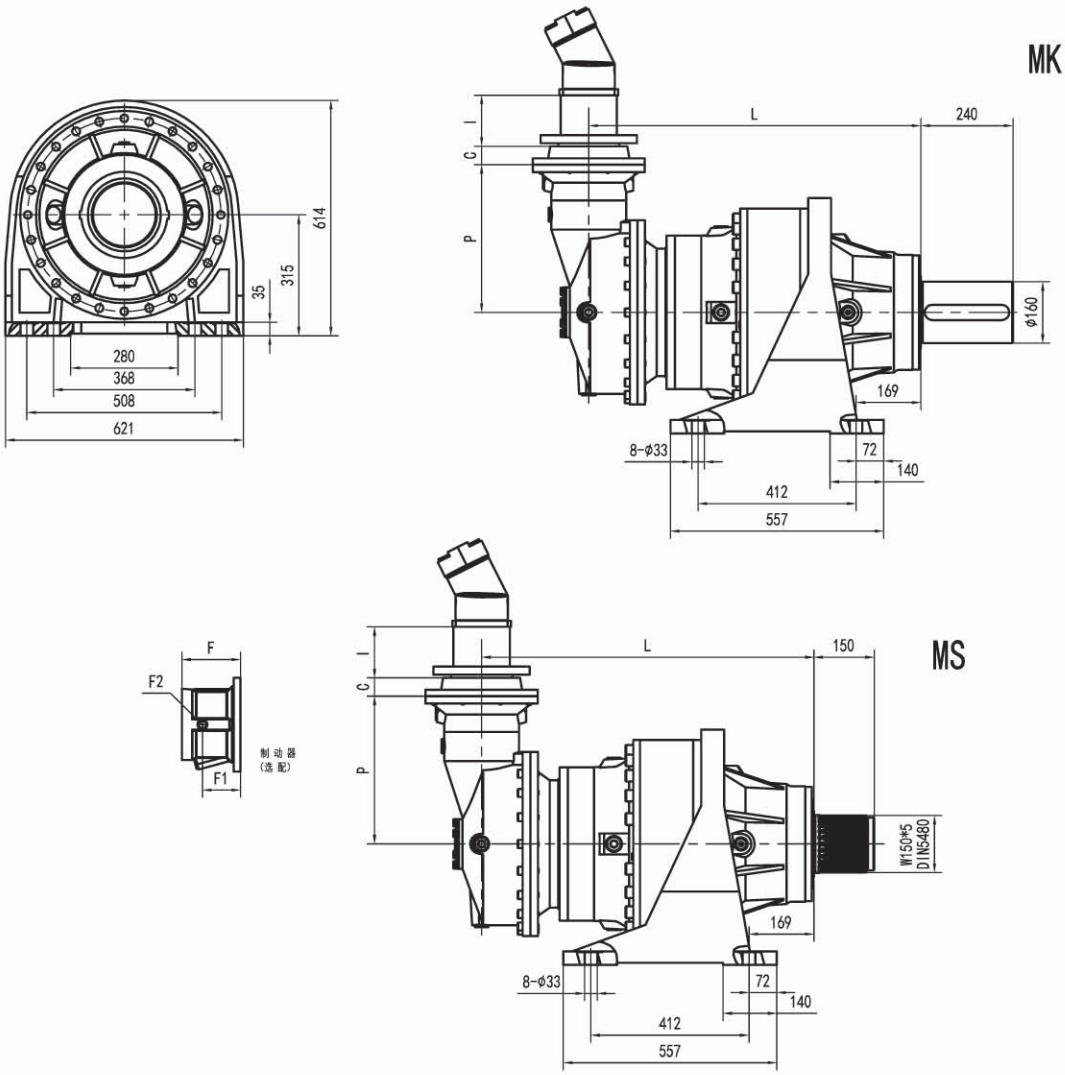

LP输出 LP VERSION	最大输出扭矩 MAX. TRANSMISSIBLE TORQUE	126000 Nm

	L				P	Kg				C	输入 Input	I	F	F1	F2	类型 Type	输入 Input	Kg
	HS HK	MK MS	LSH	LP		HS HK	MK MS	LSH	LP									
GTN14 R3(B)	569	848	569	569	345	540	670	450	500	45	B	联系厂家	195	147	1/4 G	6	B	28
GTN14 R3(C)	587	856	587	587	390	515	645	425	475	45	B		195	147	1/4 G	6	B	28
GTN14 R4	635	914	635	635	140	370	600	380	430	37	A		105	65	1/4 G	4	A	10

GTN14 R

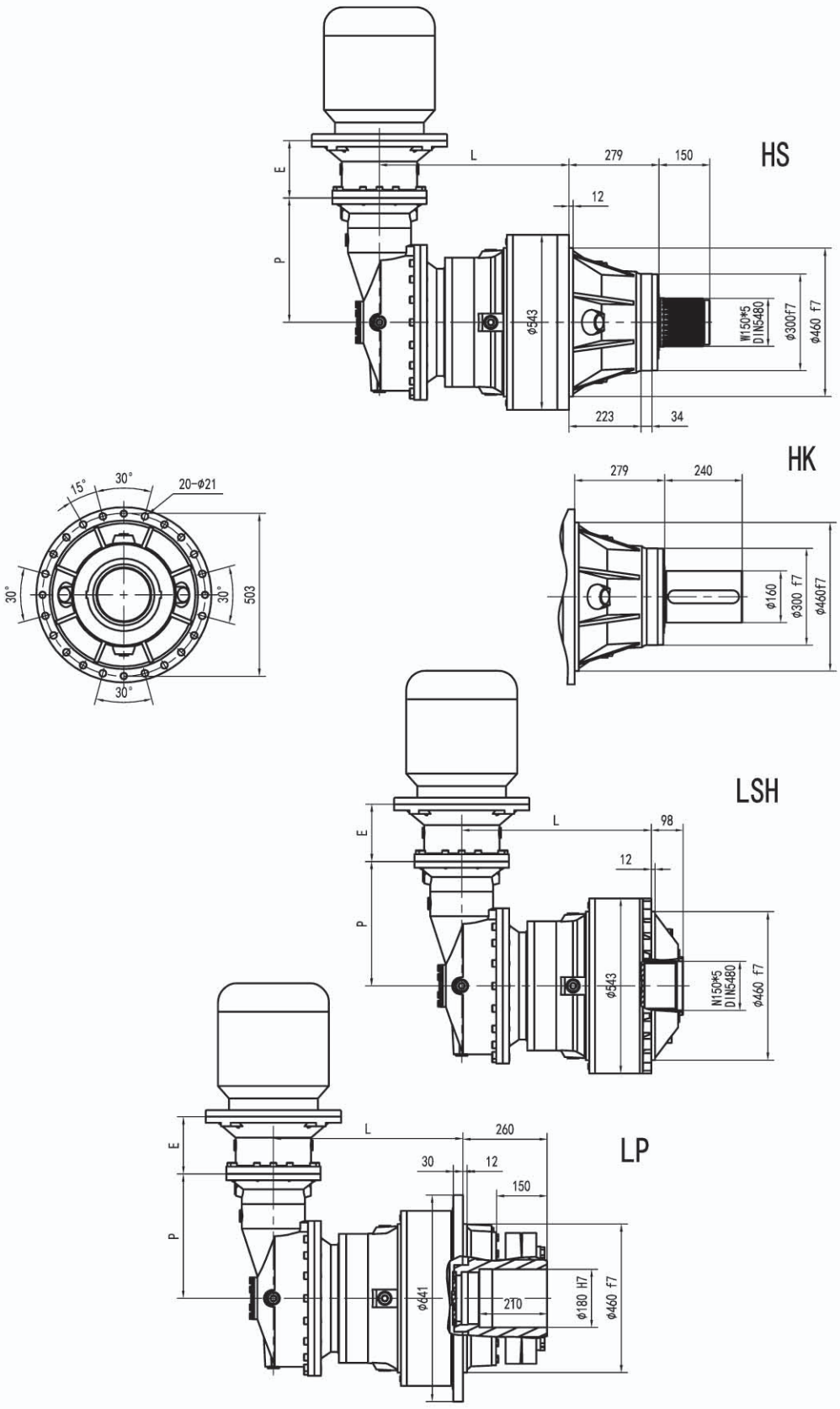
HS
L
279
150
12
E
P
φ543
N150*5
DIN5480
φ300 f7
φ460 f7
223
34
HK
279
240
φ160
φ300 f7
φ460f7
15°
30°
20-φ21
30°
30°
30°
503
LSH
L
98
12
E
P
φ543
N150*5
DIN5480
φ460 f7
LP
L
260
30
12
150
E
P
φ641
210
φ180 H7
φ460 f7

GTN14 R

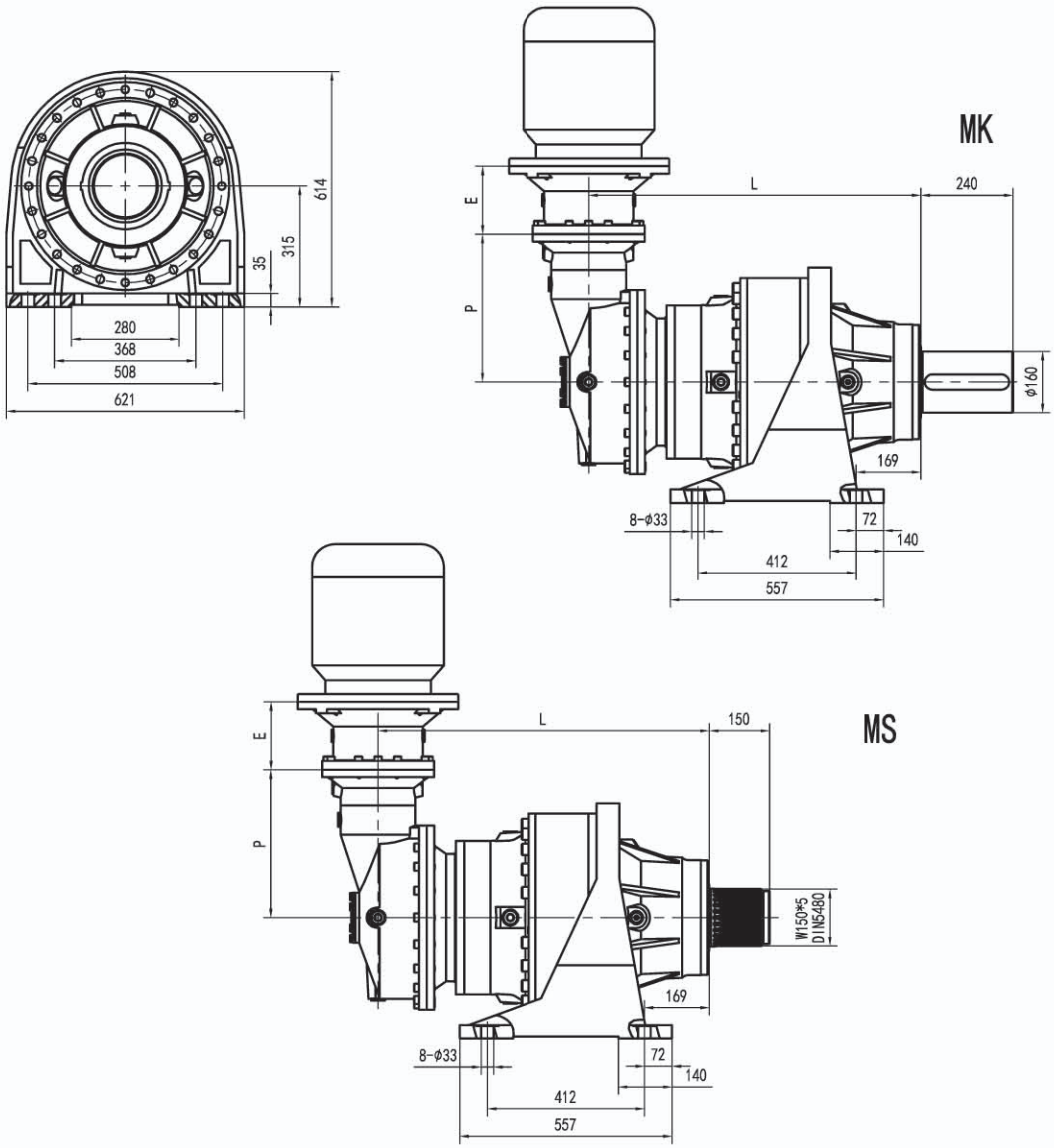

LP输出 LP VERSION	最大输出扭矩 MAX. TRANSMISSIBLE TORQUE	126000 Nm

	L				P	Kg				E							
	HS HK	MK MS	LSH	LP		HS HK	MK MS	LSH	LP	IEC 100	IEC 112	IEC 132	IEC 160	IEC 180	IEC 200	IEC 225	IEC 250
GTN14 R3(B)	569	848	569	569	345	540	670	450	500					152	182	212	193
GTN14 R3(C)	587	856	587	587	390	515	645	425	475			114	144	144	174		
GTN14 R4	635	914	635	635	140	370	600	380	430	94	94	114	144				

GTN14 R

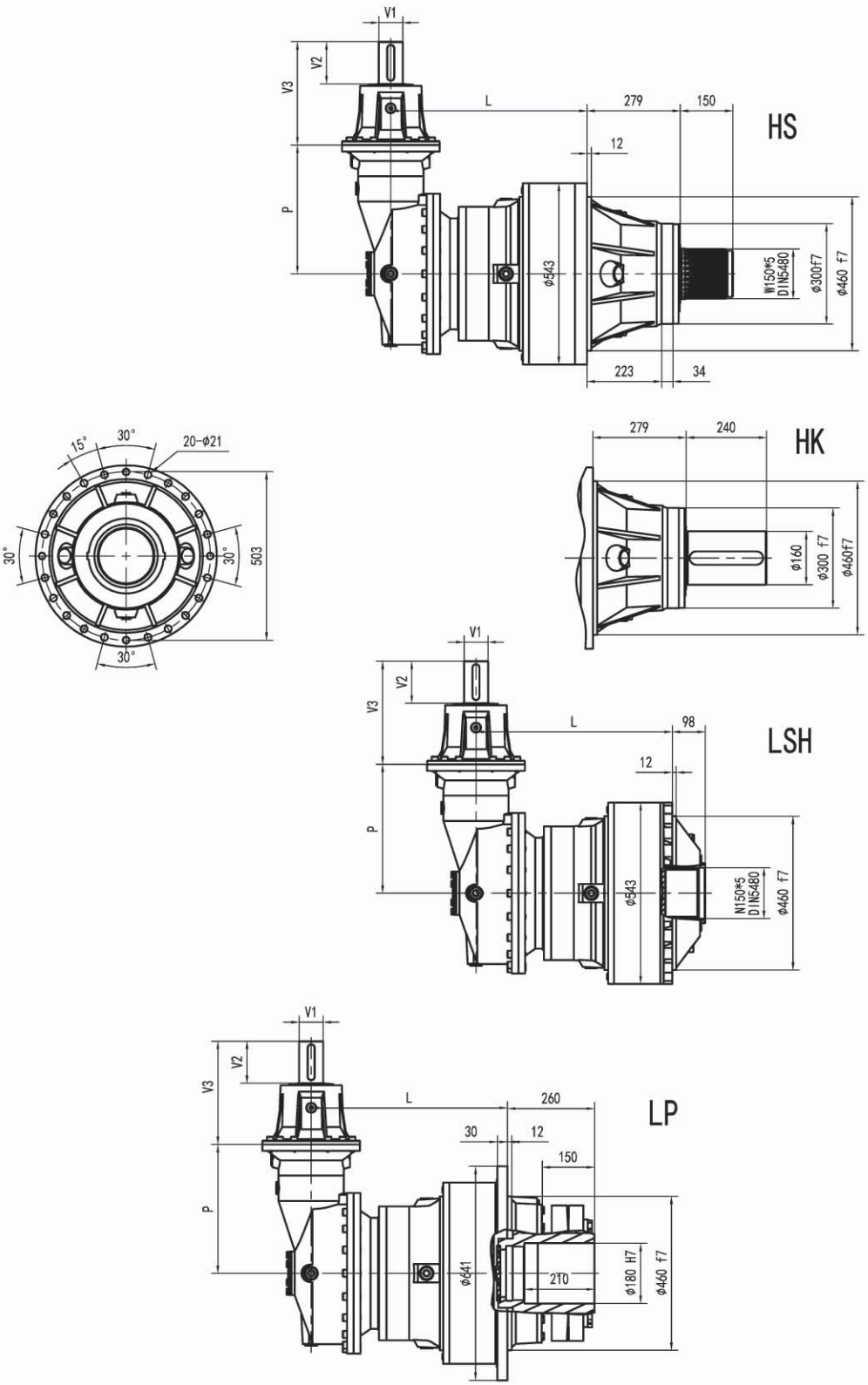
V1
V2
V3
P
L
279
150
12
HS
Φ543
W150*5
DIN5480
Φ300f7
Φ460 f7
223
34
15°
30°
20-Φ21
30°
30°
30°
503
279
240
HK
Φ160
Φ300 f7
Φ460f7
V1
V2
V3
P
L
98
12
LSH
Φ543
N150*5
DIN5480
Φ460 f7
V1
V2
V3
P
L
260
30
12
150
LP
Φ641
210
Φ180 H7
Φ460 f7

GTN14 R

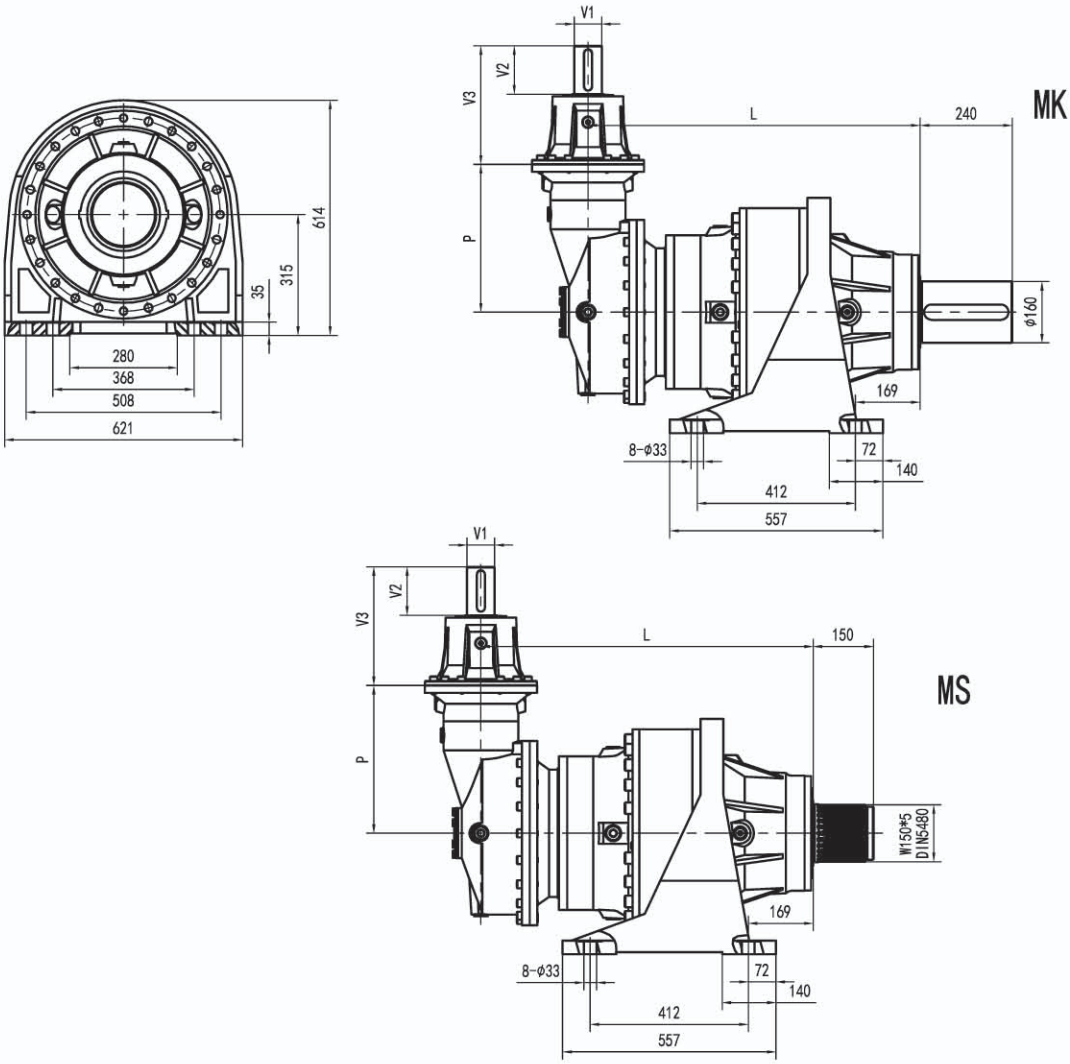

LP输出 LP VERSION	最大输出扭矩 MAX. TRANSMISSIBLE TORQUE	126000 Nm

	L				P	Kg				V1	V2	V3	Kg	V1	V2	V3	Kg
	HS HK	MK MS	LSH	LP		HS HK	MK MS	LSH	LP								
GTN14 R3(B)	569	848	569	569	345	540	670	450	500	60	105	307	23				
GTN14 R3(C)	587	856	587	587	390	515	645	425	475	60	105	307	23				
GTN14 R4	635	914	635	635	140	370	600	380	430	24	36	137.5	6	38	58	158	7

GTN14 L-GTN14 R

HK

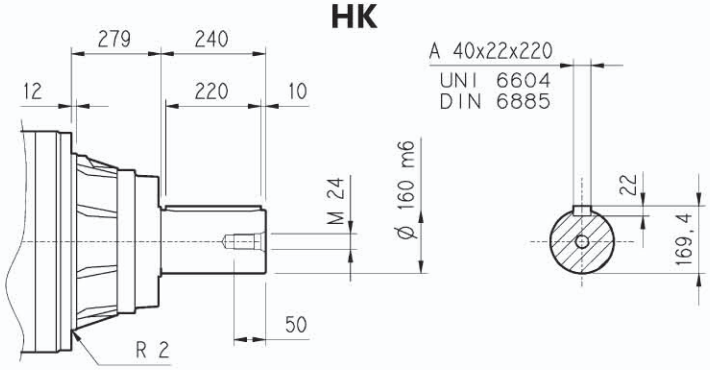

MK

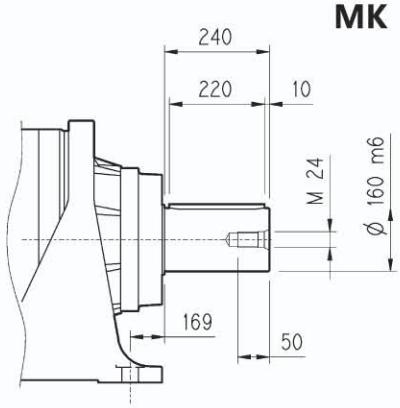

HS

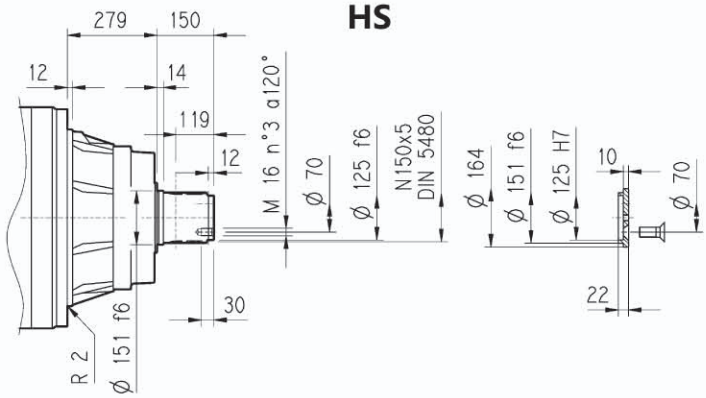

LSH

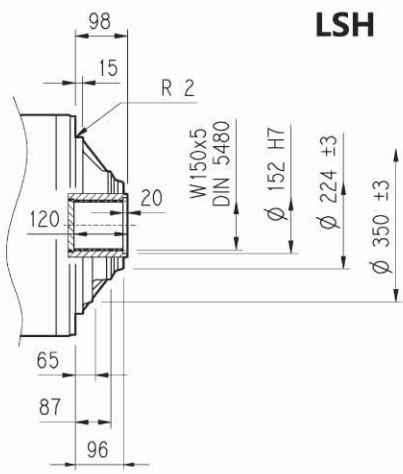

LP

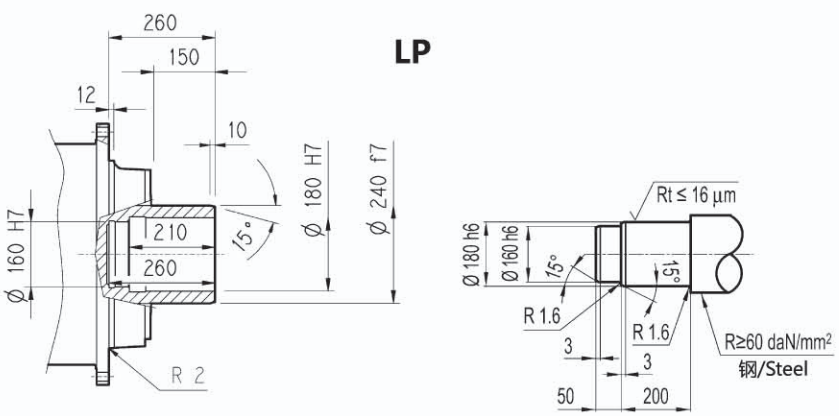

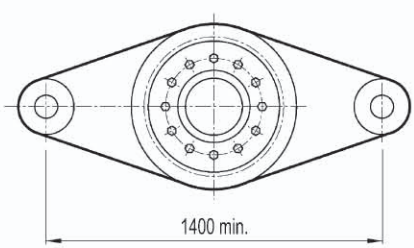

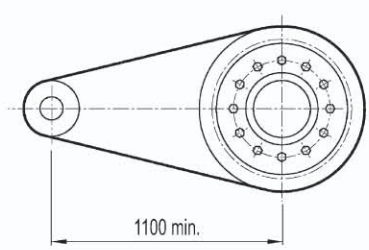

LP输出 LP VERSION	最大输出扭矩 MAX. TRANSMISSIBLE TORQUE	126000 Nm

GTN14 L-GTN14 R

法兰 / Flange

FOA



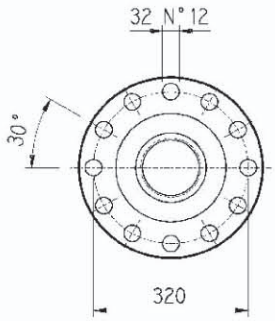

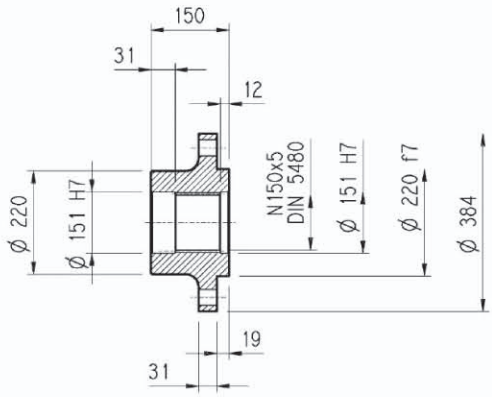

材料: 钢 C40

Material : Steel C40

输出齿轮/ Output pinions

PM...



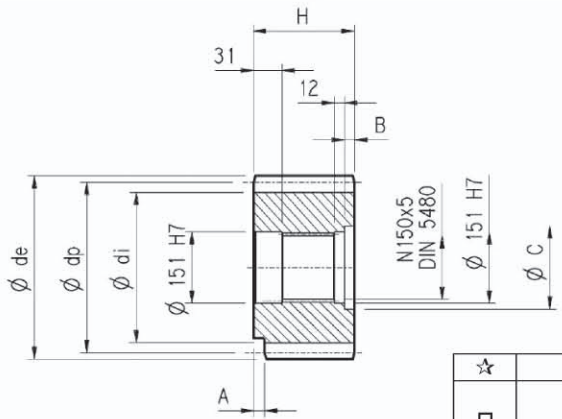

	m	z	x	dp	di	de	H	A	B	C	☆
PM1801	18	16	0.500	288	261	342	160	0	10	166	■
PM1802	18	16	0.617	288	271	339	150	30	0	0	□

☆	材料 / Material
□	39NiCrMo3 调制钢 Steel 39NiCrMo3 hardened and tempered
■	18NiCrMo5 表面渗碳钢 18NiCrMo5 Case hardened

套筒联轴器 / Sleeve couplings

HOS



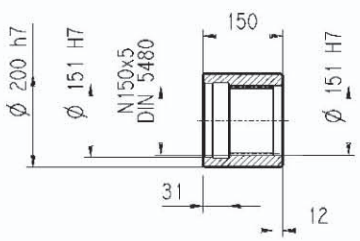

材料: 16CrNi4

Material : Steel 16CrNi4

花键 / Splined bars

SOF



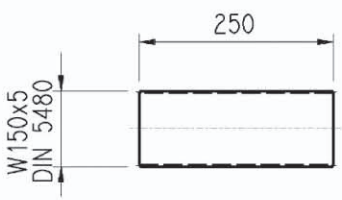

表面硬化钢 18NiCrMo5 UNI 5331 表面硬化必须达到 50-55 HRC

Case hardening steel 18NiCrMo5 UNI 5331
must be case hardened 50-55 HRC

锁紧盘 / Shrink disc

LOP



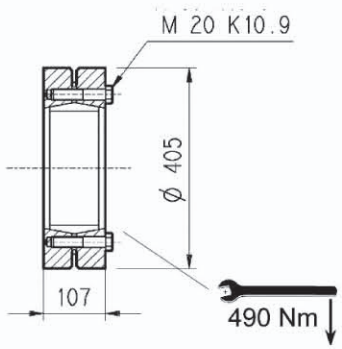

GTN14 L - GTN14 R

输入轴 / Input shaft

S_ _

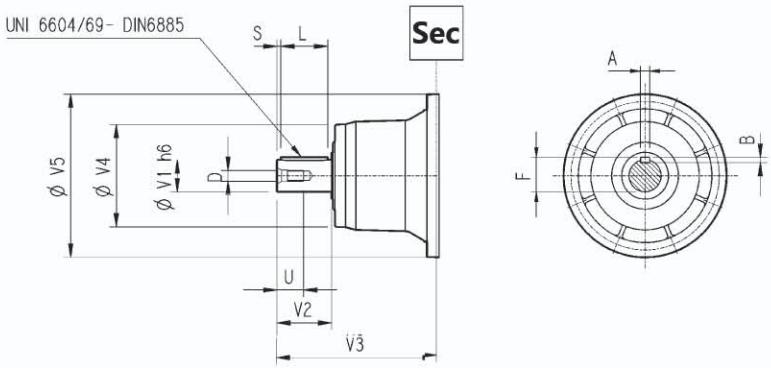

SV_ _

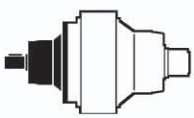

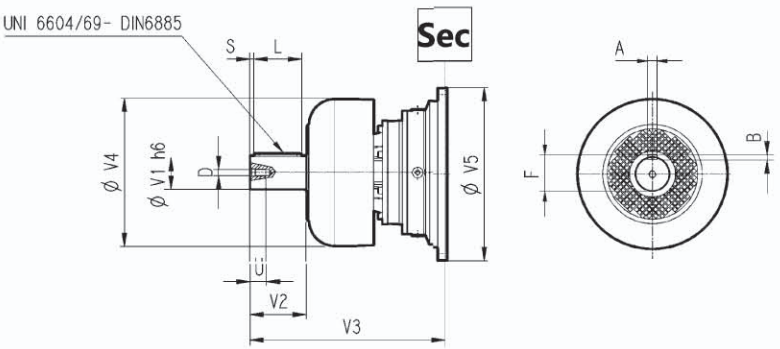

	CODE	V1	V2	V3	V4	V5	A	B	F	L	S	D	U
GTN14 L2	S10B	80	130	377	200	400	22	14	85	110	10	M16	36
	SV10B	80	130	457	347.5	400	22	14	85	110	10	M16	36
GTN14 L3	S06B	60	105	307	155	292	18	11	64	90	7.5	M16	36
	SV06B	60	105	357	309	292	18	11	64	90	7.5	M16	36
GTN14 L4	S05B	48	82	239	155	245	14	9	51.5	70	6	M16	36
	SV05B	48	82	276	219.5	244	14	9	51.5	70	6	M16	36
GTN14 R3 (B) (C)	S06B	60	105	307	155	292	18	11	64	90	7.5	M16	36
	SV06B	60	105	357	309	292	18	11	64	90	7.5	M16	36
GTN14 R4	S01A	24	36	137.5	120	186	8	7	27	30	3	M8	19
	S01B	38	58	158	120	186	10	8	41	50	4	M12	28

不带电机的输入法兰尺寸

Input dimension without motor adaptor

S_ _

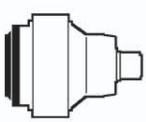

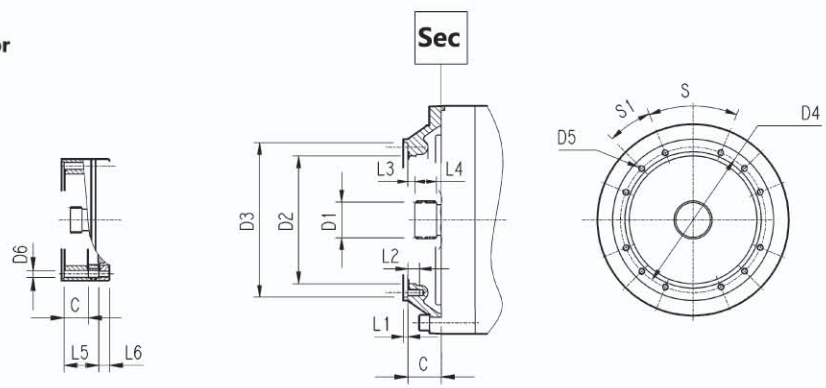

	CODE	C	D1	D2	D3	D4	D5	D6	L1	L2	L3	L4	L5	L6	S	S1	输入 Input
GTN14 L1	S9AL	120	100x94 DIN 5482	295	336 H7	370	M16 n°15	/	8	21	13	55	/	/	24°	24°	L
GTN14 L2	SAC	88	70x64 DIN 5482	200	282 H7	266	M12 n°12	/	4	22	11	32	/	/	45°	45°	C
GTN14 L3	S9AB	45	58x53 DIN 5482	195	236 H7	222	M10 n°12	/	4	18	11	22	/	/	45°	22.5°	B
GTN14 L4	S9AA	37	40x36 DIN 5482	140	178 H7	165	M10 n°8	/	4	18	9	18	/	/	45°	45°	A
GTN14 R3 (B)(C)	S9AB	45	58x53 DIN 5482	195	236 H7	222	M10 n°12	/	4	18	11	22	/	/	45°	22.5°	B
GTN14 R4	S9AA	37	40x36 DIN 5482	140	178 H7	165	M10 n°8	11	4	/	9	18	37	18	45°	45°	A

GTN14 L - GTN14 R

输出轴上允许的径向和轴向载荷
$Fh_2 : n_2 . h = 10000$

Permissible radial and axial loadson output shaft with Fh_2
$n_2 \cdot h = 10000$

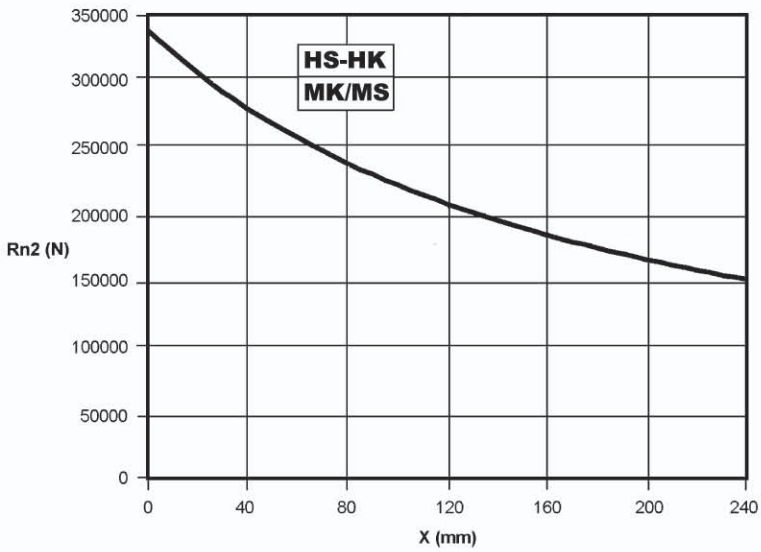

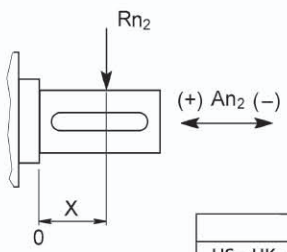

	An2 (+)	An2 (-)
HS - HK - MK - MS	280000	210000

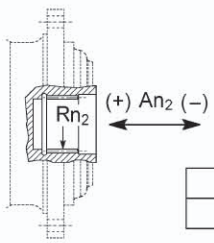

	Rn2	An2 (+/-)
LSH	90000	90000

轴上的载荷修正系数 fh_2 Load corrective factor fh_2 on shafts	$Fh_2 = n_2 \cdot h$		10000	25000	50000	100000	500000	1000000
	fh_2	LSH	1	0.74	0.58	0.46	0.27	0.21
		HS - HK - MK - MS	1	0.76	0.61	0.50	0.31	0.25

输入轴上允许的径向和轴向载荷
$Fh_1 n_1 . h = 250000$

Permissible radial loads on inputshaft with $Fh_1 : n_1 \cdot h = 250000$

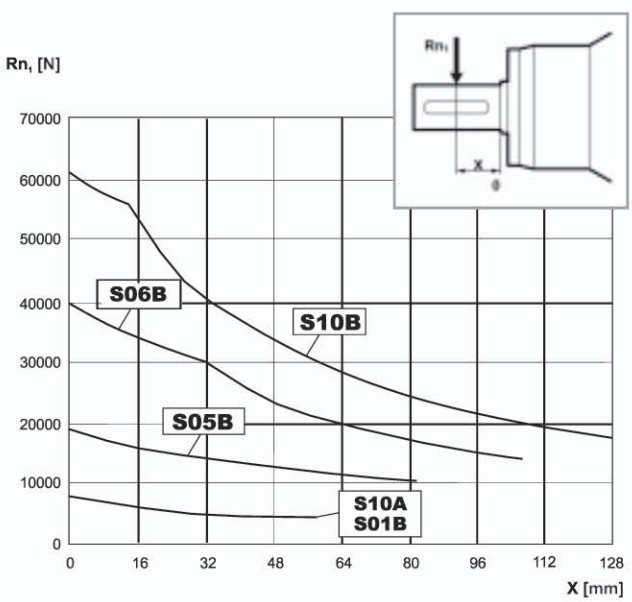

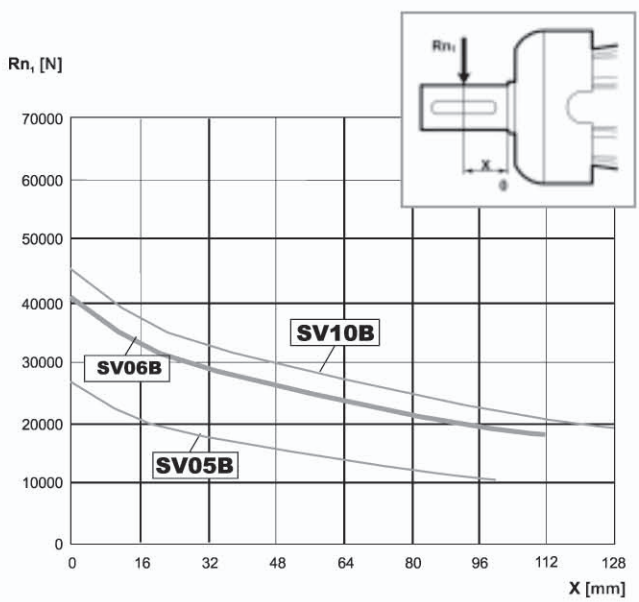

轴上的载荷修正系数 fh_1 Load corrective factor fh_1 on shafts	$Fh_1 = n_1 \cdot h$	250000	500000	1000000	2000000	5000000	10000000
	fh_1	1	0.79	0.63	0.50	0.37	0.29

GTN15 L

HS

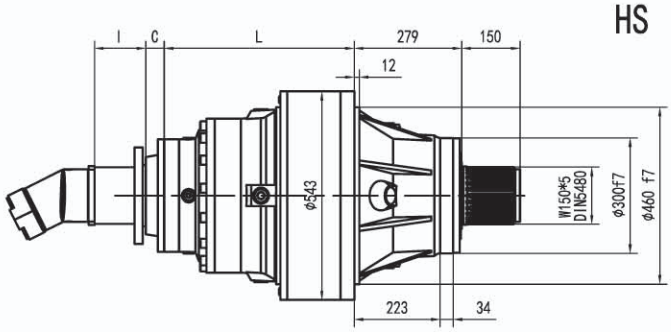

HK



LSH

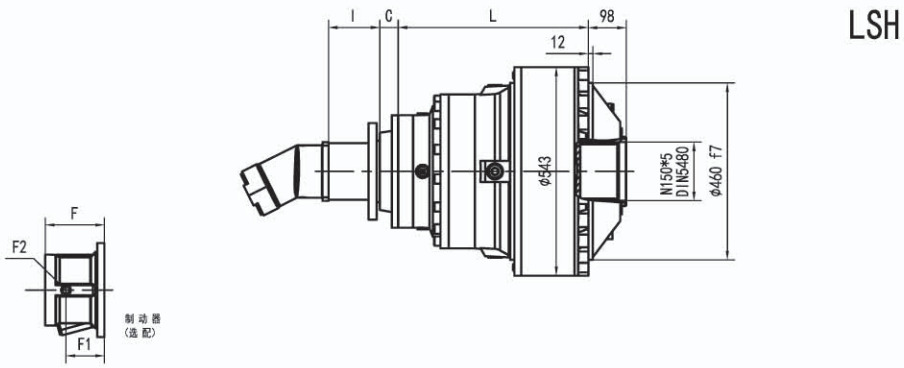

LP

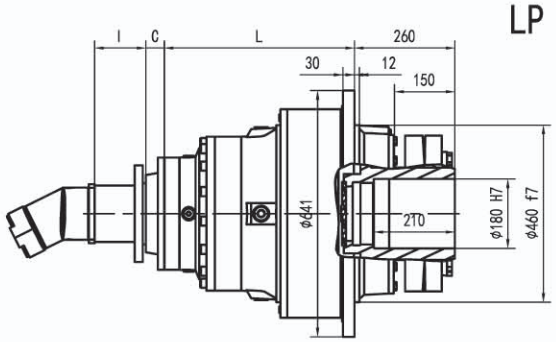

GTN15 L

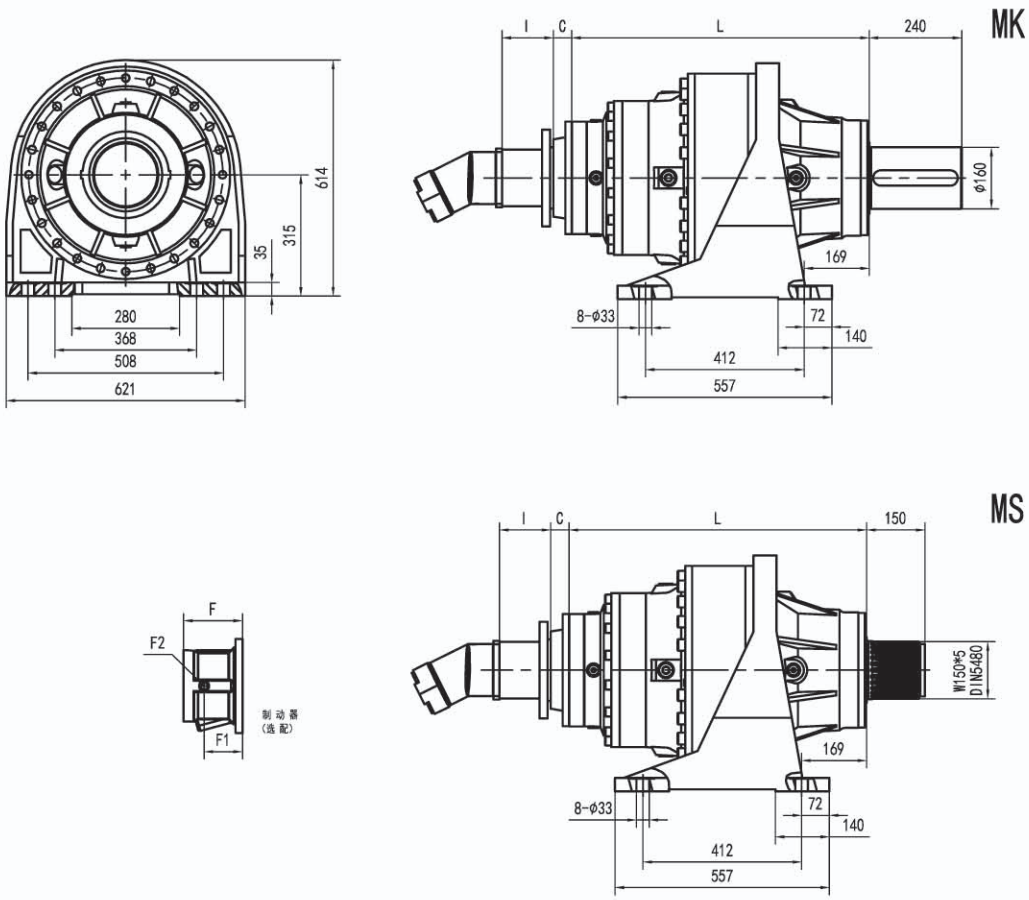

LP输出 LP VERSION	最大输出扭矩 MAX. TRANSMISSIBLE TORQUE	126000 Nm

	L				Kg												
	HS HK	MK MS	LSH	LP	HS HK	MK MS	LSH	LP	C	输入 Input	I	F	F1	F2	类型 Type	输入 Input	Kg
GTN15 L1	174	453	174	174	370	500	280	330	116	E	联系厂家						
GTN15 L2	386	665	386	386	455	585	365	415	81	D		230	185	1/4 G	6	B	35
GTN15 L3	519	798	519	519	500	630	410	460	51	B		201	153	1/4 G	6	B	28
GTN15 L4	608	887	608	608	512	642	422	472	37	A		145	95	1/4 G	5	A	16

GTN15 L

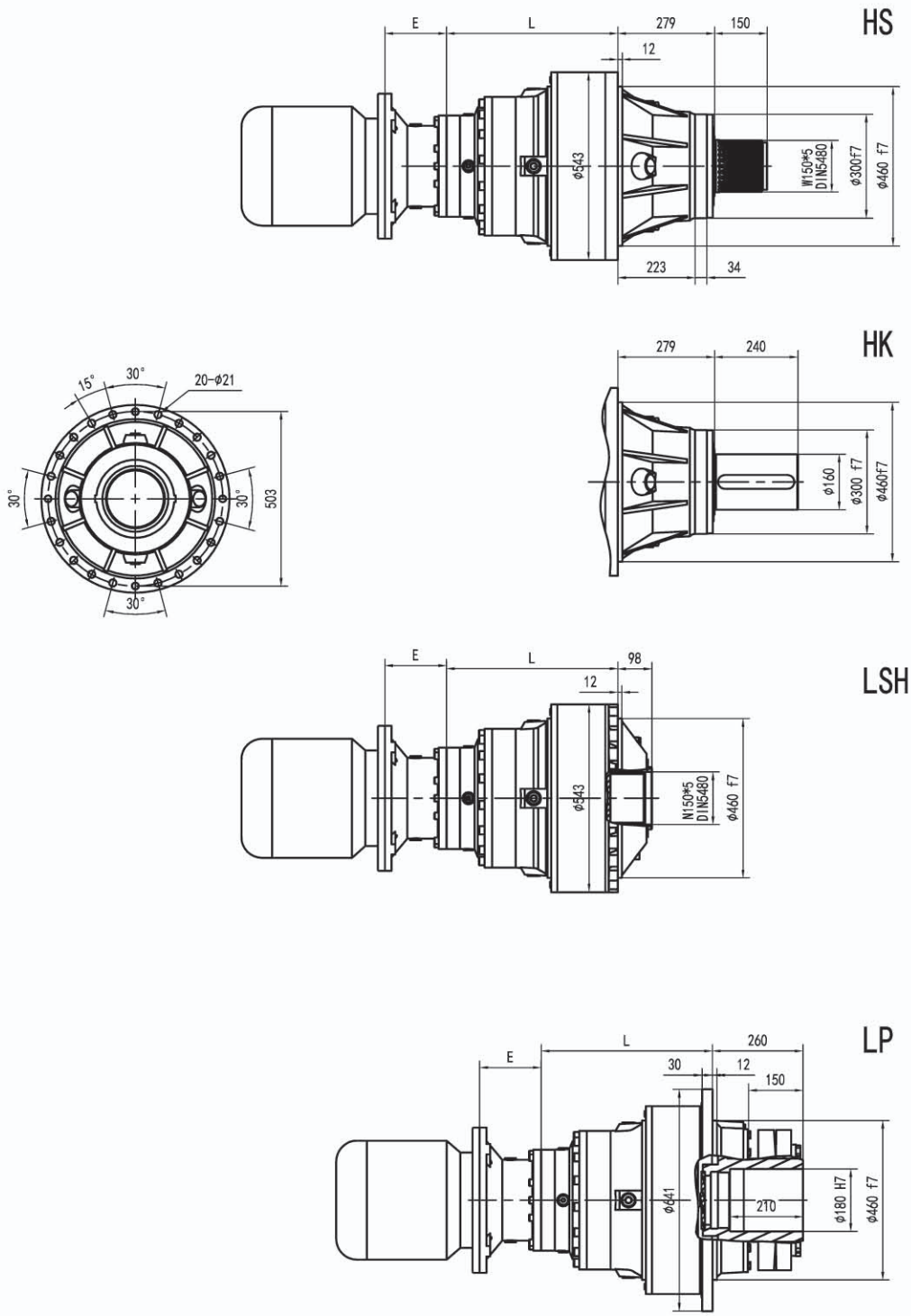
HS
E
L
279
150
12
φ543
W150*5
DIN5480
φ300F7
φ460 f7
223
34
HK
279
240
φ160
φ300 f7
φ460F7
15°
30°
20-φ21
30°
30°
30°
503
LSH
E
L
98
12
φ543
N150*5
DIN5480
φ460 f7
LP
E
L
260
30
12
150
φ641
270
φ180 H7
φ460 f7

GTN15 L

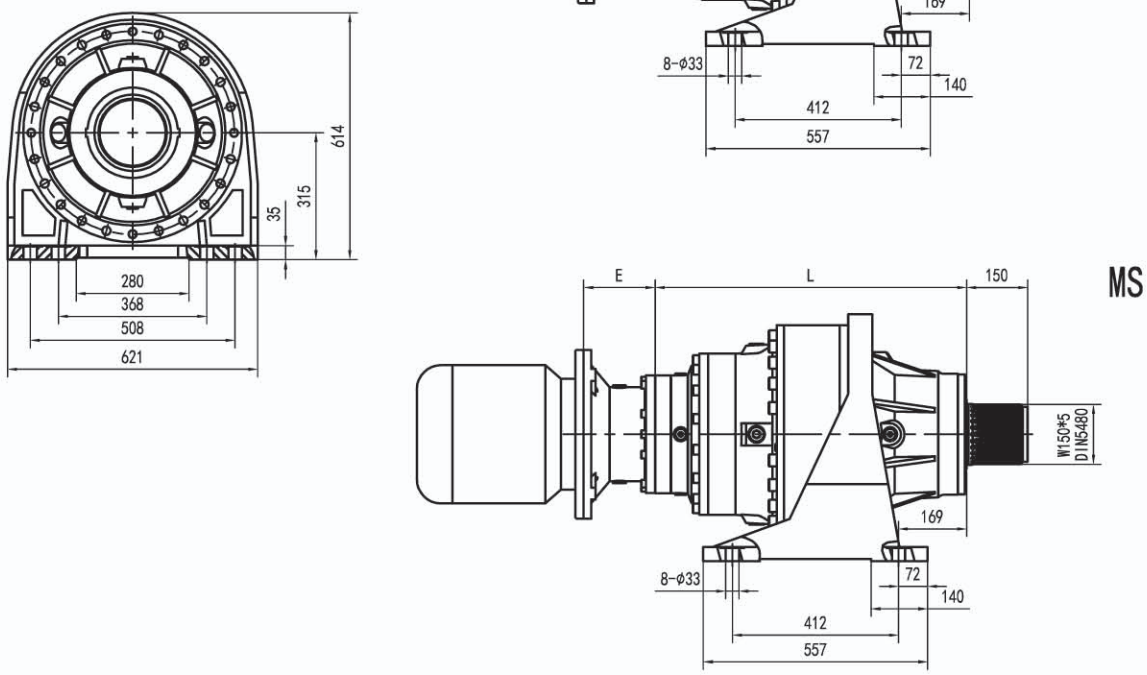

LP输出 LP VERSION	最大输出扭矩 MAX. TRANSMISSIBLE TORQUE	126000 Nm

	L				Kg				E					
	HS HK	MK MS	LSH	LP	HS HK	MK MS	LSH	LP	IEC 132	IEC 160	IEC 180	IEC 200	IEC 225	IEC 250
GTN15 L1	174	453	174	174	370	500	280	330						
GTN15 L2	386	665	386	386	455	585	365	415						
GTN15 L3	519	798	519	519	500	630	410	460			195	186	216	215
GTN15 L4	608	887	608	608	512	642	422	472	114	144	114	174		

GTN15 L

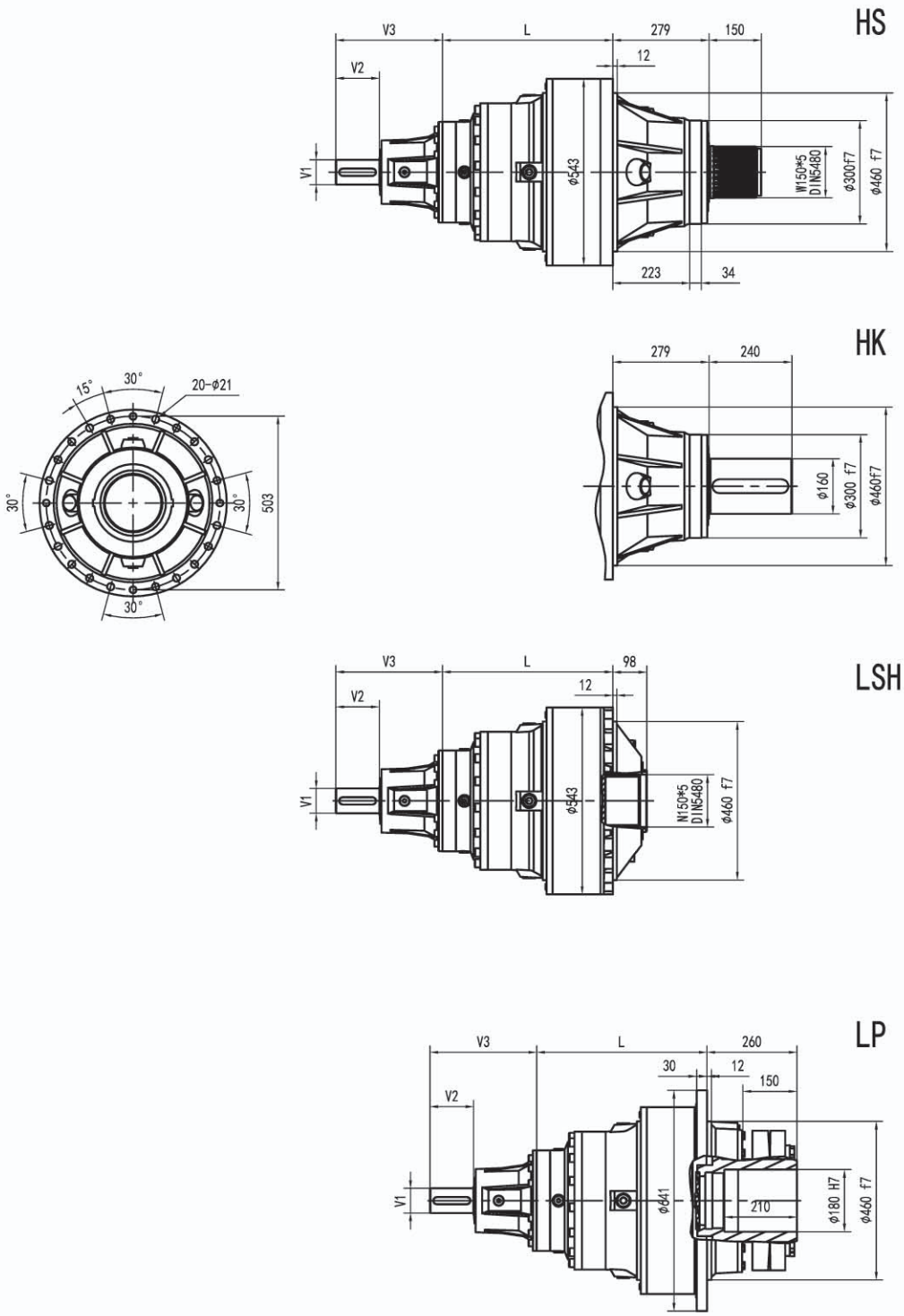
HS
V3
L
279
150
12
V2
V1
φ543
W150*5
DIN5480
φ300f7
φ460 f7
223
34
HK
279
240
φ160
φ300 f7
φ460f7
15°
30°
20-φ21
30°
30°
503
30°
LSH
V3
L
98
12
V2
V1
φ543
N150*5
DIN5480
φ460 f7
LP
V3
L
260
30
12
150
V2
V1
φ641
210
φ180 H7
φ460 f7

GTN15 L

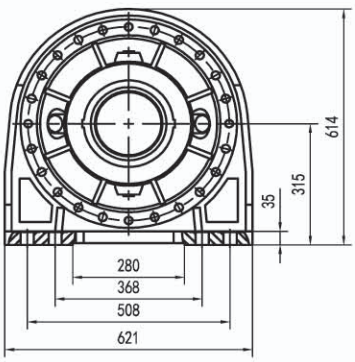

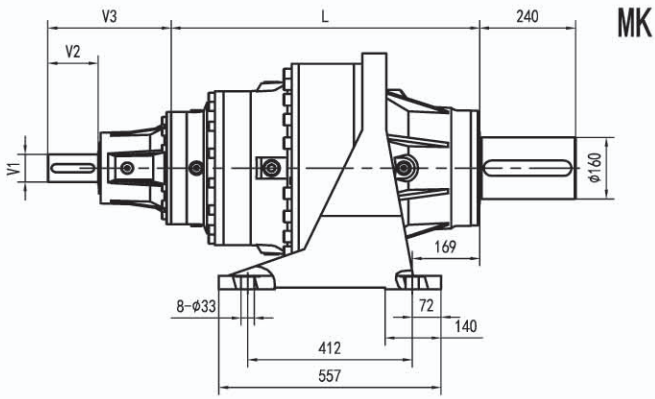

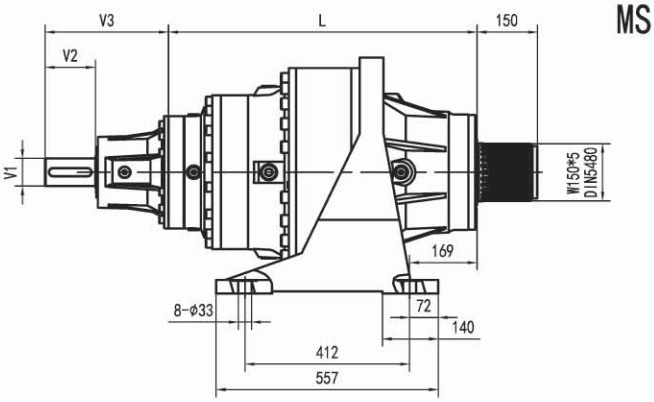

LP输出 LP VERSION	最大输出扭矩 MAX. TRANSMISSIBLE TORQUE	126000 Nm

	L				Kg				V1	V2	V3	Kg	V1	V2	V3	Kg
	HS HK	MK MS	LSH	LP	HS HK	MK MS	LSH	LP								
GTN15 L1	174	453	174	174	370	500	280	330								
GTN15 L2	386	665	386	386	455	585	365	415	80	130	348	35				
GTN15 L3	519	798	519	519	500	630	410	460	80	130	315	35	60	105	313	28
GTN15 L4	608	887	608	608	512	642	422	472	48	82	239	15				

GTN15 R

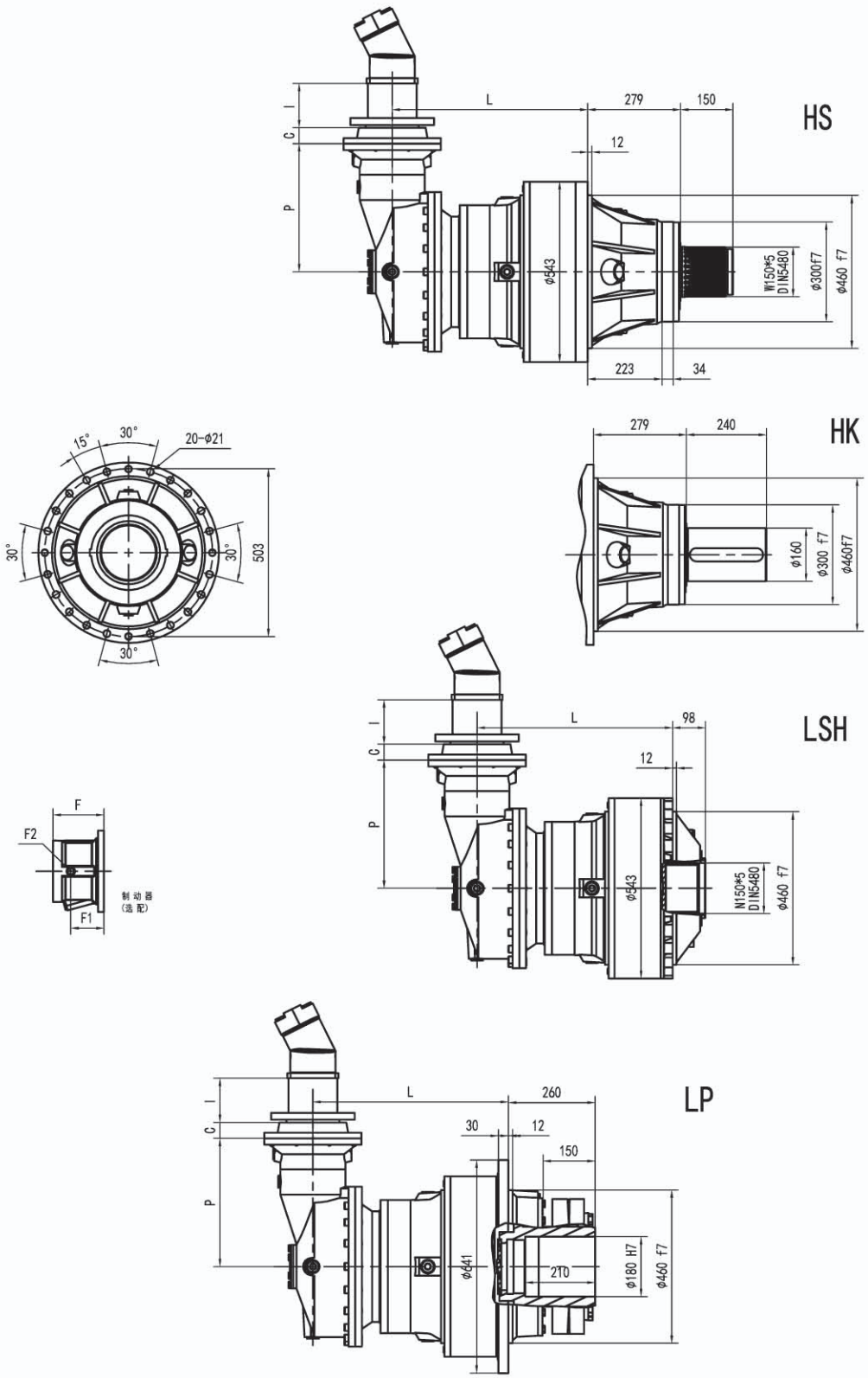
HS
L
279
150
12
I
C
P
φ543
W150*5
DIN5480
φ300f7
φ460 f7
223
34
HK
279
240
φ160
φ300 f7
φ460f7
15°
30°
20-φ21
30°
30°
503
30°
LSH
L
98
12
I
C
P
φ543
N150*5
DIN5480
φ460 f7
F
F2
F1
制动器
(选配)
LP
L
260
30
12
150
I
C
P
φ641
210
φ180 H7
φ460 f7

GTN15 R

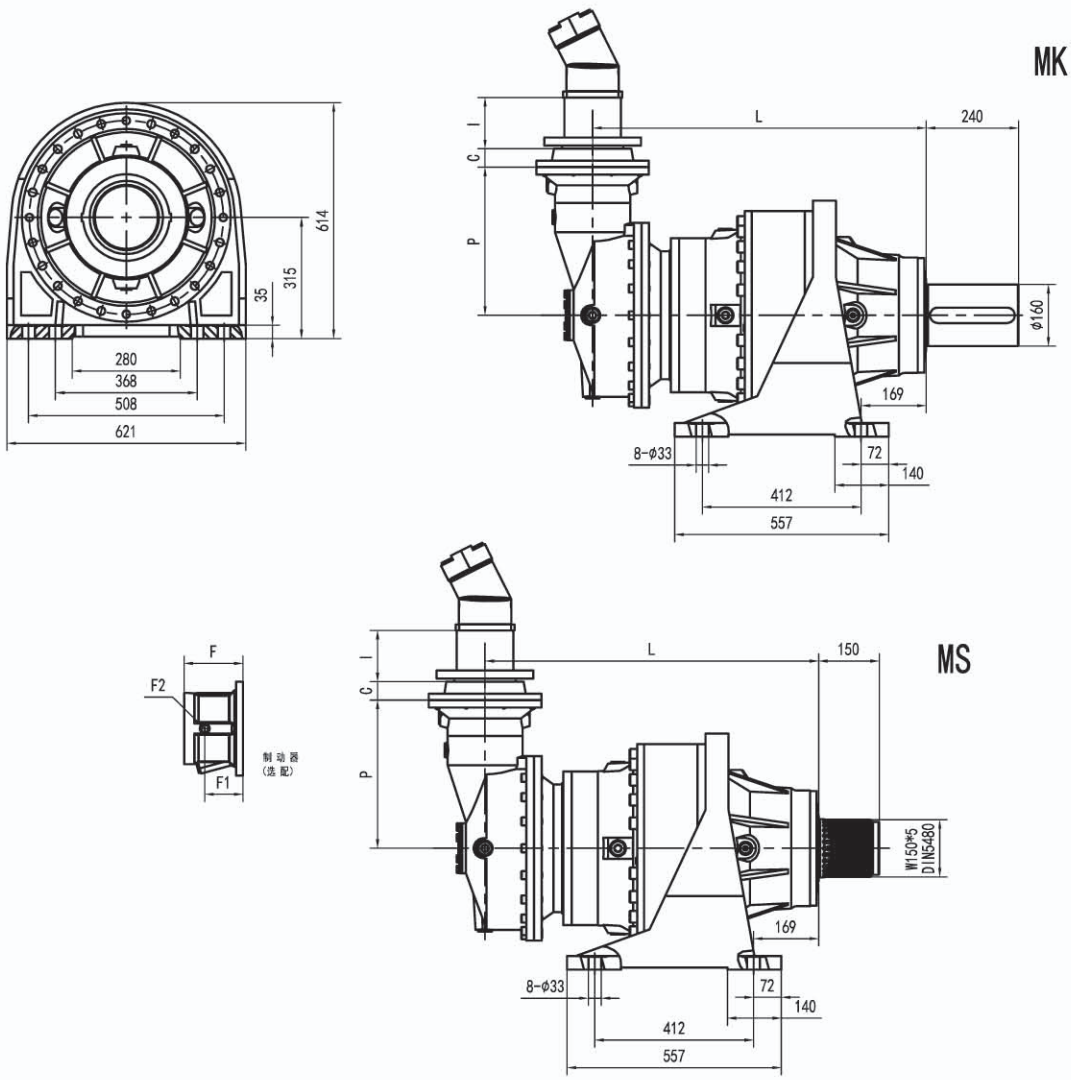

LP输出 LP VERSION	最大输出扭矩 MAX. TRANSMISSIBLE TORQUE	126000 Nm

	L				P	Kg				C	输入 Input	I	F	F1	F2	类型 Type	输入 Input	Kg
	HS HK	MK MS	LSH	LP		HS HK	MK MS	LSH	LP									
GTN15 R3(B)	611	890	611	611	345	590	720	500	550	45	B	联系厂家	195	147	1/4 G	6	B	28
GTN15 R3(C)	611	890	611	611	390	600	730	501	560	45	B		195	147	1/4 G	6	B	28
GTN15 R4	638	917	638	638	225	550	680	460	510	37	A		145	95	1/4 G	5	A	16

GTN15 R

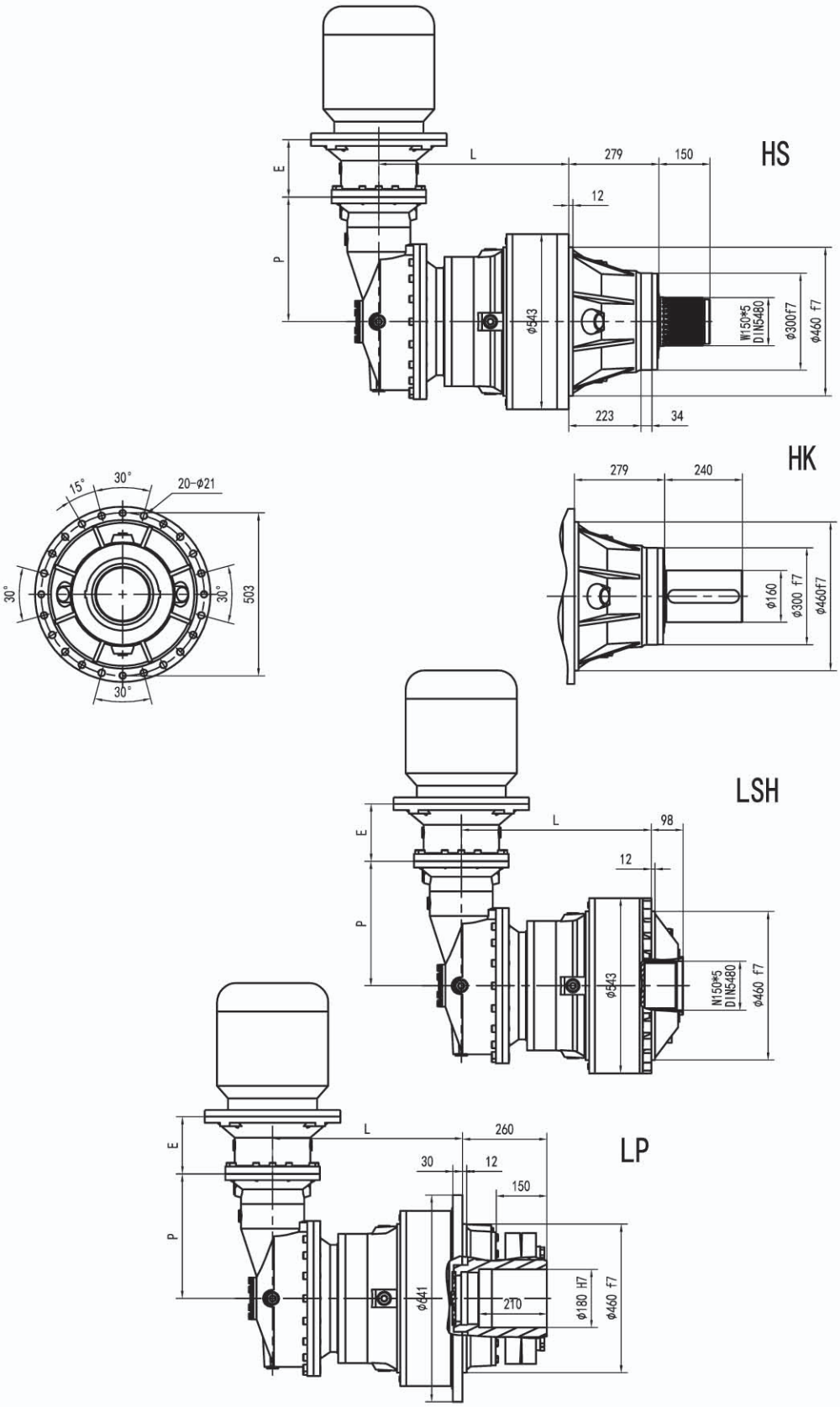
HS
L
279
150
12
E
P
ø343
W150*5
DIN5480
ø300f7
ø460 f7
223
34
HK
279
240
ø160
ø300 f7
ø460f7
15°
30°
20-ø21
30°
30°
30°
503
LSH
L
98
12
E
P
ø343
N150*5
DIN5480
ø460 f7
LP
L
260
30
12
150
E
P
ø241
2T0
ø180 H7
ø460 f7

GTN15 R

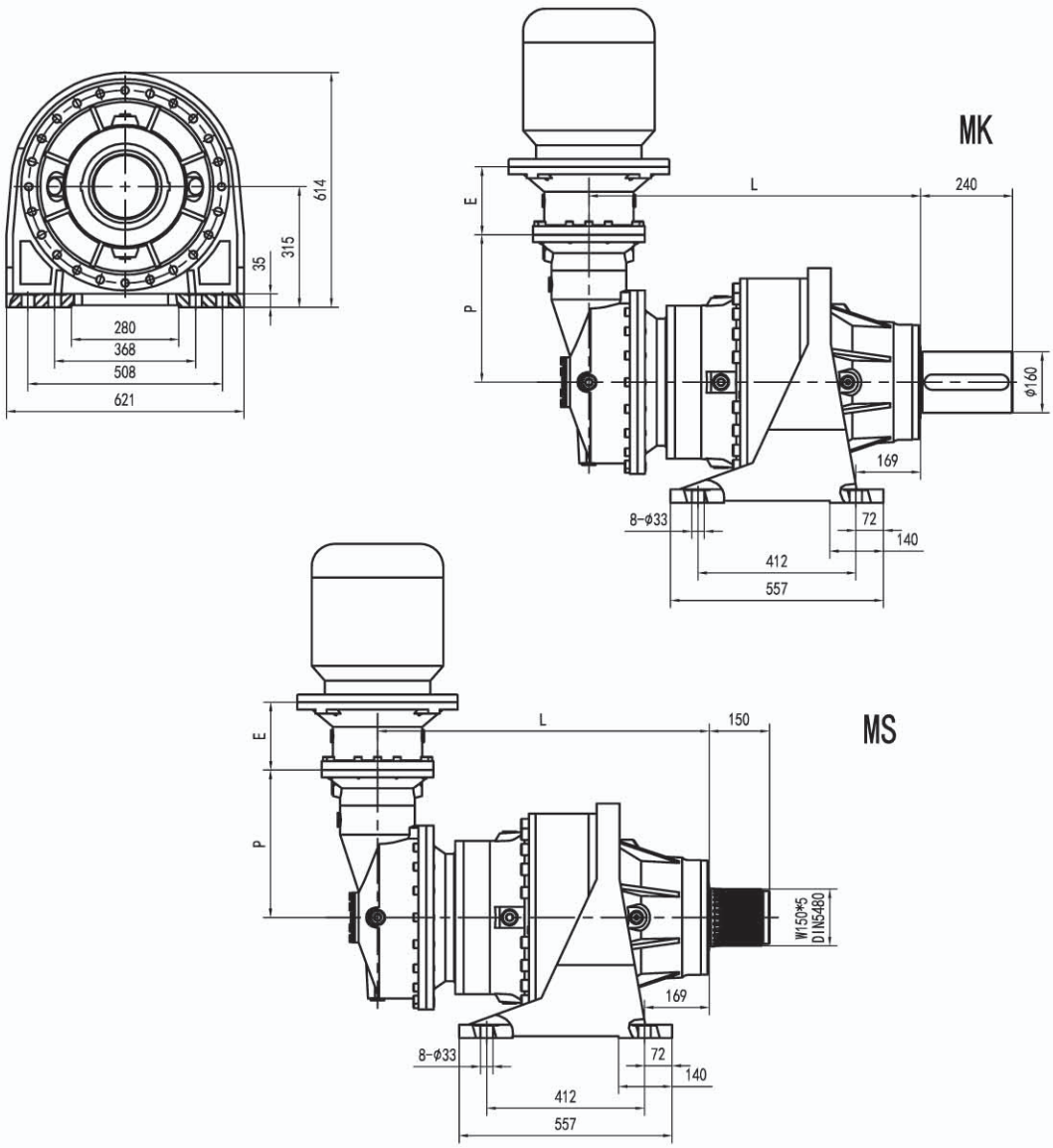

LP输出 LP VERSION	最大输出扭矩 MAX. TRANSMISSIBLE TORQUE	126000 Nm

	L				P	Kg				E					
	HS HK	MK MS	LSH	LP		HS HK	MK MS	LSH	LP	IEC 132	IEC 160	IEC 180	IEC 200	IEC 225	IEC 250
GTN15 R3(B)	611	890	611	611	345	590	720	500	550			152	182	212	193
GTN15 R3(C)	611	890	611	611	390	600	730	501	560			152	182	212	193
GTN15 R4	638	917	638	638	225	550	680	460	510	114	144	144	174		

GTN15 R

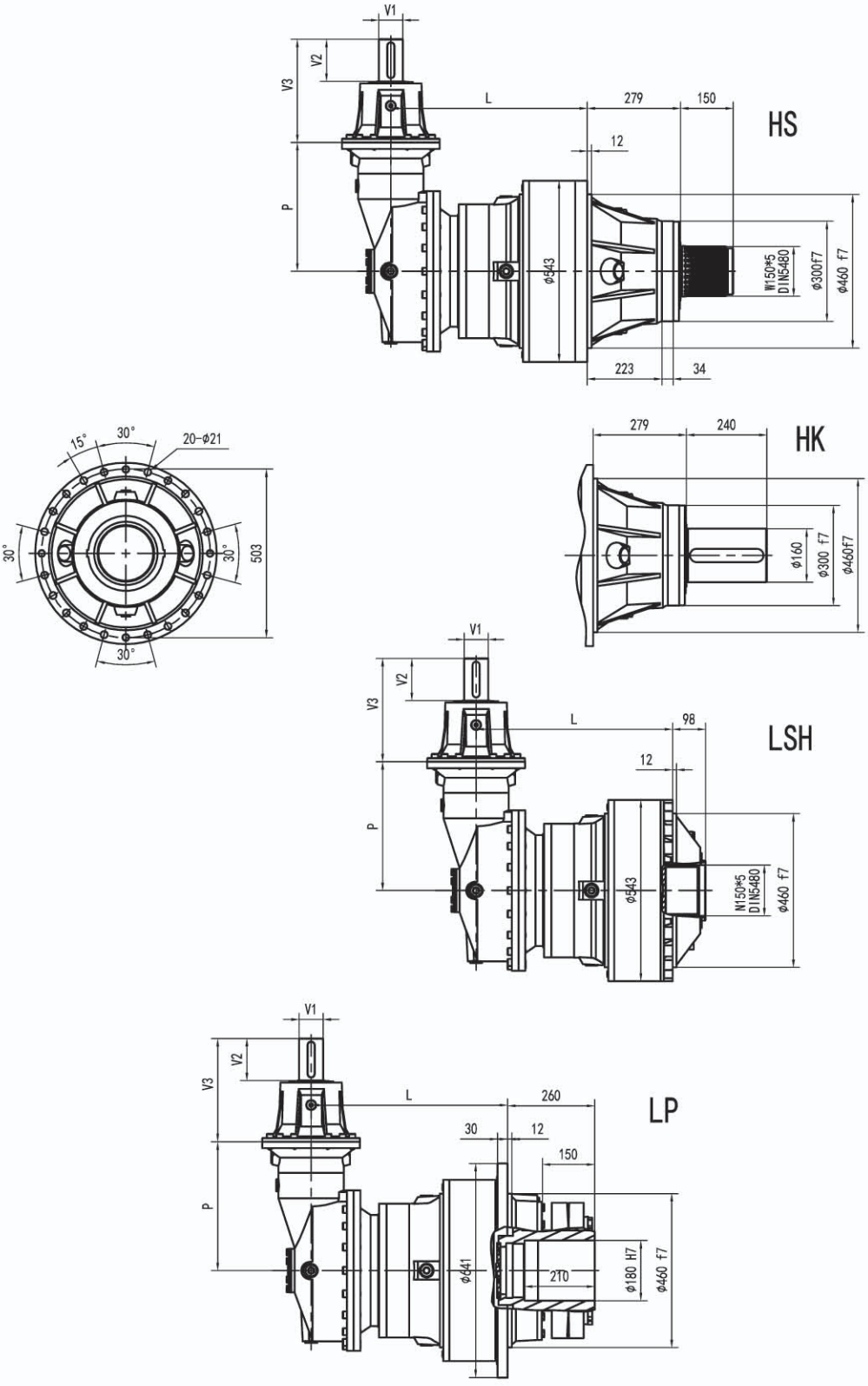
HS
V1
V2
V3
L
279
150
12
P
φ543
W150*5
DIN5480
φ300f7
φ460 f7
223
34
15°
30°
20-φ21
503
HK
279
240
φ160
φ300 f7
φ460f7
LSH
98
N150*5
DIN5480
LP
260
30
φ641
210
φ180 H7

GTN15 R

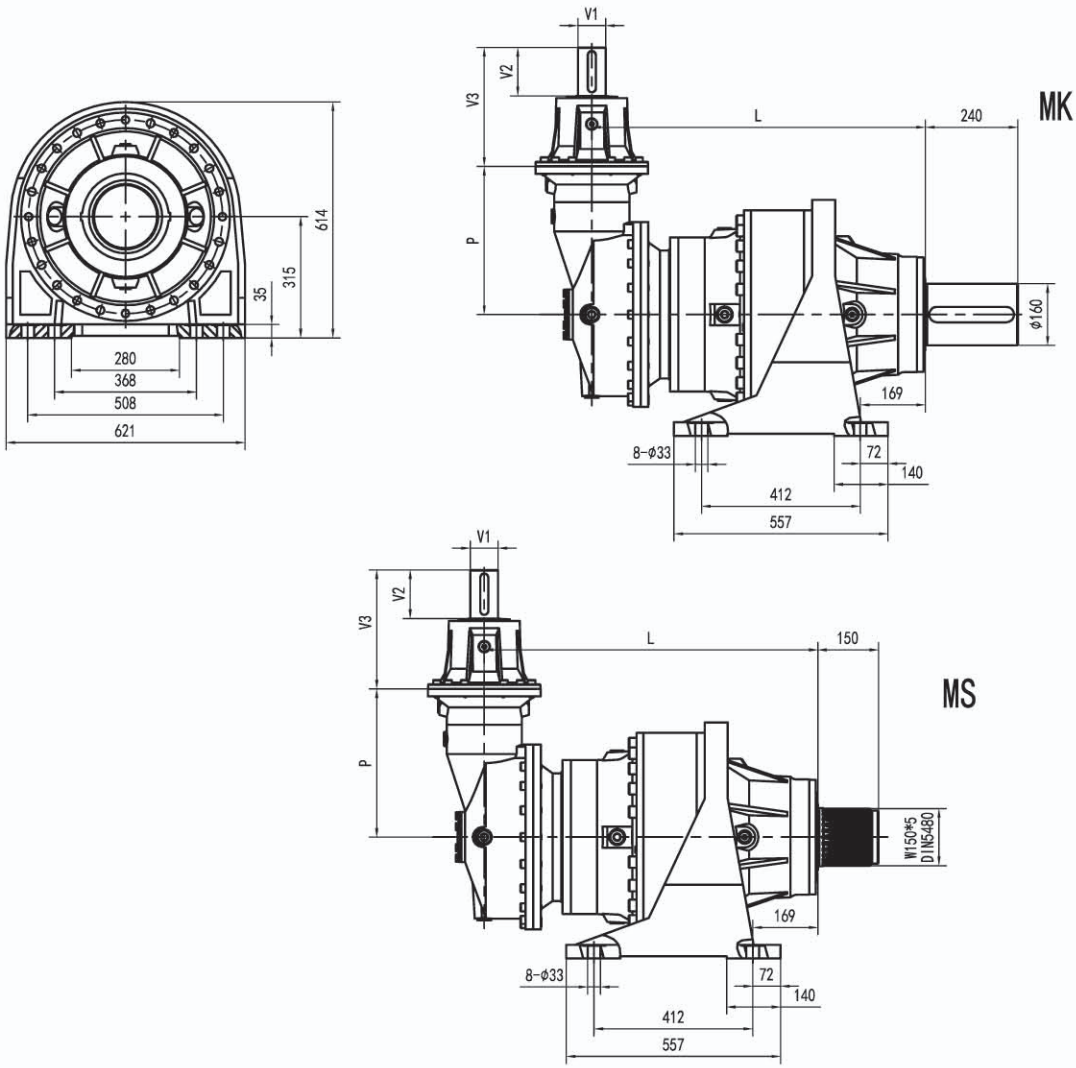

LP输出 LP VERSION	最大输出扭矩 MAX. TRANSMISSIBLE TORQUE	126000 Nm

	L				P	Kg				V1	V2	V3	Kg	V1	V2	V3	Kg
	HS HK	MK MS	LSH	LP		HS HK	MK MS	LSH	LP								
GTN15 R3(B)	611	890	611	611	345	590	720	500	550	60	105	307	23				
GTN15 R3(C)	611	890	611	611	390	600	730	501	560	60	105	307	23				
GTN15 R4	638	917	638	638	225	550	680	460	510	48	82	239	15				

GTN15 L - GTN15 R

HK

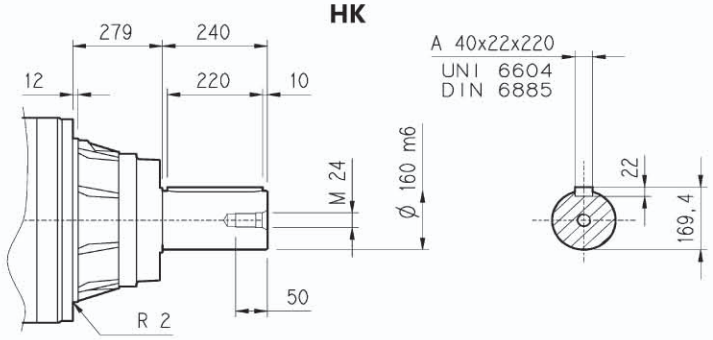

MK

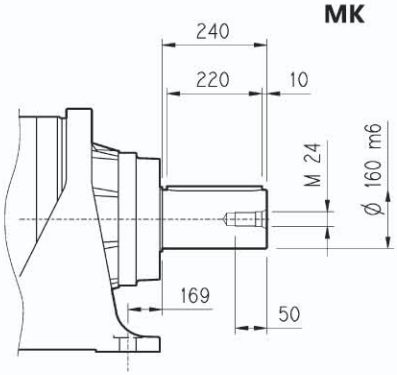

HS

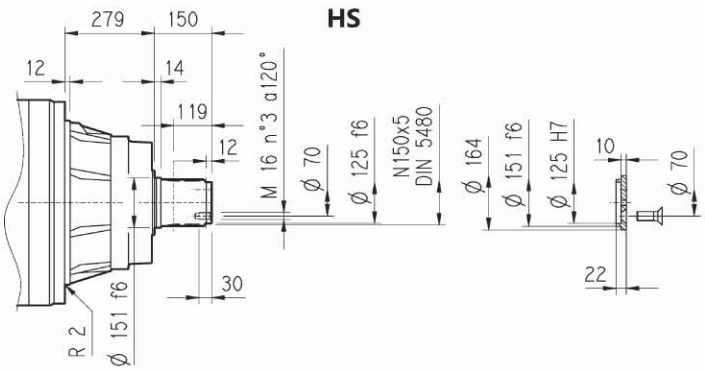

MS

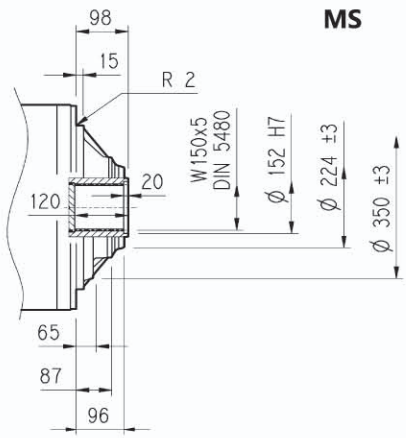

LP

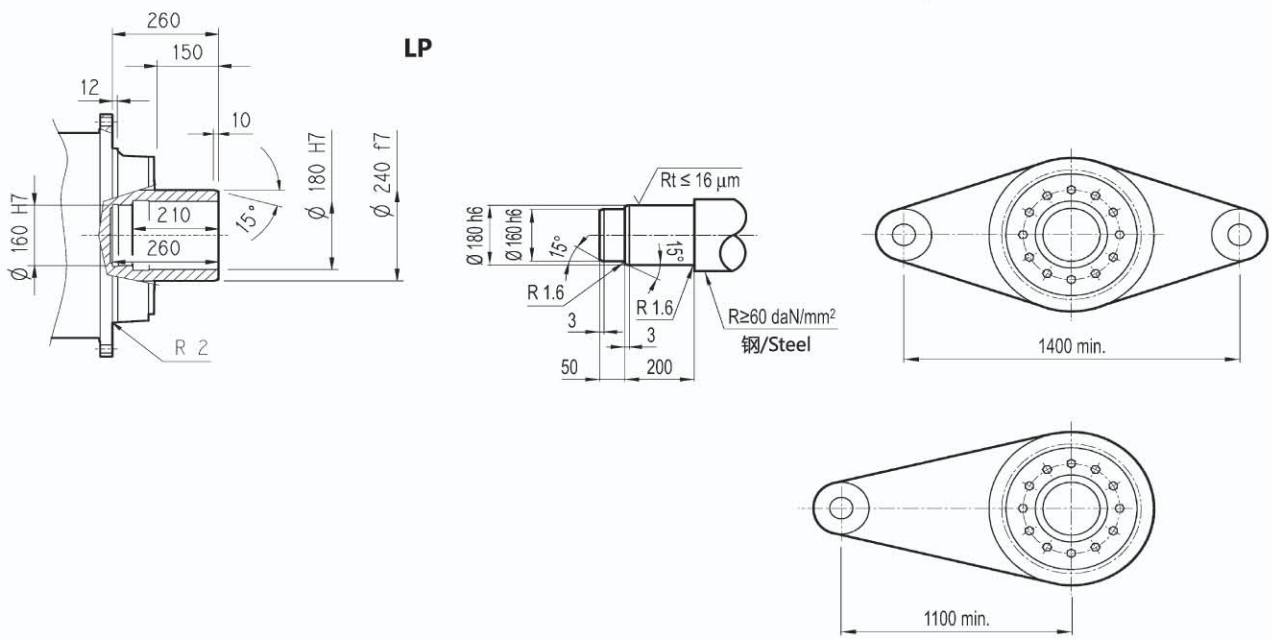

LP输出 LP VERSION	最大输出扭矩 MAX. TRANSMISSIBLE TORQUE	126000 Nm

GTN15 L - GTN15 R

法兰 / Flange

FOA



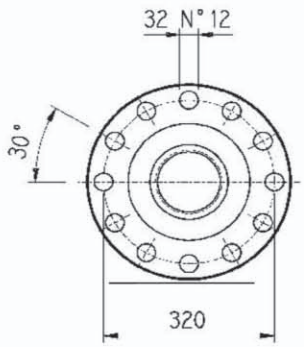

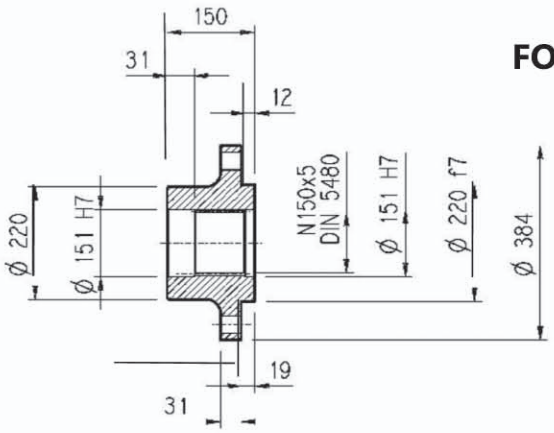

材料 : 钢 C40
Material : Steel C40

输出齿轮 / Output pinions

PM...



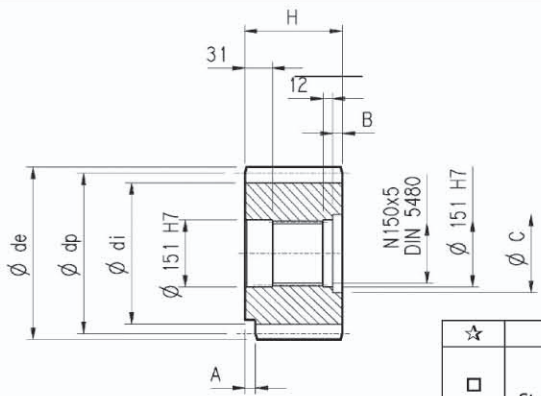

	m	z	x	dp	di	de	H	A	B	C	☆
PM1801	18	16	0.500	288	261	342	160	0	10	166	■
PM1802	18	16	0.617	288	271	339	150	30	0	0	□

☆	材料 / Material
□	39NiCrMo3 调制钢 Steel 39NiCrMo3 hardened and tempered
■	18NiCrMo5 表面渗碳钢 18NiCrMo5 Case hardened

套筒联轴器 / Sleeve couplings

HOS



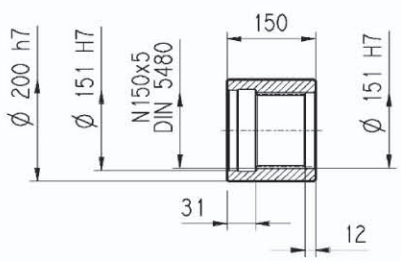

材料 : 钢 16CrNi4
Material : Steel 16CrNi4

花键棒料 / Splined bars

SOF



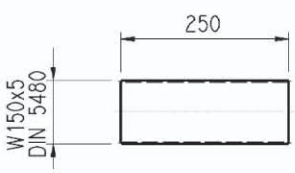

表面硬化钢18NiCrMo5 NUI5331,表面必须硬化50-55HRC
Case hardening steel 18NiCrMo5 UNI 5331 must be case hardened 50-55 HRC

锁紧盘 / Shrink disc

LOP



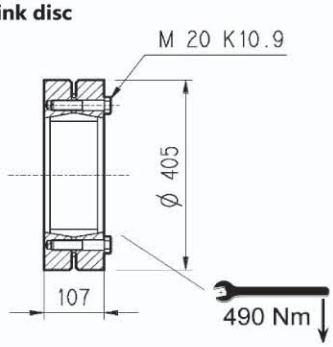

GTN15 L - GTN15 R

输入轴 / Input shaft

S_ _

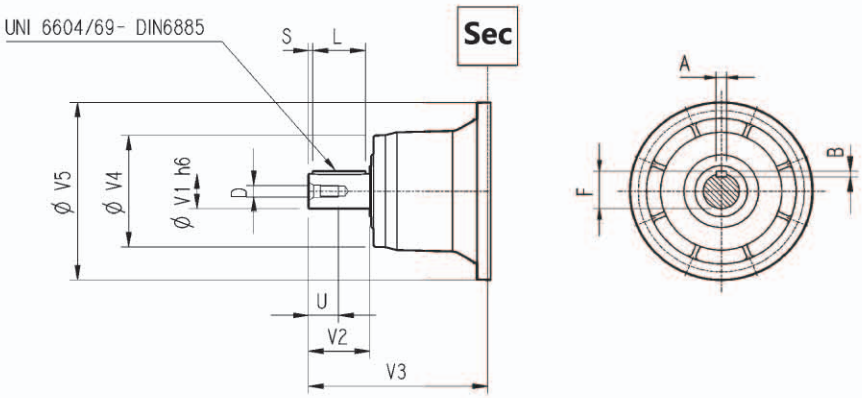

SV_ _

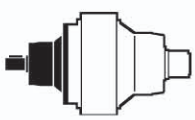

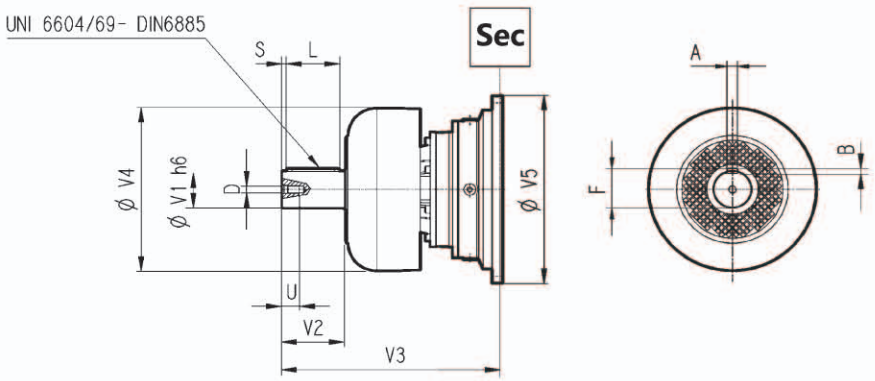

	CODE	V1	V2	V3	V4	V5	A	B	F	L	S	D	U
GTN15 L2	S11B	80	130	348	200	428	22	14	85	110	10	M16	36
	SV11B	80	130	456	347.5	428	22	14	85	110	10	M16	36
GTN15 L3	S07B	80	130	315	200	345	22	14	85	110	10	M16	36
	SV07B	80	130	375	347.5	348	22	14	85	110	10	M16	36
	S07A	60	105	313	155	345	18	11	64	90	7.5	M16	36
	SV07A	60	105	363	309	348	18	11	64	90	7.5	M16	36
GTN15 L4	S05B	48	82	239	155	245	14	9	51.5	70	6	M16	36
	SV05B	48	82	276	219.5	244	14	9	51.5	70	6	M16	36
GTN15 R4	S05B	48	82	239	155	245	14	9	51.5	70	6	M16	36
	SV05B	48	82	276	219.5	244	14	9	51.5	70	6	M16	36
GTN15 R3 (B) (C)	S06B	60	105	307	155	292	18	11	64	90	7.5	M16	36

无电机适配器的输入尺寸
Input dimension without motor adaptor

S_ _

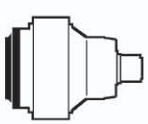

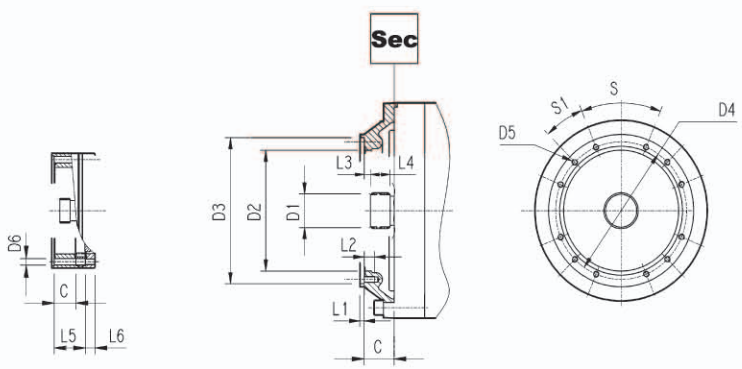

	CODE	C	D1	D2	D3	D4	D5	D6	L1	L2	L3	L4	L5	L6	S	S1	输入 Input
GTN15 L1	S9AE	116	100x94 DIN 5482	340	412 H7	390	M16 n°18	/	7	30	8	55	/	/	20°	20°	E
GTN15 L2	S9AD	81	80x74 DIN 5482	270	335 H7	314	M16 n°8	/	5	30	8.5	40	/	/	60°	30°	D
GTN15 L3	S9AB	51	58x53 DIN 5482	195	236 H7	222	M10 n°12	/	4	18	11	22	/	/	45°	22.5°	B
GTN15 L4	S9AA	37	40x36 DIN 5482	140	178 H7	165	M10 n°8	/	4	18	9	18	/	/	45°	45°	A
GTN15 R4	S9AA	37	40x36 DIN 5482	140	178 H7	165	M10 n°8	11	4	18	9	18	/	/	45°	45°	A
GTN15 R3 (B) (C)	S9AB	45	58x53 DIN 5482	195	236 H7	222	M10 n°12	/	4	18	11	22	/	/	45°	22.5°	B

GTN15 L - GTN15 R

Fh_2输出轴允许的径向和轴向载荷
$n_2 \cdot h$ =10000

Permissible radial and axial loads on output shaft with Fh_2
$n_2 \cdot h$ =10000

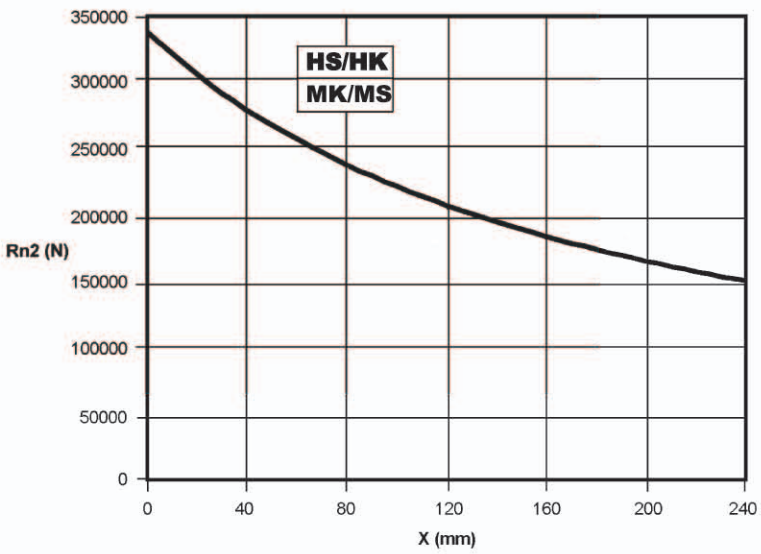

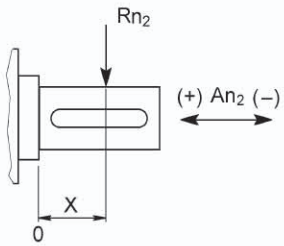

	An2 (+)	An2 (-)
HS-HK-MK-MS	280000	210000

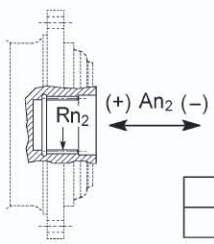

	Rn2	An2 (+/-)
LSH	90000	90000

轴上的载荷修正系数 fh_2 Load corrective factor fh_2 on shafts	$Fh_2 = n_2 \cdot h$		10000	25000	50000	100000	500000	1000000
	fh_2	LSH	1	0.74	0.58	0.46	0.27	0.21
		HS-HK-MK-MS	1	0.76	0.61	0.50	0.31	0.25

Fh_1输入轴允许的径向和轴向载荷
$n_2 \cdot h$ =250000

Permissible radial loads on inputshaft with $Fh_1 : n_1 \cdot h$
=250000

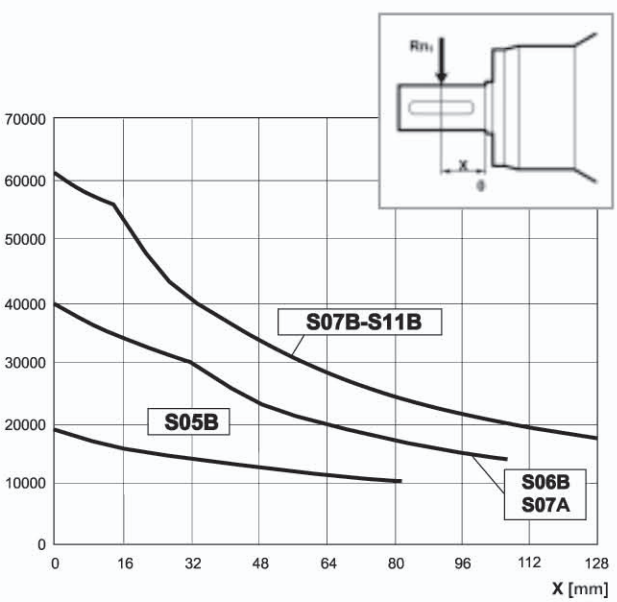

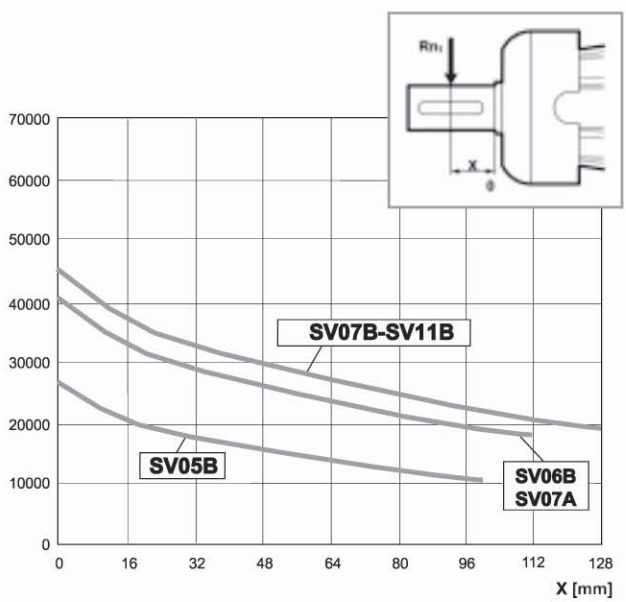

轴上的载荷修正系数fh_1 Load corrective factor fh_1 on shafts	$Fh_1 = n_1 \cdot h$	250000	500000	1000000	2000000	5000000	10000000
	fh_1	1	0.79	0.63	0.50	0.37	0.29

GTN16 L

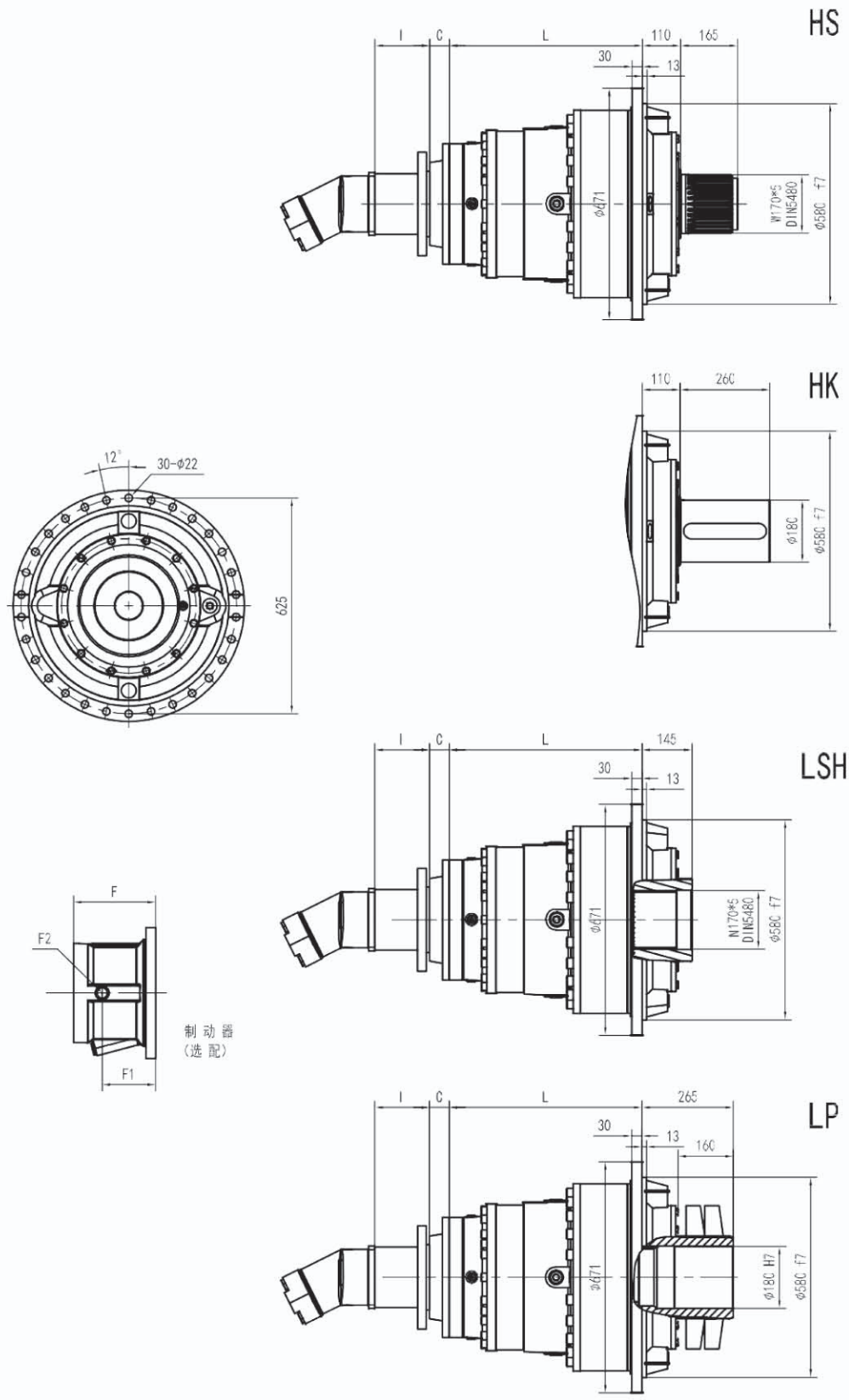
HS
I
C
L
110
165
30
13
Ø471
W170*5
DIN5480
Ø580 f7
HK
110
260
Ø180
Ø580 f7
12°
30-Ø22
625
LSH
I
C
L
145
30
13
Ø471
N170*5
DIN5480
Ø580 f7
F
F2
F1
制 动 器
(选 配)
LP
I
C
L
265
30
13
160
Ø471
Ø180 H7
Ø580 f7

GTN16 L

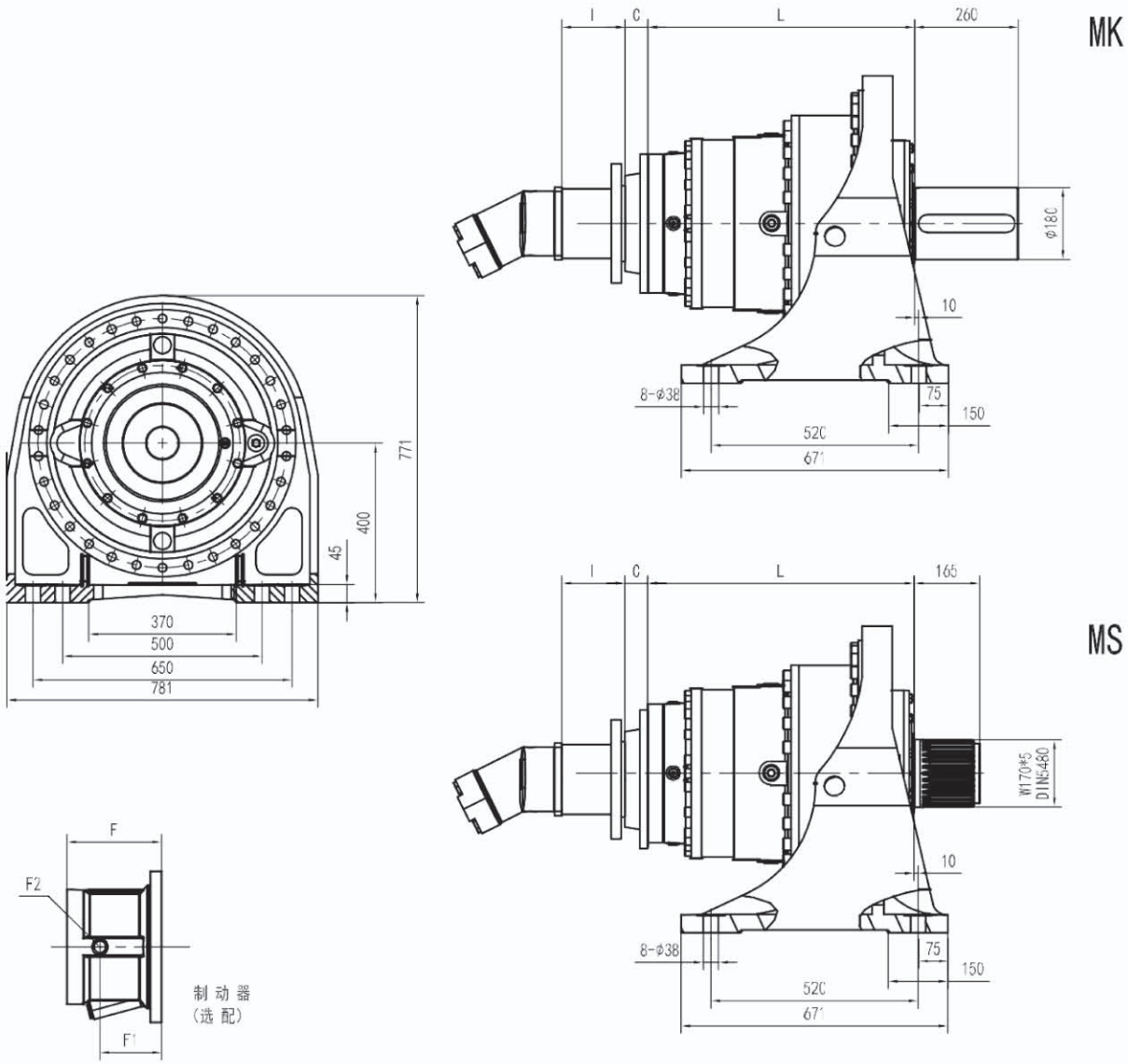

LP输出 LP VERSION	最大传动扭矩 MAX. TRANSMISSIBLE TORQUE	162000Nm

	L				Kg				C	输入 Input	I	F	F1	F2	类型 Type	输入 Input	Kg
	HS HK	MK MS	LSH	LP	HS HK	MK MS	LSH	LP									
GTN16 L1	179	289	179	179	500	700	430	450	156	E	联系厂家						
GTN16 L2	431	541	431	431	590	790	520	540	81	D							
GTN16 L3	564	674	564	564	640	840	570	590	51	B		201	153	1/4G	6	B	28
GTN16 L4	653	763	653	653	660	860	590	610	37	A		145	95	1/4 G	5	A	16

GTN16 L

HS

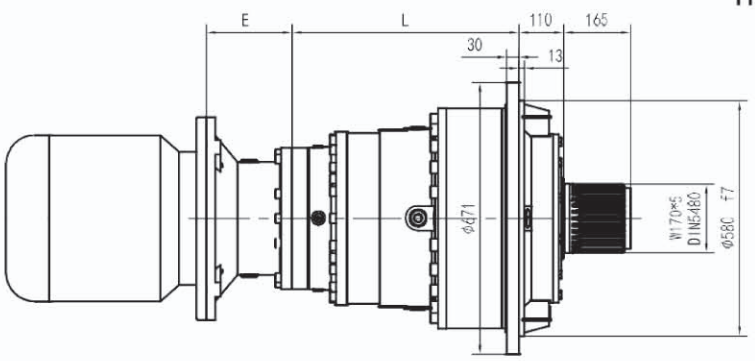

HK

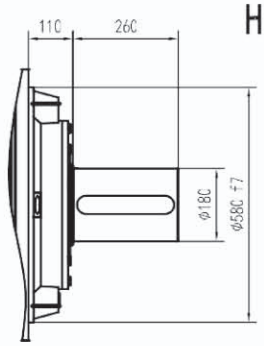

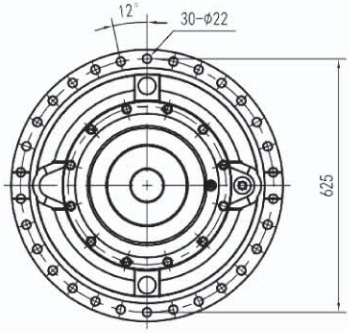

LSH

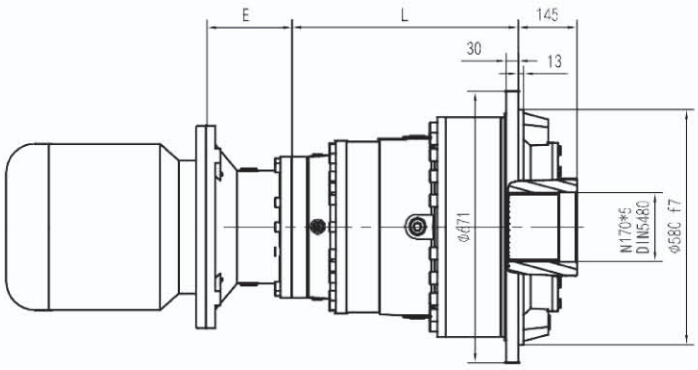

LP

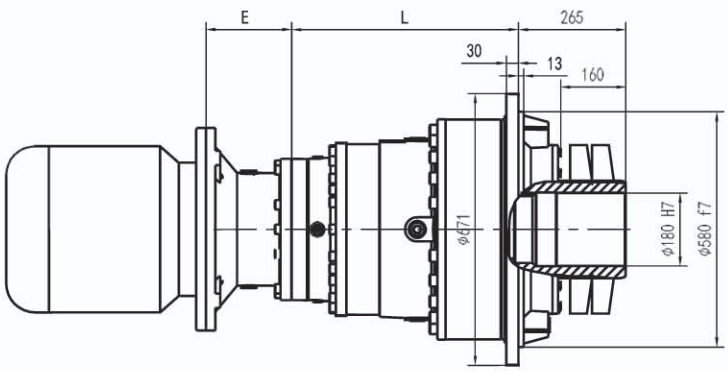

GTN16 L

MK

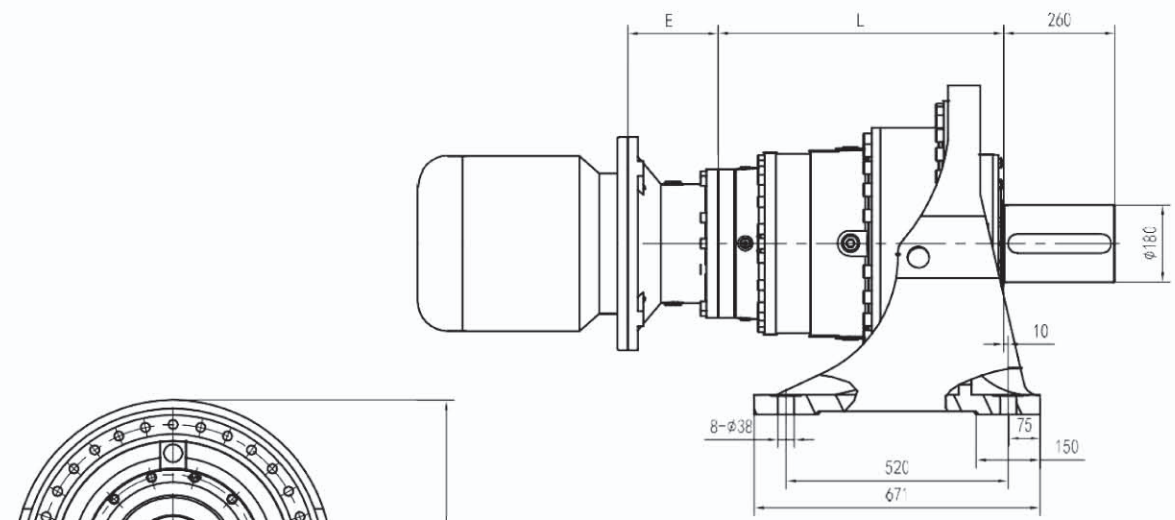

MS

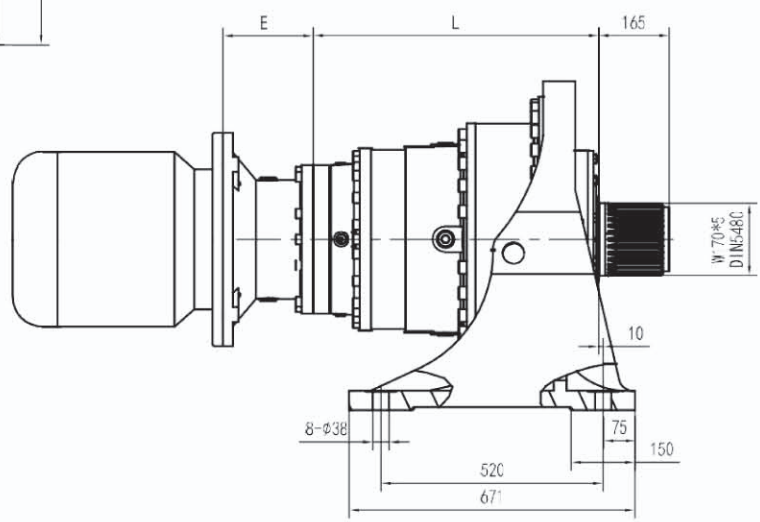

LP输出 LP VERSION	最大传动扭矩 MAX. TRANSMISSIBLE TORQUE	162000Nm

	L				Kg				E					
	HS HK	MK MS	LSH	LP	HS HK	MK MS	LSH	LP	IEC 132	IEC 160	IEC 180	IEC 200	IEC 225	IEC 250
GTN16 L1	179	289	179	179	500	700	430	450						
GTN16 L2	431	541	431	431	590	790	520	540						
GTN16 L3	564	674	564	564	640	840	570	590			195	186	216	215
GTN16 L4	653	763	653	653	660	860	590	610	114	144	144	174		

GTN16 L

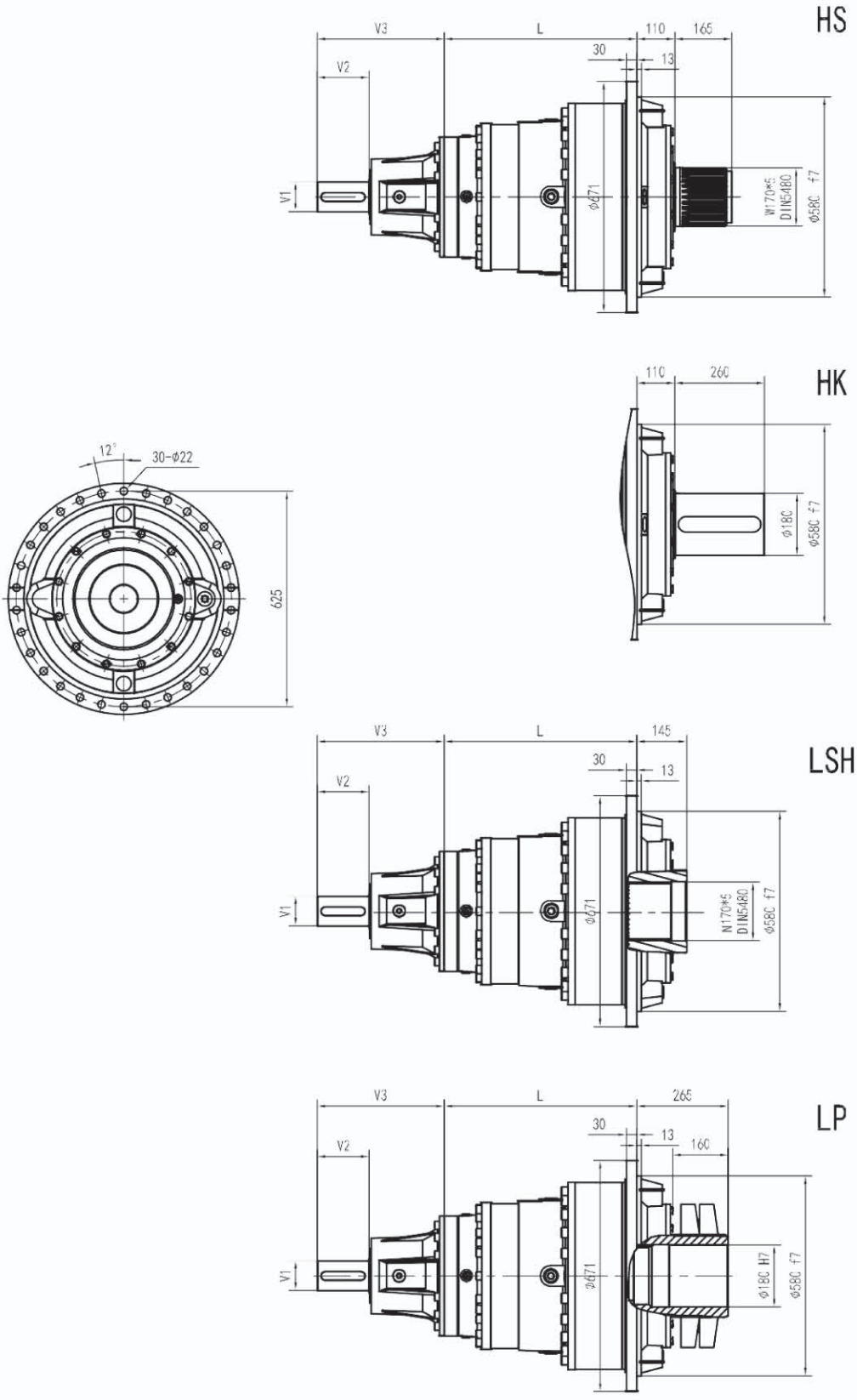
HS
V3
L
110
165
30
13
V2
V1
Φ471
W170*5
DIN5480
Φ580 f7
HK
110
260
Φ180
Φ580 f7
12°
30-Φ22
625
LSH
V3
L
145
30
13
V2
V1
Φ471
W170*5
DIN5480
Φ580 f7
LP
V3
L
265
30
13
160
V2
V1
Φ471
Φ180 H7
Φ580 f7

GTN16 L

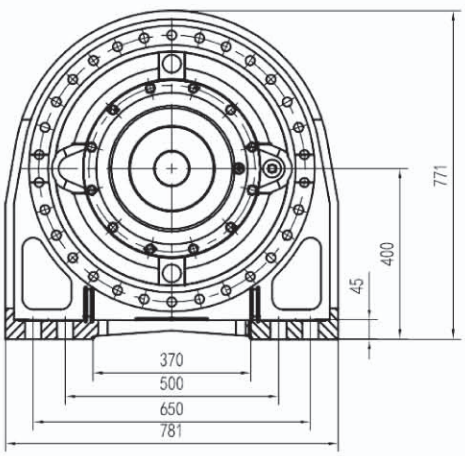

MK

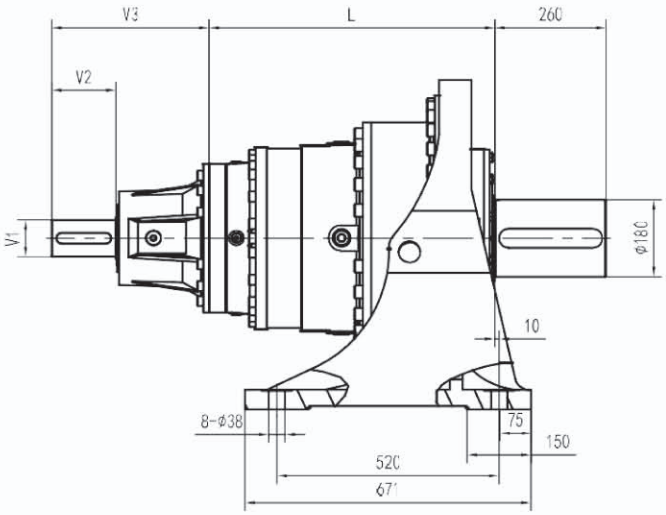

MS

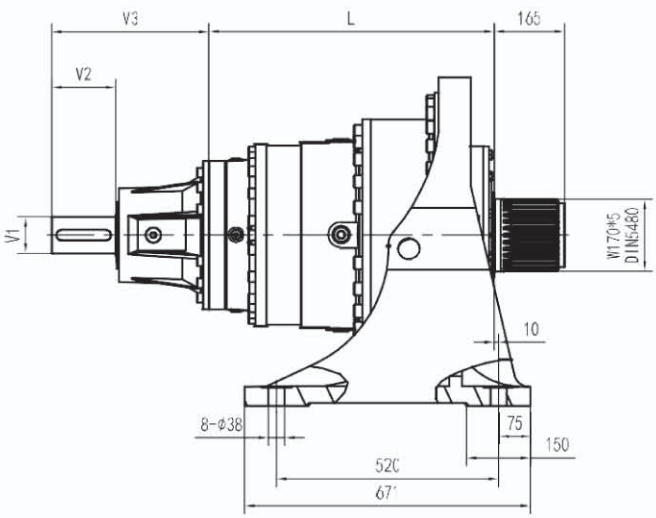

LP输出 LP VERSION	最大传动扭矩 MAX. TRANSMISSIBLE TORQUE	162000Nm

	L				Kg				V1	V2	V3	Kg	V1	V2	V3	Kg
	HS HK	MK MS	LSH	LP	HS HK	MK MS	LSH	LP								
GTN16 L1	179	289	179	179	500	700	430	450								
GTN16 L2	431	541	431	431	590	790	520	540	80	130	348	35				
GTN16 L3	564	674	564	564	640	840	570	590	80	130	315	35	60	105	313	28
GTN16 L4	653	763	653	653	660	860	590	610	48	82	239	15				

GTN16 R

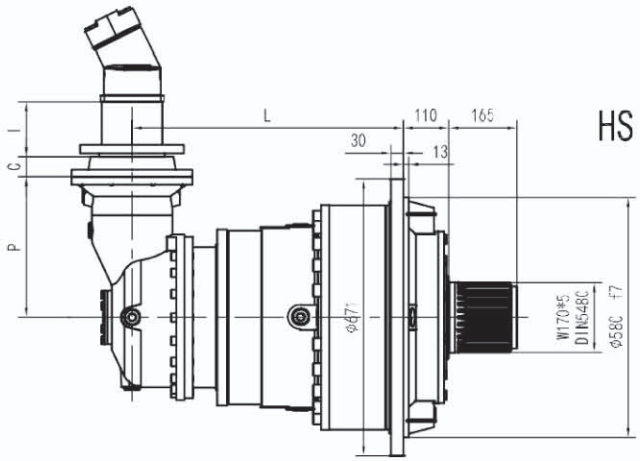
HS
L
110
165
30
13
I
C
P
φ471
W170*5
DIN5480
φ580 f7

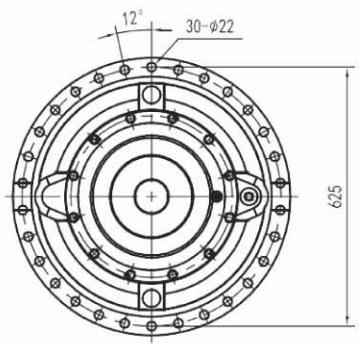
12°
30-φ22
625

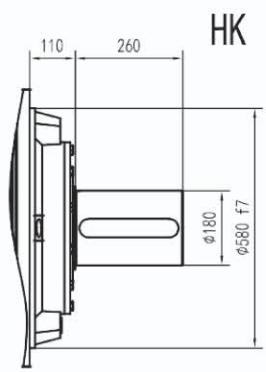
HK
110
260
φ180
φ580 f7

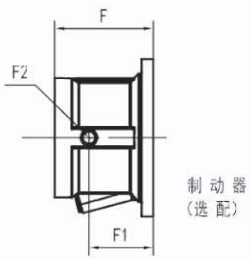
F
F2
F1
制 动 器
(选 配)

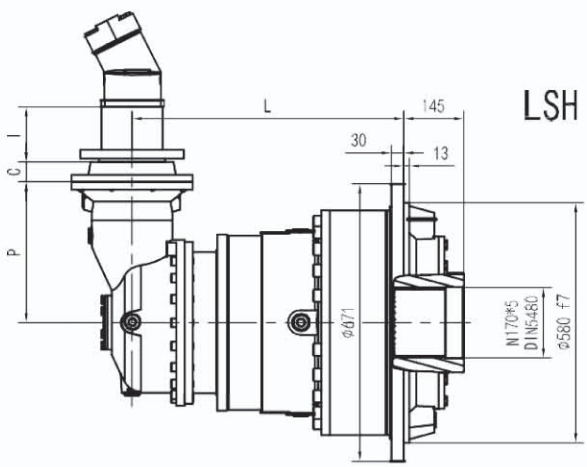
LSH
L
145
30
13
I
C
P
φ471
N170*5
DIN5480
φ580 f7

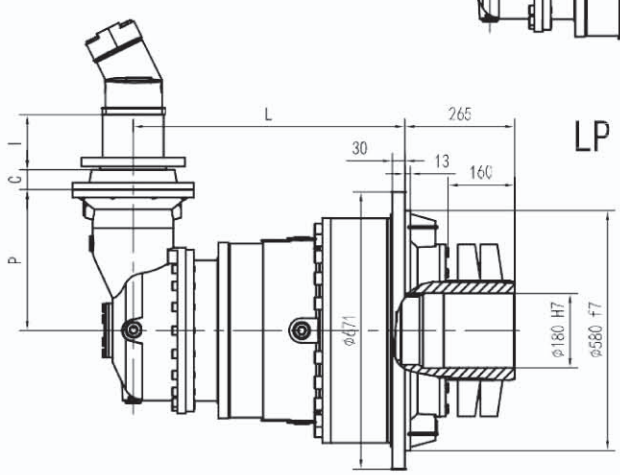
LP
L
265
30
13
160
I
C
P
φ471
φ180 H7
φ580 f7

GTN16 R

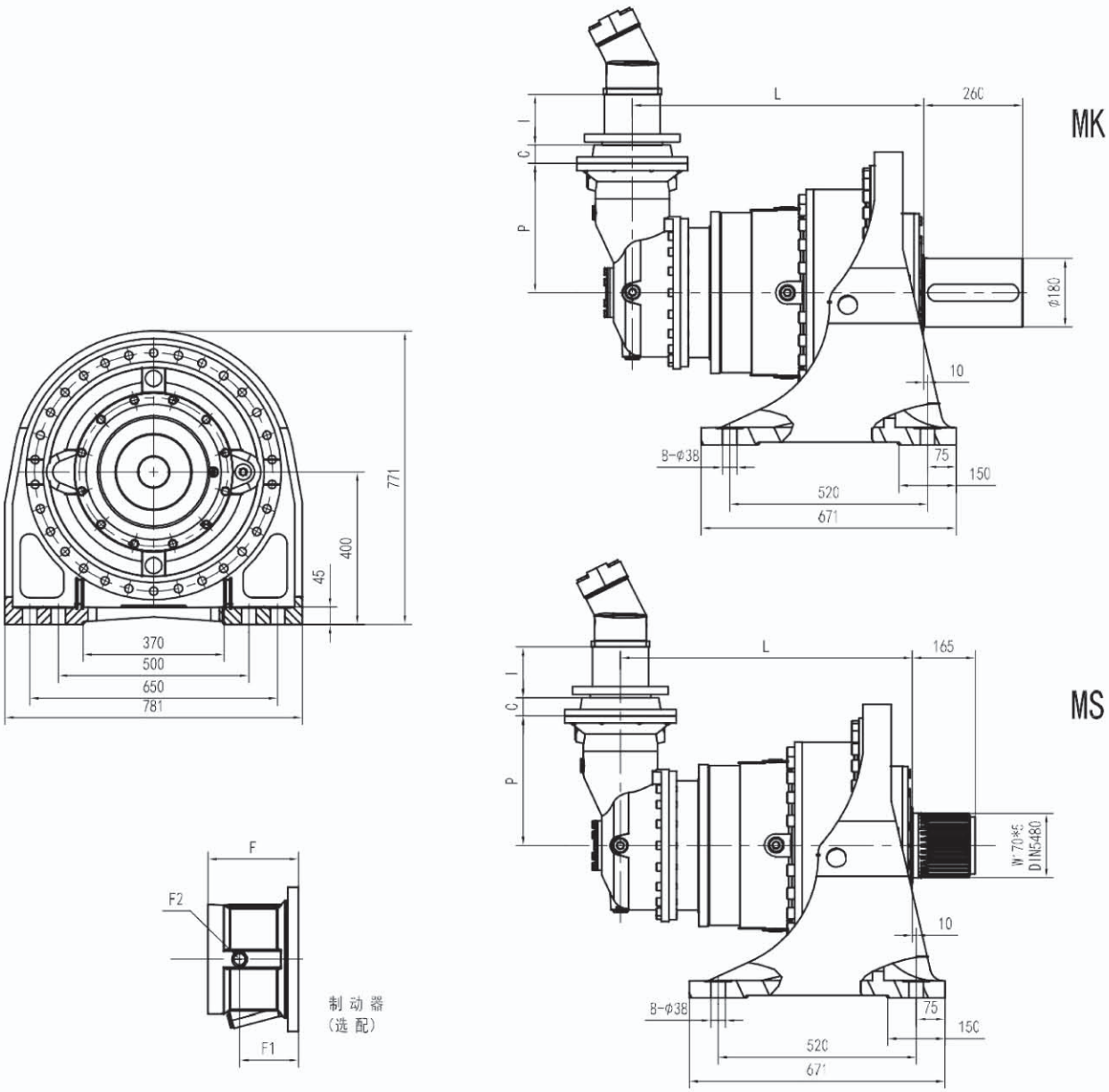

LP输出 LP VERSION	最大传动扭矩 MAX. TRANSMISSIBLE TORQUE	162000Nm

	L				P	Kg				C	输入 Input	I	F	F1	F2	类型 Type	输入 Input	Kg
	HS HK	MK MS	LSH	LP		HS HK	MK MS	LSH	LP									
GTN16 R3(B)	656	766	656	656	345	710	910	640	660	45	B	联系厂家	195	147	1/4G	6	B	28
GTN16 R3(B)	656	766	656	656	390	720	920	650	670	45	B		195	147	1/4G	6	B	28
GTN16 R4	683	793	683	683	225	690	890	620	640	37	A		145	95	1/4G	5	A	16

GTN16 R

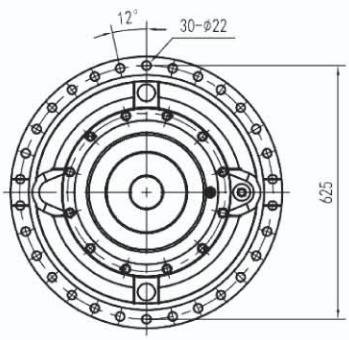
12°
30-φ22
625

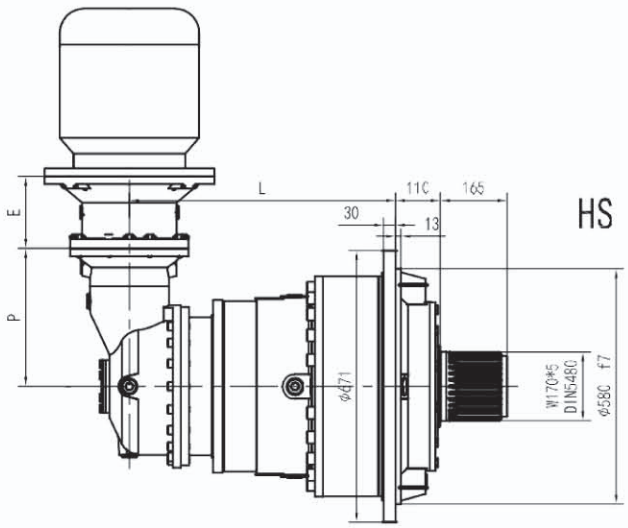
HS
L
110
165
30
13
E
P
φ471
W170*5
DIN5480
φ580 f7

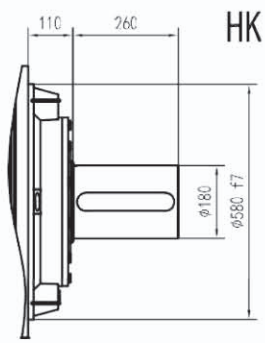
HK
110
260
φ180
φ580 f7

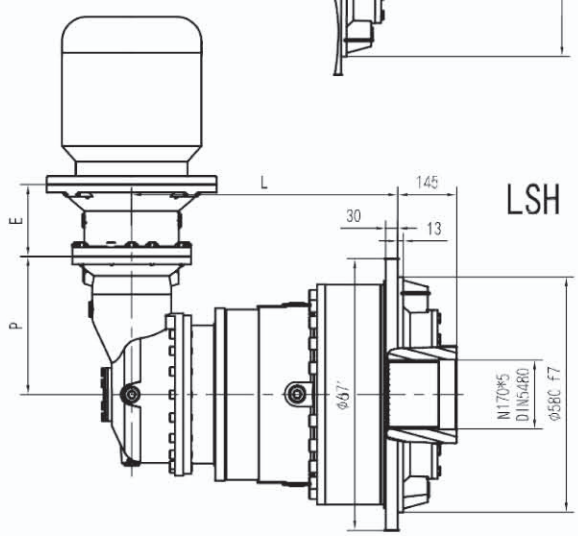
LSH
L
145
30
13
E
P
φ471
N170*5
DIN5480
φ580 f7

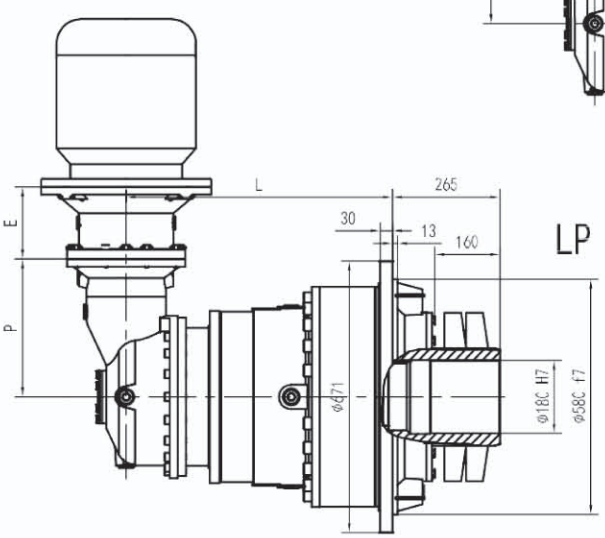
LP
L
265
30
13
160
E
P
φ471
φ180 H7
φ580 f7

GTN16 R

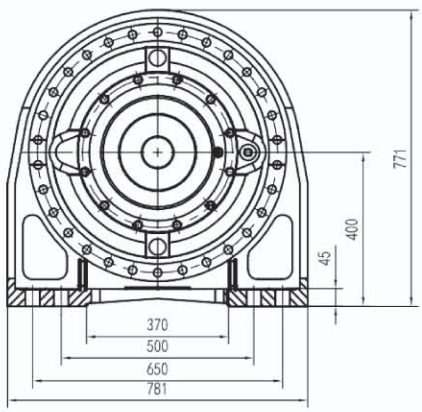

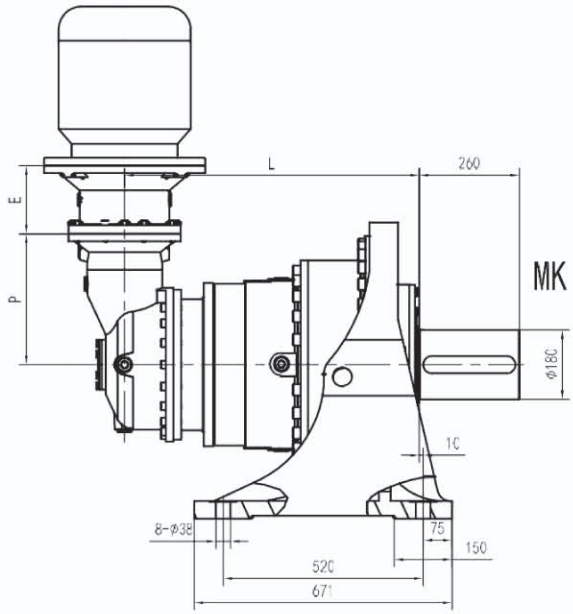

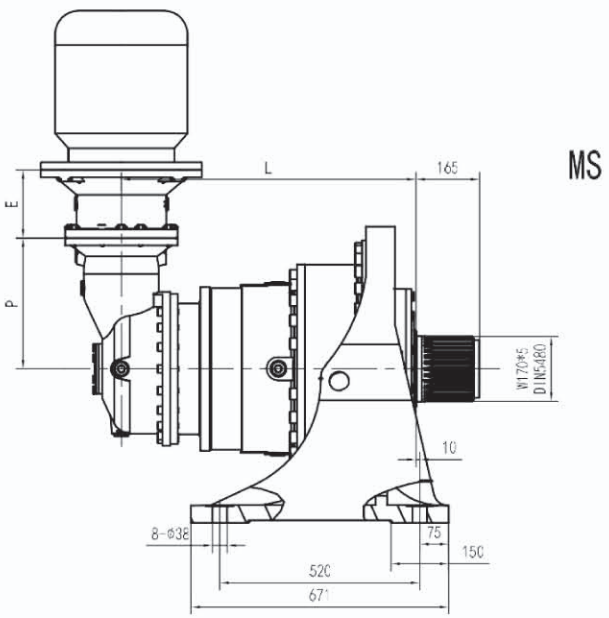

LP输出 LP VERSION	最大传动扭矩 MAX. TRANSMISSIBLE TORQUE	162000Nm

	L				P	Kg				E					
	HS HK	MK MS	LSH	LP		HS HK	MK MS	LSH	LP	IEC 132	IEC 160	IEC 180	IEC 200	IEC 225	IEC 250
GTN16 R3 (B)	656	766	656	656	345	710	910	640	660			152	182	212	193
GTN16 R3 (C)	656	766	656	656	390	720	920	650	670			152	182	212	193
GTN16 R4	683	793	683	683	225	690	890	620	640	114	144	144	174		

GTN16 R

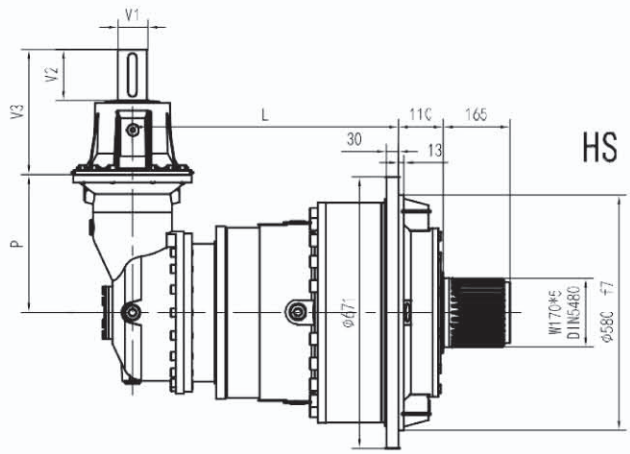
V1
V2
V3
L
110
165
30
13
HS
P
ø671
W170*5
DIN5480
ø580 f7

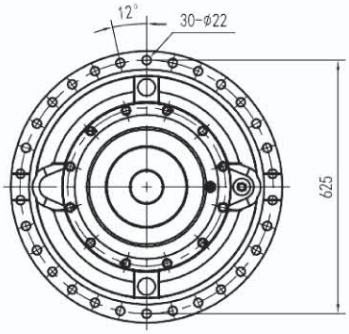
12°
30-ø22
625

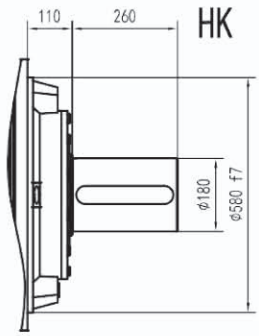
110
260
HK
ø180
ø580 f7

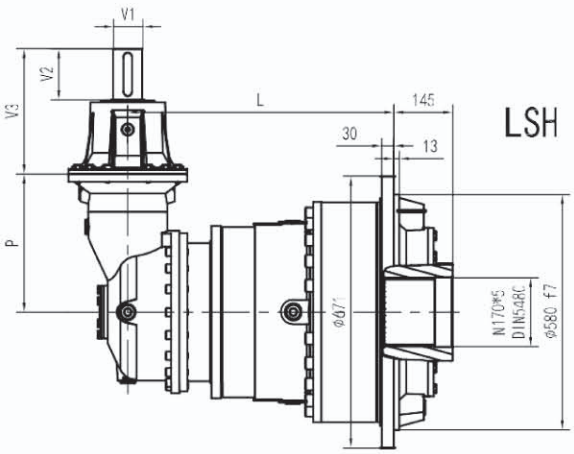
V1
V2
V3
L
145
30
13
LSH
P
ø671
N170*5
DIN5480
ø580 f7

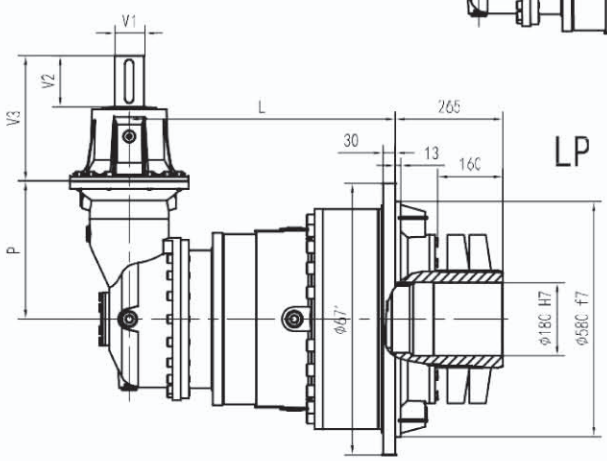
V1
V2
V3
L
265
30
13
160
LP
P
ø671
ø180 H7
ø580 f7

GTN16 R

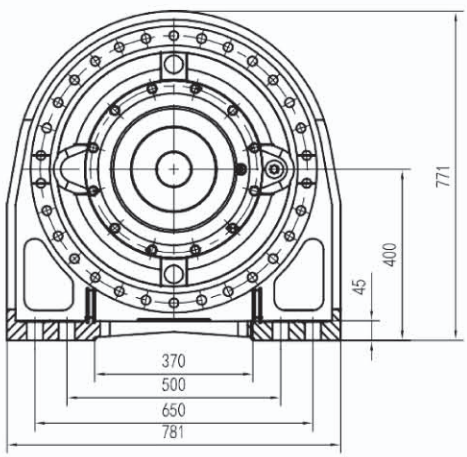

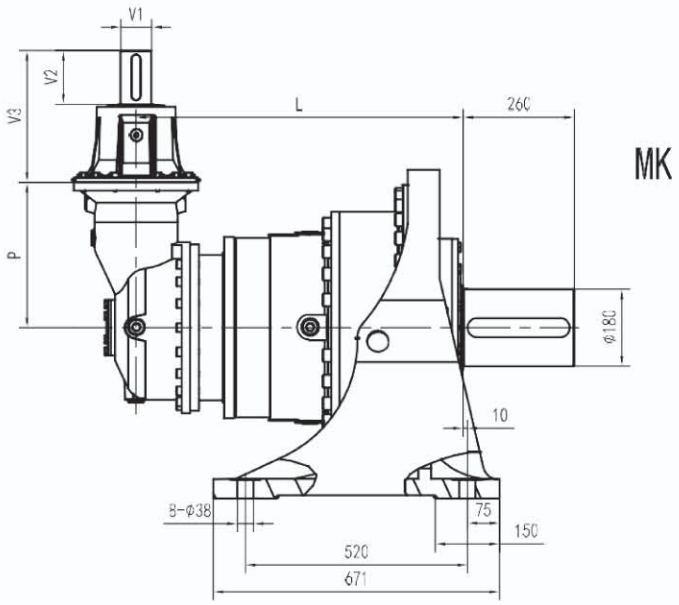

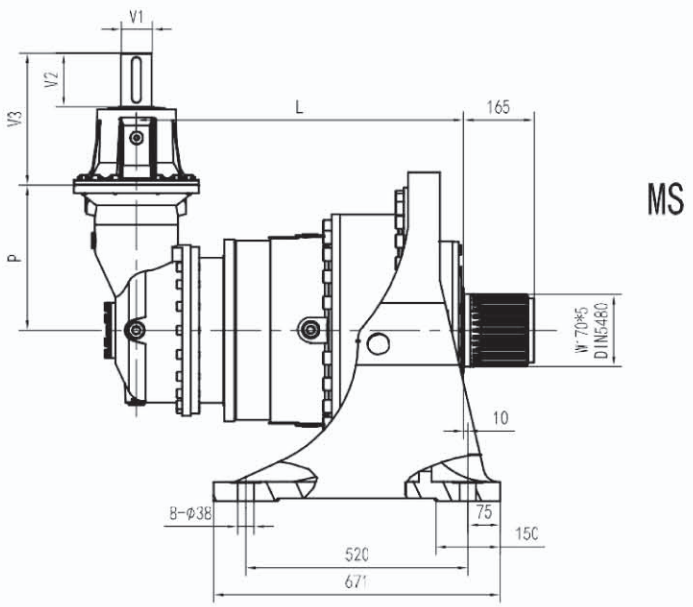

LP输出 LP VERSION	最大传动扭矩 MAX. TRANSMISSIBLE TORQUE	162000Nm

	L				P	Kg				V1	V2	V3	Kg	V1	V2	V3	Kg
	HS HK	MK MS	LSH	LP		HS HK	MK MS	LSH	LP								
GTN16 R3 (B)	656	766	656	656	345	710	910	640	660	60	105	307	23				
GTN16 R3 (C)	656	766	656	656	390	720	920	650	670	60	105	307	23				
GTN16 R4	683	793	683	683	225	690	890	620	640	48	82	239	15				

GTN16 L - GTN16 R

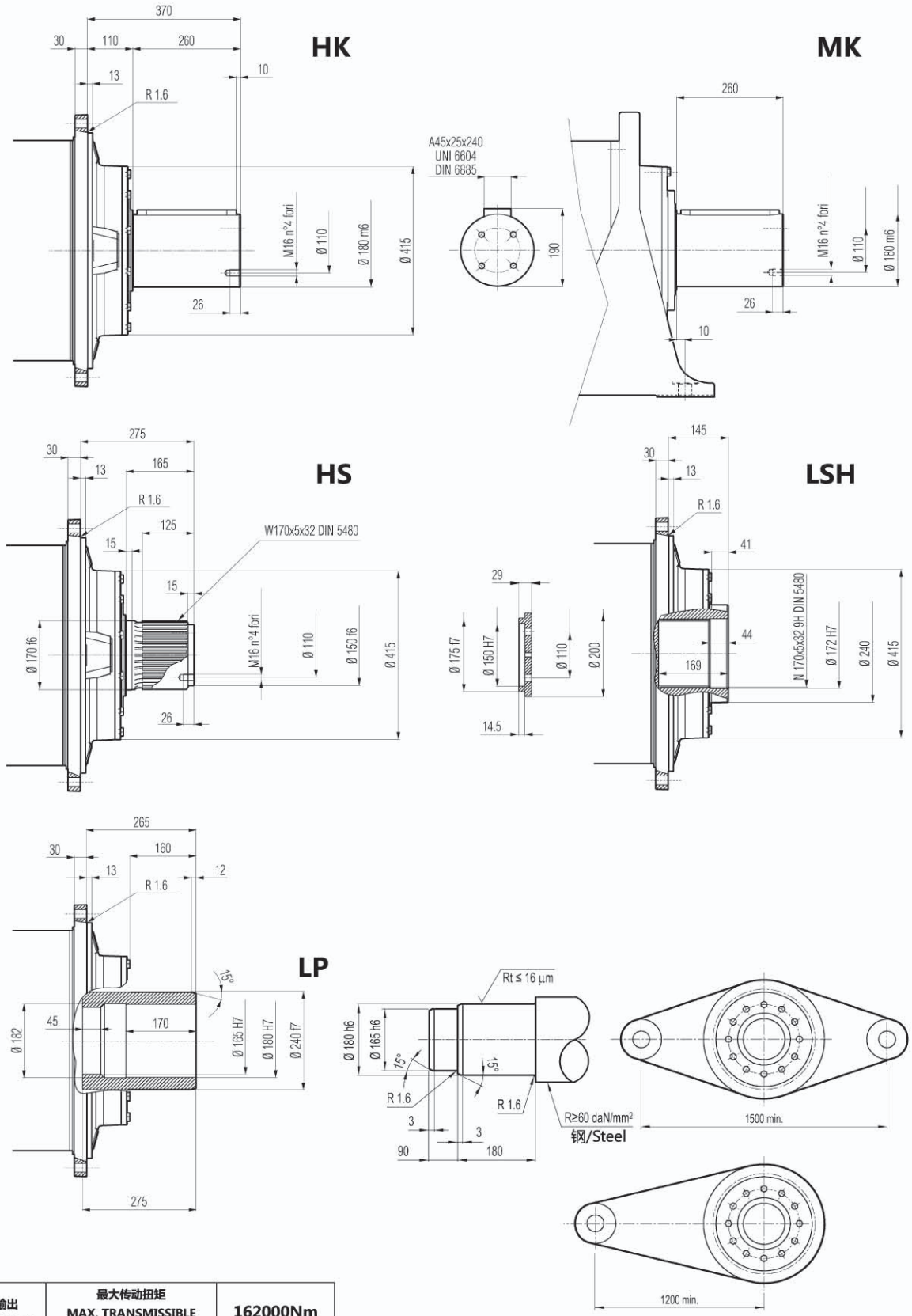

LP输出 LP VERSION	最大传动扭矩 MAX. TRANSMISSIBLE TORQUE	162000Nm

GTN16 L - GTN16 R

法兰/Flange

FOA

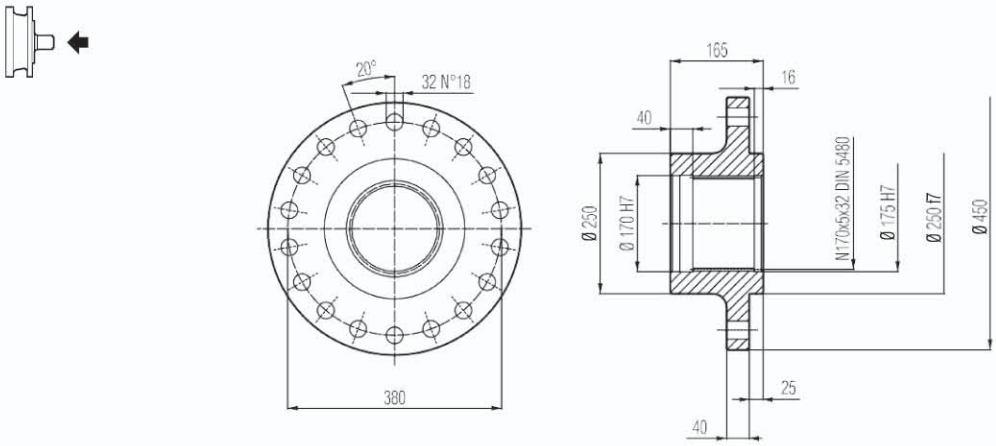

材料：C40
Material : Steel C40

套筒联轴器/Sleeve couplings

HOS

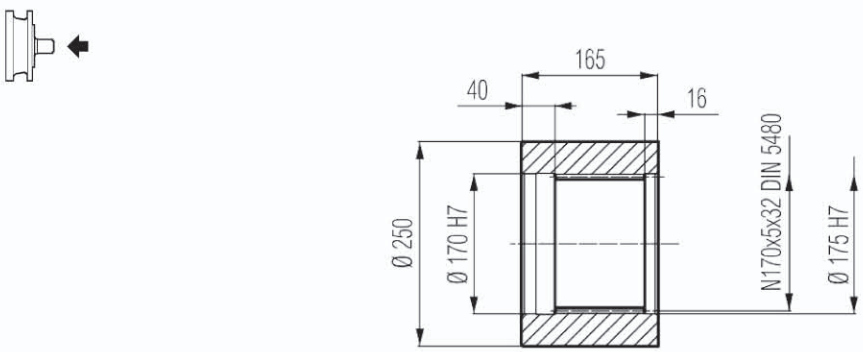

材料：16CrNi4
Material: Steel 16CrNi4

花键棒料/Splined bars

SOF

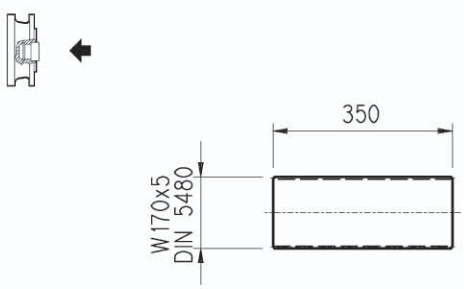

表面硬化钢18NiCrMo5 NUI5331,表面必须硬化50-55HRC
Case hardening steel 18NiCrMo5 UNI
5331 must be case hardened 50-55 HRC

锁紧盘/Shrink disc

LOP

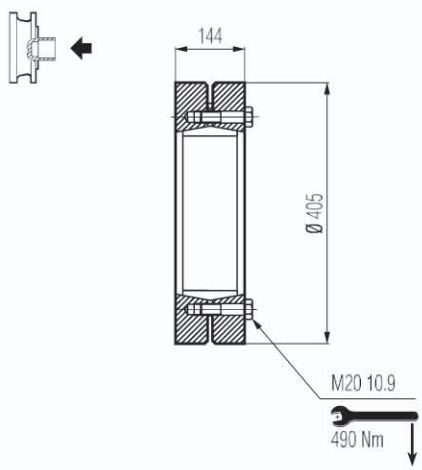

GTN16 L - GTN16 R

输入轴/Input shaft

S_ _

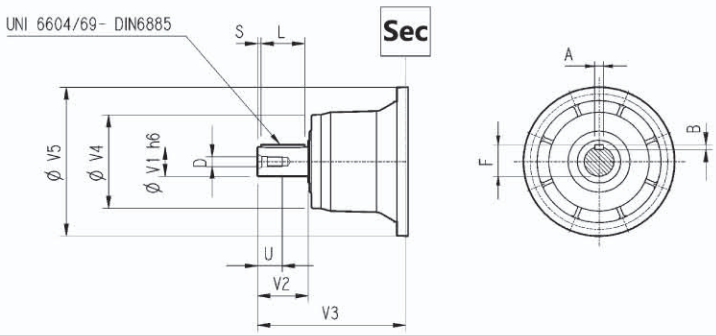

SV_ _

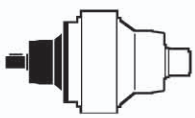

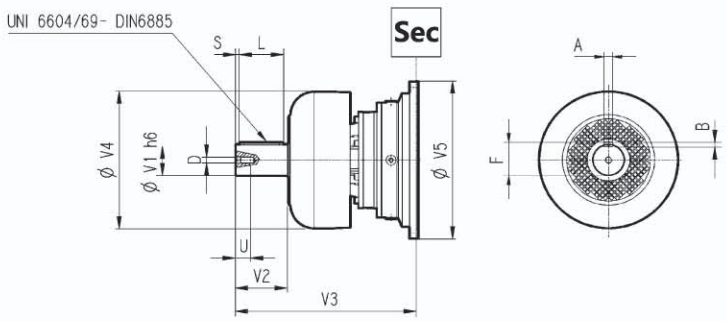

	CODE	V1	V2	V3	V4	V5	A	B	F	L	S	D	U
GTN16 L2	S11B	80	130	348	200	428	22	14	85	110	10	M16	36
	SV11B	80	130	456	347.5	428	22	14	85	110	10	M16	36
GTN16 L3	S07B	80	130	315	200	345	22	14	85	110	10	M16	36
	SV07B	80	130	375	200	345	22	14	85	110	10	M16	36
	S07A	60	105	313	155	345	18	11	64	90	7.5	M16	36
	SV07A	60	105	363	309	348	18	11	64	90	7.5	M16	36
GTN16 L4	S05B	48	82	239	155	245	14	9	51.5	70	6	M16	36
	SV05B	48	82	276	219.5	244	14	9	51.5	70	6	M16	36
GTN16 R3 (B) (C)	S06B	60	105	307	155	292	18	11	64	90	7.5	M16	36
	SV06B	60	105	357	309	292	18	11	64	90	7.5	M16	36
GTN16 R4	S05B	48	82	239	155	245	14	9	51.5	70	6	M16	36
	SV05B	48	82	276	219.5	244	14	9	51.5	70	6	M16	36

无电机适配器输入尺寸
Input dimension without motor adaptor

S_ _

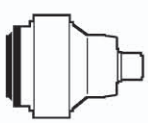

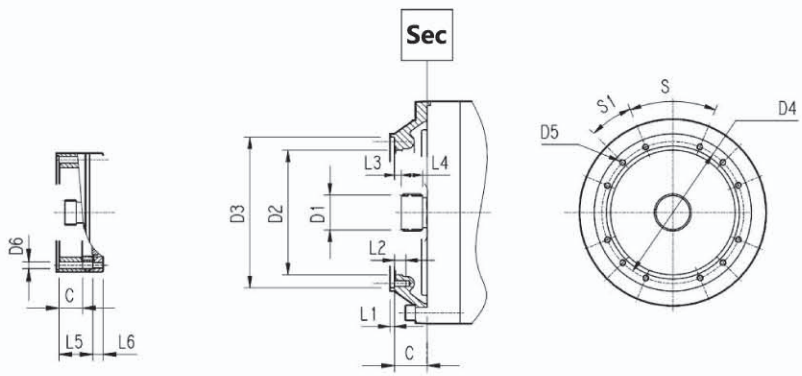

	CODE	C	D1	D2	D3	D4	D5	D6	L1	L2	L3	L4	L5	L6	S	S1	Input 输入
GTN16 L1	S9AE	116	100x94 DIN 5482	340	412 H7	390	M16 n° 18	/	7	30	8	55	/	/	20°	20°	E
GTN16 L2	S9AD	81	80x74 DIN 5482	270	335 H7	314	M16 n° 8	/	5	30	8.5	40	/	/	60°	30°	D
GTN16 L3	S9AB	51	58x53 DIN 5482	195	236 H7	222	M10 n° 12	/	4	18	11	22	/	/	45°	22.5°	B
GTN16 L4	S9AA	37	40x36 DIN 5482	140	178 H7	165	M10 n° 8	/	4	18	9	18	/	/	45°	45°	A
GTN16 R3 (B) (C)	S9AB	45	58x53 DIN 5482	195	236 H7	222	M10° 12	/	4	18	11	22	/	/	45°	22.5°	B
GTN16 R4	S9AA	37	40x36 DIN 5482	140	178 H7	165	M10 n° 8	11	4	18	9	18	/	/	45°	45°	A

GTN16 L - GTN16 R

Fh_2输出轴允许的径向和轴向载荷
$n_2 \cdot h$ =10000

Permissible radial and axial loadson output shaft with Fh_2
$n_2 \cdot h$ =10000

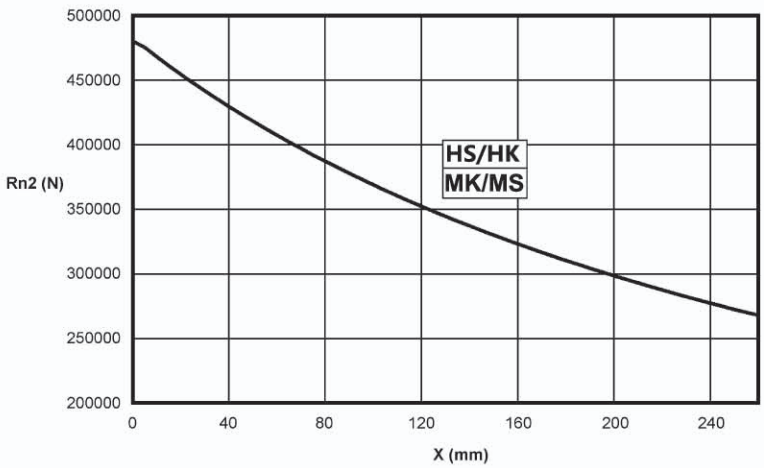

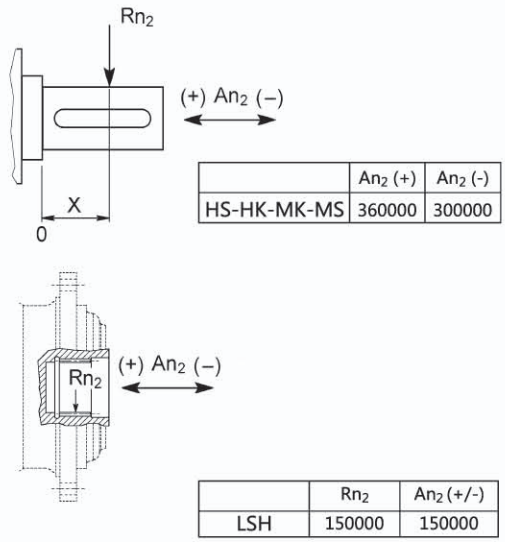

	An2 (+)	An2 (-)
HS-HK-MK-MS	360000	300000

	Rn2	An2 (+/-)
LSH	150000	150000

轴上的载荷修正系数 fh_2 Load corrective factor fh_2 on shafts	$Fh_2 = n_2 \cdot h$		10000	25000	50000	100000	500000	1000000
	fh_2	LSH	1	0.74	0.58	0.46	0.27	0.21
		HS-HK-MK-MS	1	0.76	0.61	0.50	0.31	0.25

Fh_1输入轴允许的径向和轴向载荷
$n_1 \cdot h$ =250000

Permissible radial loads on inputshaft with $Fh_1 : n_1 \cdot h$ =250000

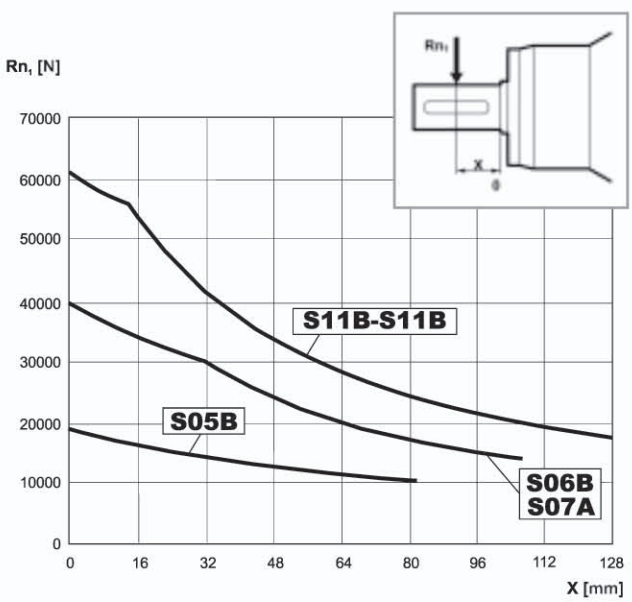

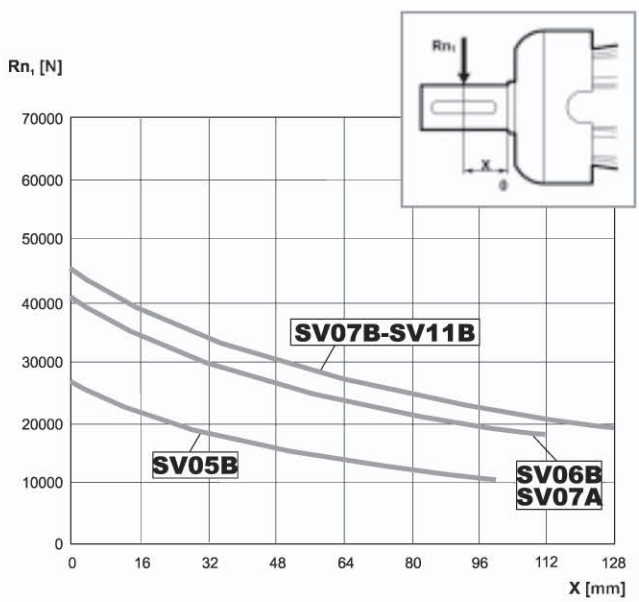

轴上的载荷修正系数fh_1 Load corrective factor fh_1 on shafts	$Fh_1 = n_1 \cdot h$	250000	500000	1000000	2000000	5000000	10000000
	fh_1	1	0.79	0.63	0.50	0.37	0.29

GTN17 L

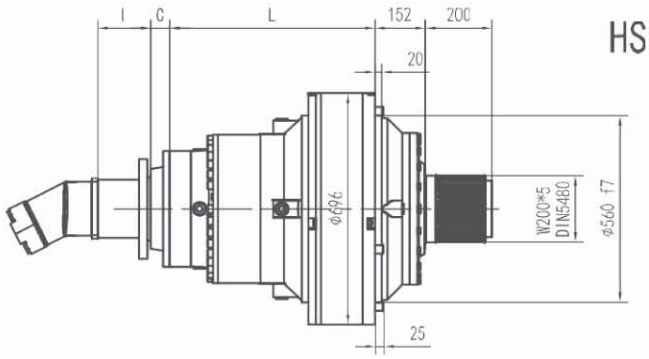
HS
I
C
L
152
200
20
φ496
W200*5
DIN5480
φ560 f7
25

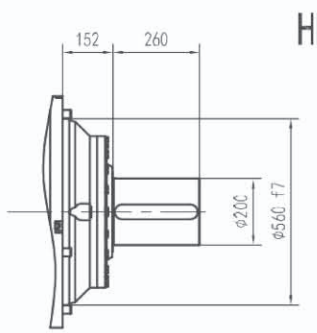
HK
152
260
φ200
φ560 f7

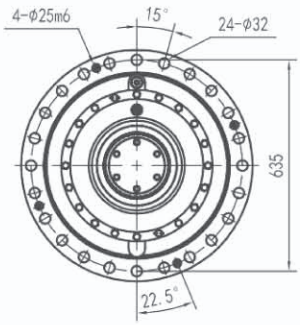
4-φ25m6
15°
24-φ32
635
22.5°

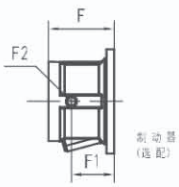
F
F2
F1
制动器
(选配)

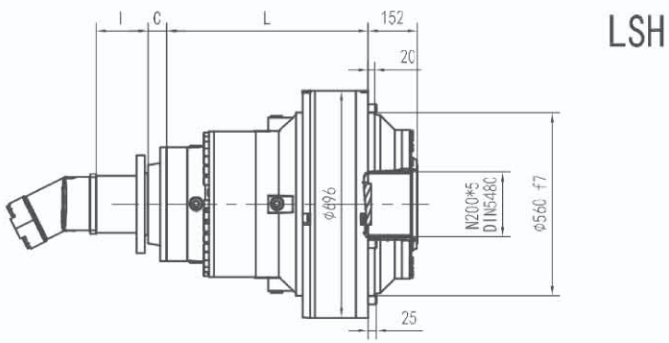
LSH
I
C
L
152
20
φ496
N200*5
DIN5480
φ560 f7
25

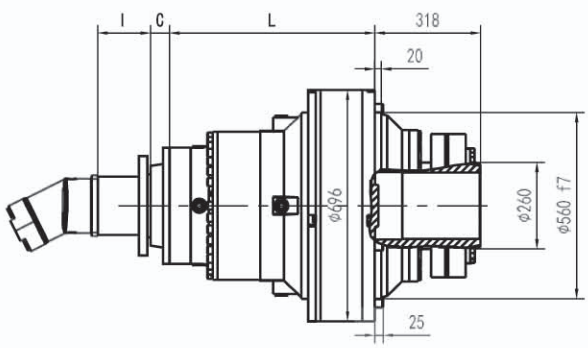
LP
I
C
L
318
20
φ496
φ260
φ560 f7
25

GTN17 L

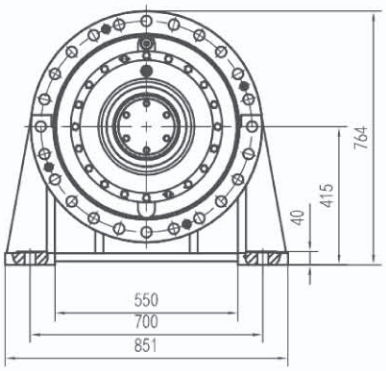

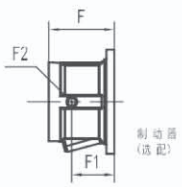

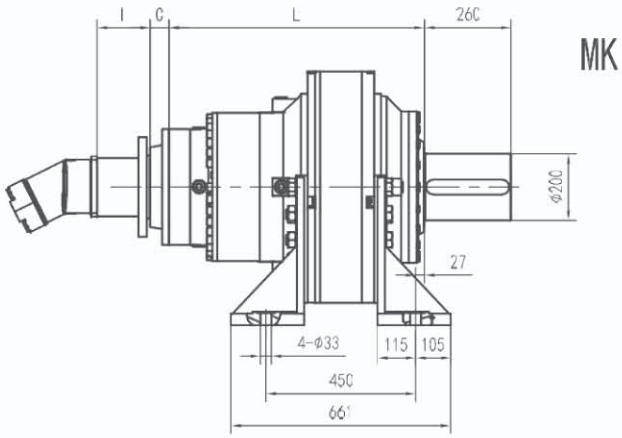

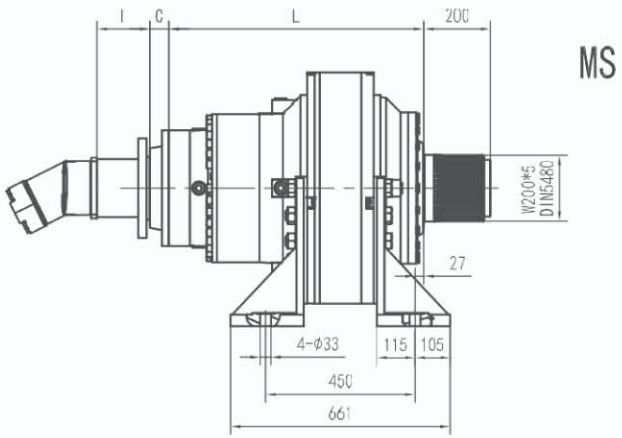

LP 输出 LP VERSION	最大传动扭矩 MAX. TRANSMISSIBLE TORQUE	216000Nm

	L				Kg				C	输入 Input	I	F	F1	F2	类型 Type	输入 Input	Kg
	HS HK	MK MS	LSH	LP	HS HK	MK MS	LSH	LP									
GTN17 L1	163	315	163	163	800	950	750	800	181	F							
GTN17 L2	472	624	472	472	930	1080	880	930	75	D	联系						
GTN17 L3	621	773	621	621	990	1140	940	990	51	B	厂家	201	153	1/4G	6	B	28
GTN17 L4	710	862	710	710	1002	1152	952	1002	37	A		145	95	1/4 G	5	A	16

GTN17 L

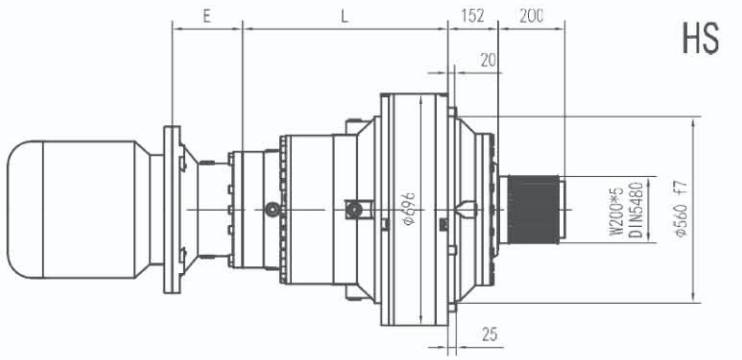
E
L
152
200
20
HS
φ496
W200*5
DIN5480
φ560 f7
25

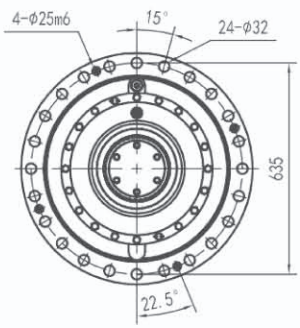
4-φ25m6
15°
24-φ32
635
22.5°

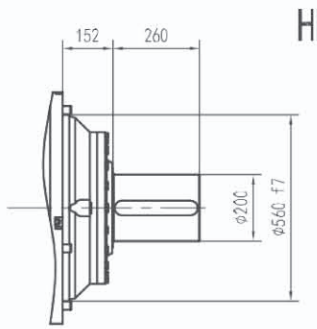
152
260
HK
φ200
φ560 f7

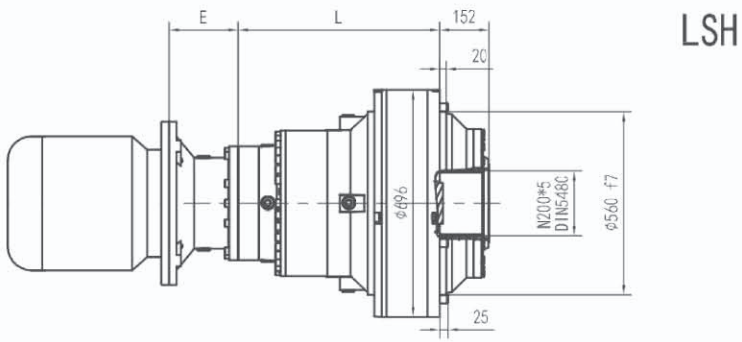
E
L
152
20
LSH
φ496
N200*5
DIN5480
φ560 f7
25

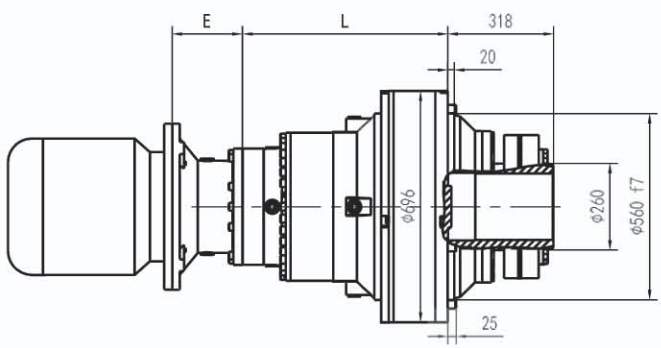
E
L
318
20
LP
φ496
φ260
φ560 f7
25

GTN17 L

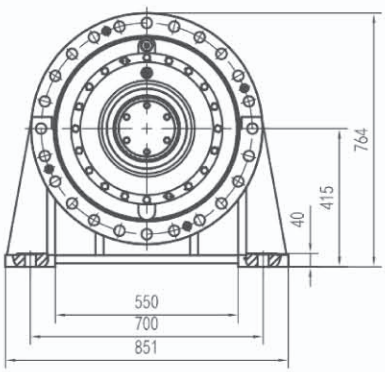

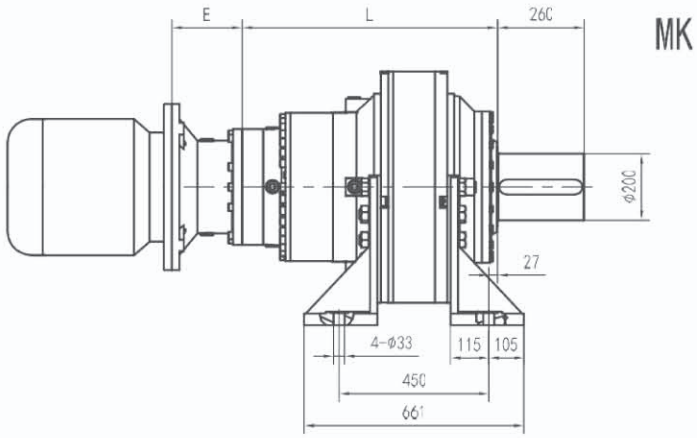

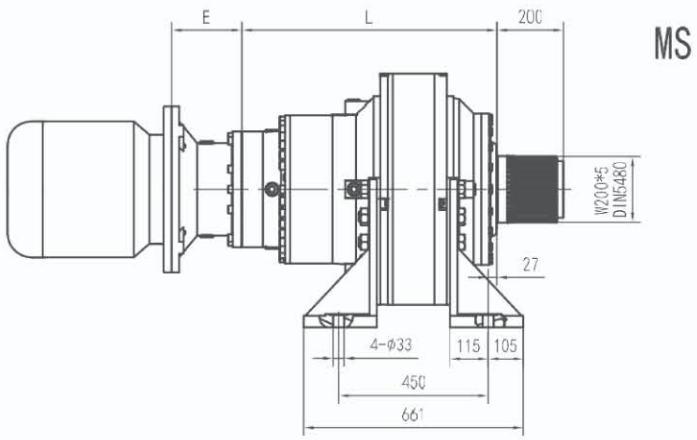

LP 输出 LP VERSION	最大传动扭矩 MAX. TRANSMISSIBLE TORQUE	216000Nm

	L				Kg				E					
	HS HK	MK MS	LSH	LP	HS HK	MK MS	LSH	LP	IEC 132	IEC 160	IEC 180	IEC 200	IEC 225	IEC 250
GTN17 L1	163	315	163	163	800	950	750	800						
GTN17 L2	472	624	472	472	930	1080	880	930						
GTN17 L3	621	773	621	621	990	1140	940	990			195	186	216	215
GTN17 L4	710	862	710	710	1002	1152	952	1002	114	144	144	174		

GTN17 L

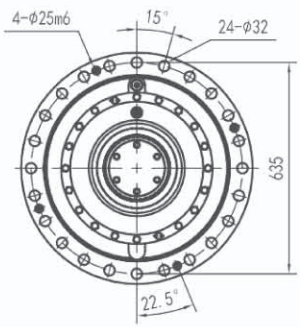

HS

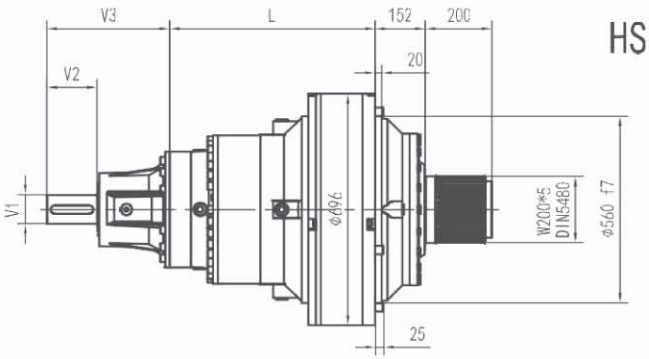

HK

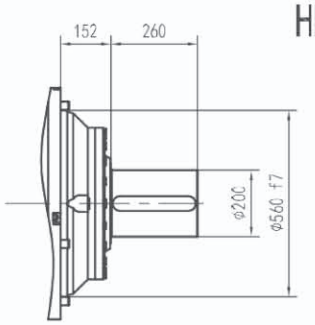

LSH

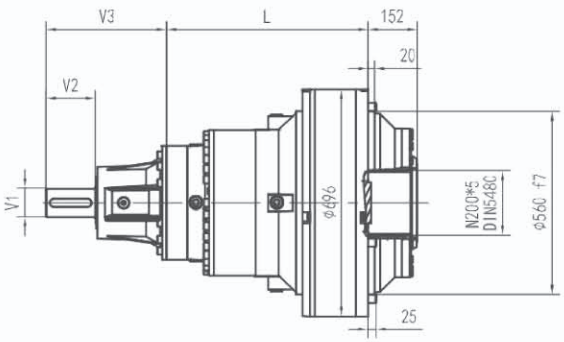

LP

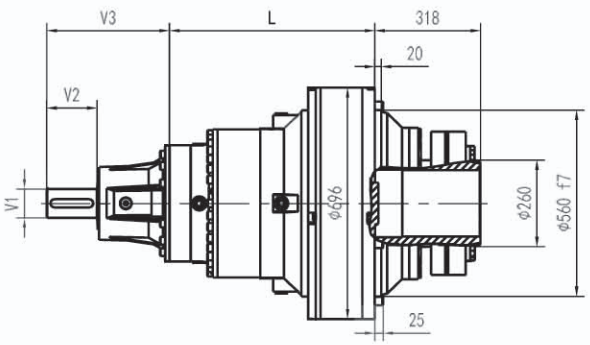

GTN17 L

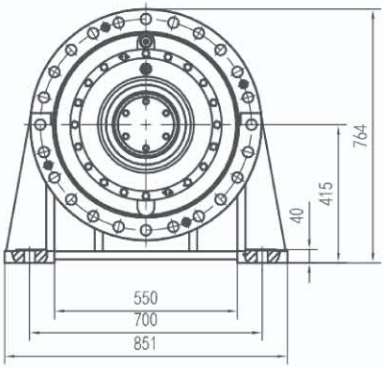

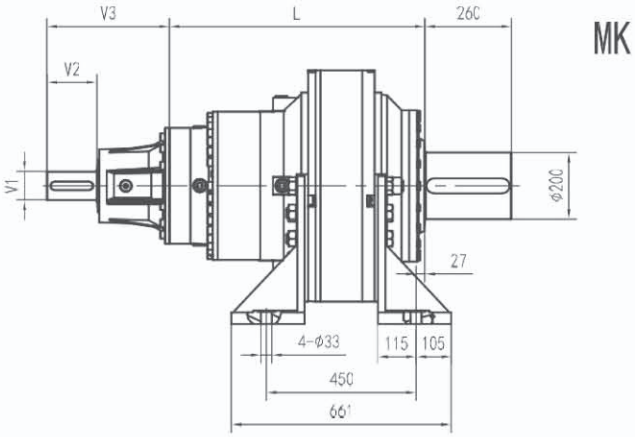

MK

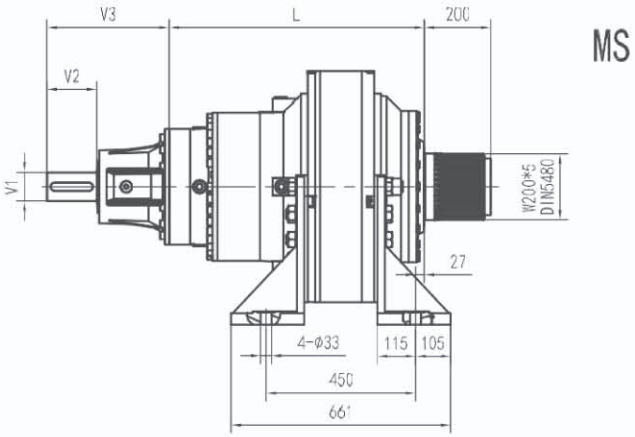

MS

LP 输出 LP VERSION	最大传动扭矩 MAX. TRANSMISSIBLE TORQUE	216000Nm

	L				Kg				V1	V2	V3	Kg	V1	V2	V3	Kg
	HS HK	MK MS	LSH	LP	HS HK	MK MS	LSH	LP								
GTN17 L1	163	315	163	163	800	950	750	800								
GTN17 L2	472	624	472	472	930	1080	880	930	80	130	343	35				
GTN17 L3	621	773	621	621	990	1140	940	990	80	130	315	35	60	105	313	28
GTN17 L4	710	862	710	710	1002	1152	952	1002	48	82	239	15				

GTN17 R

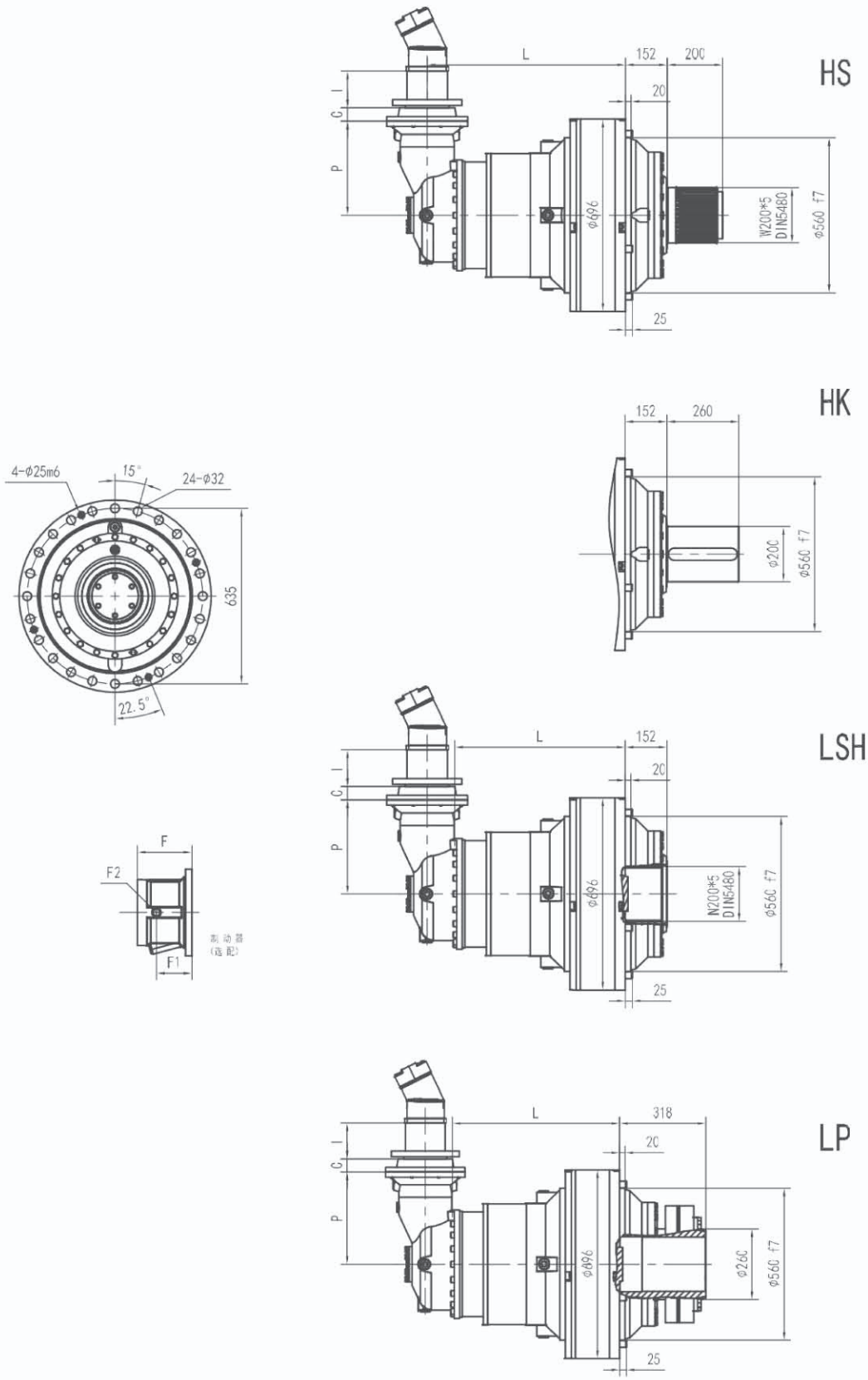
HS
L
152
200
20
I
C
P
φ696
W200*5
DIN5480
φ560 f7
25
HK
152
260
φ200
φ560 f7
4-φ25m6
15°
24-φ32
635
22.5°
LSH
L
152
20
I
C
P
φ696
N200*5
DIN5480
φ560 f7
25
F
F2
F1
制动器
(选配)
LP
L
318
20
I
C
P
φ696
φ260
φ560 f7
25

GTN17 R

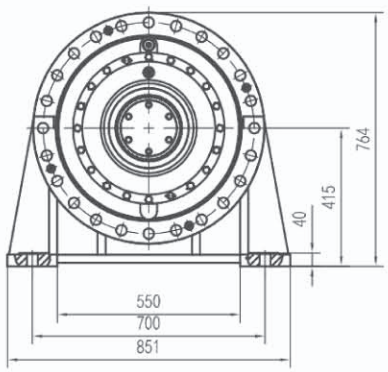

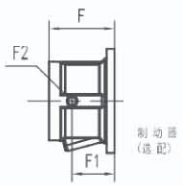

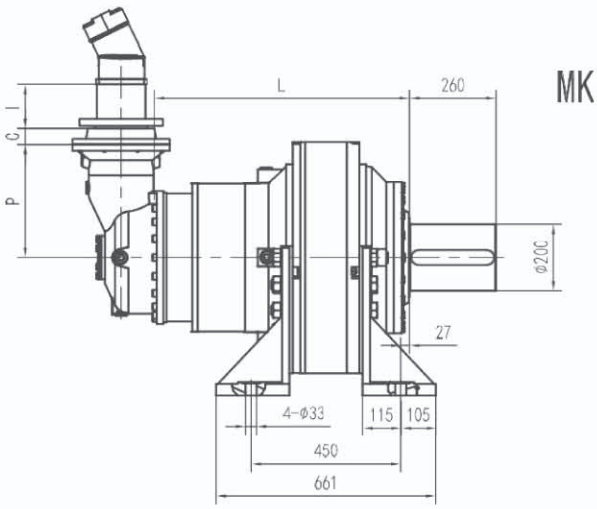

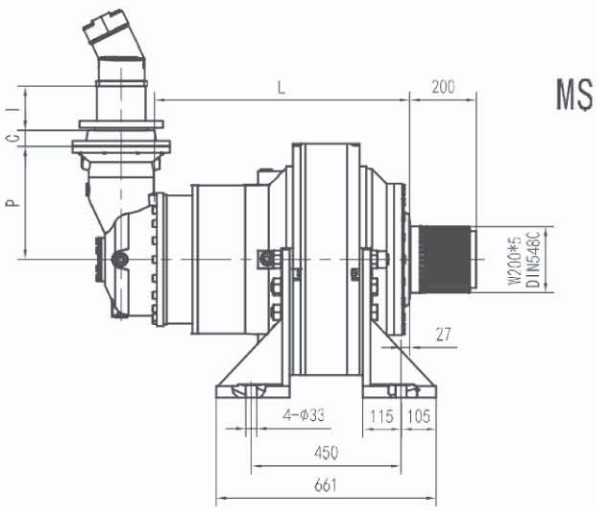

LP 输出 LP VERSION	最大传动扭矩 MAX. TRANSMISSIBLE TORQUE	216000Nm

	L				P	Kg				C		I							
	HS HK	MK MS	LSH	LP		HS HK	MK MS	LSH	LP		输入 Input		F	F1	F2	类型 Type	输入 Input	Kg
GTN17 R3 (B)	701	853	701	701	345	1060	1210	1010	1060	45	B	联系厂家	195	147	1/4G	6	B	28
GTN17 R3 (C)	701	853	701	701	390	1070	1220	1020	1070	45	B		195	147	1/4G	6	B	28
GTN17 R4	740	892	740	740	225	1040	1190	990	1040	37	A		105	65	1/4G	4	A	10

GTN17 R

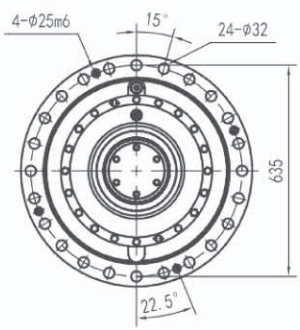
4-φ25m6
15°
24-φ32
635
22.5°

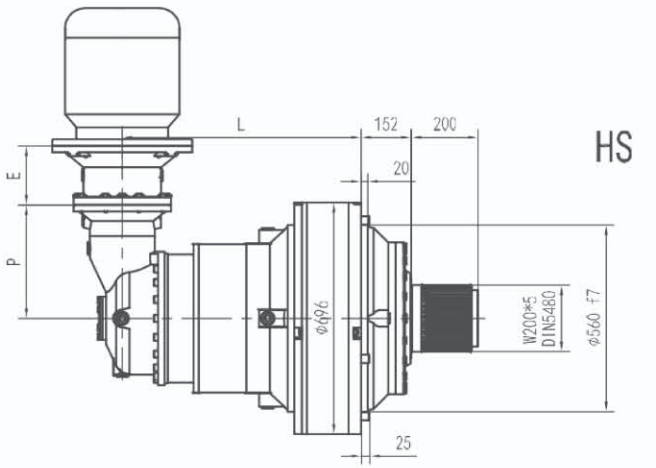
HS
L
152
200
20
E
P
φ496
W200*5
DIN5480
φ560 f7
25

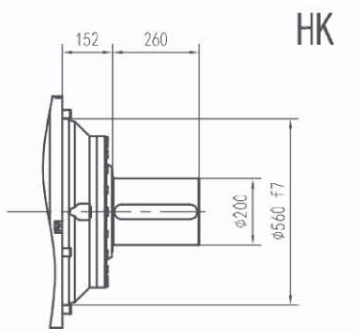
HK
152
260
φ200
φ560 f7

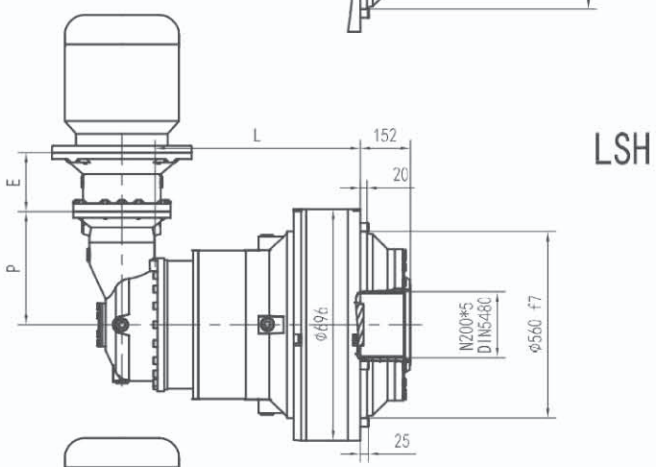
LSH
L
152
20
E
P
φ496
N200*5
DIN5480
φ560 f7
25

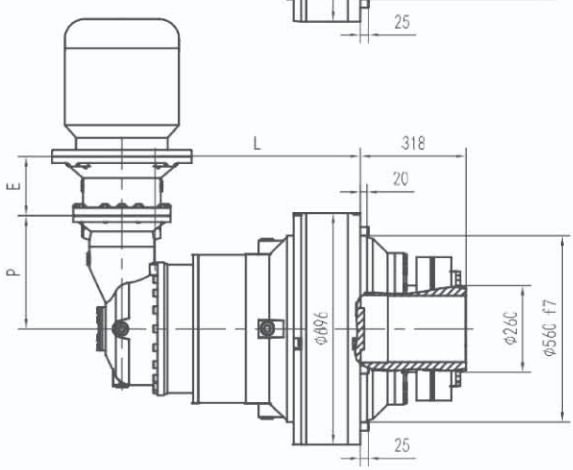
LP
L
318
20
E
P
φ496
φ260
φ560 f7
25

GTN17 R

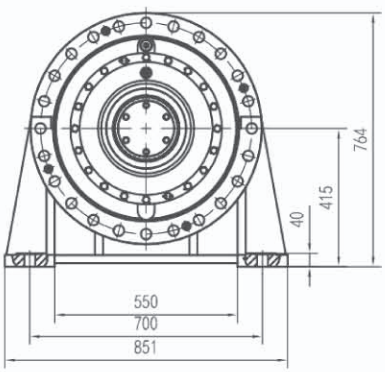

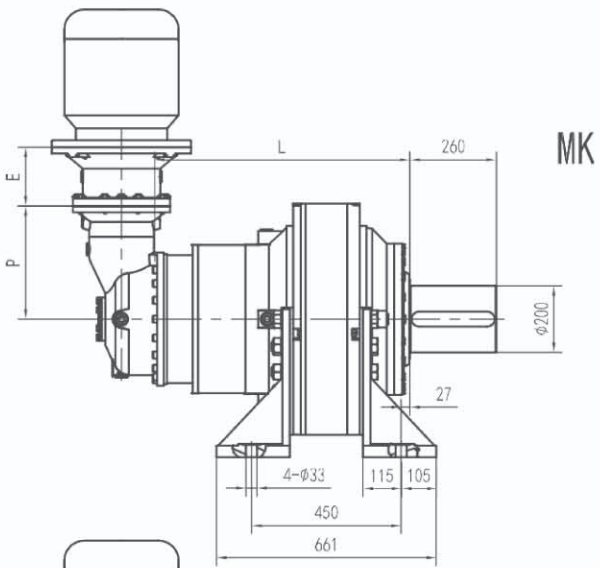

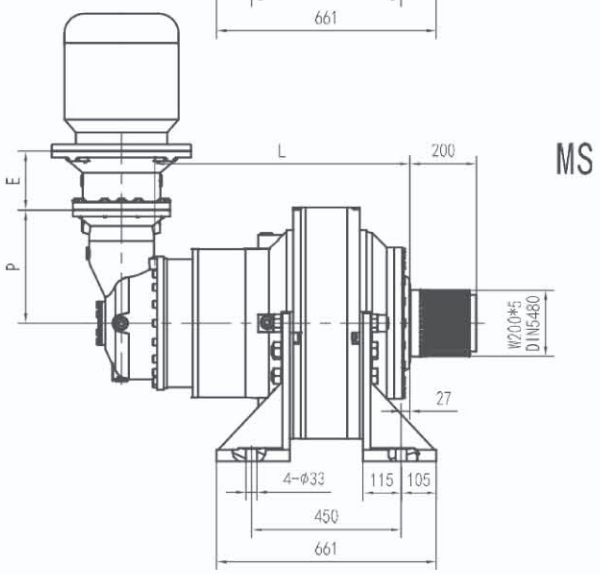

LP 输出 LP VERSION	最大传动扭矩 MAX. TRANSMISSIBLE TORQUE	216000Nm

	L				P	Kg				E					
	HS HK	MK MS	LSH	LP		HS HK	MK MS	LSH	LP	IEC 132	IEC 160	IEC 180	IEC 200	IEC 225	IEC 250
GTN17 R3 (B)	701	853	701	701	345	1060	1210	1010	1060			152	182	212	193
GTN17 R3 (C)	701	853	701	701	390	1070	1220	1020	1070			152	182	212	193
GTN17 R4	740	892	740	740	225	1040	1190	990	1040	114	144	144	174		

GTN17 R

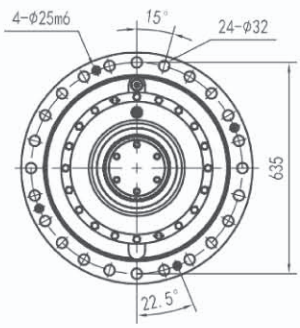

HS

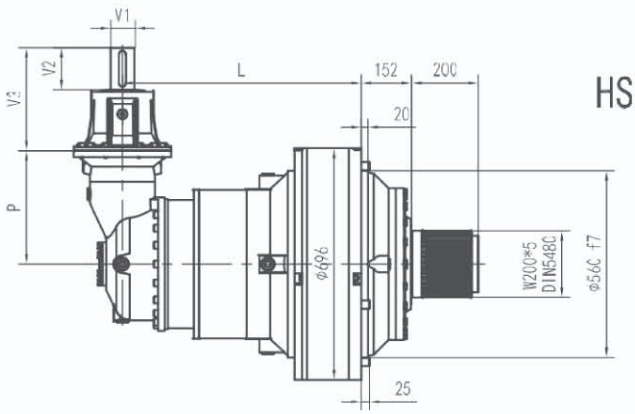

HK

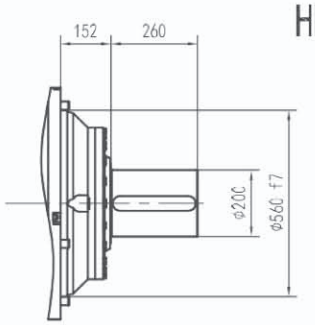

LSH

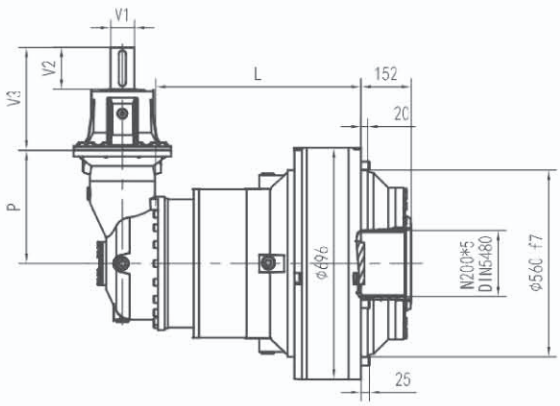

LP

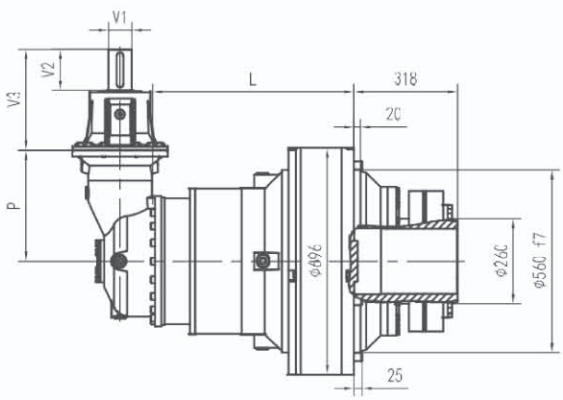

GTN17 R

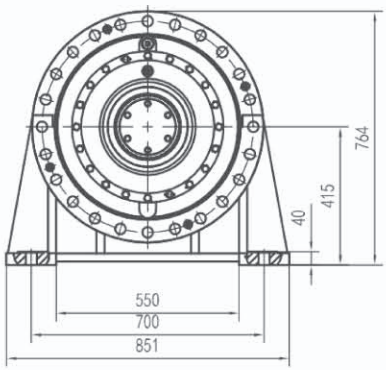

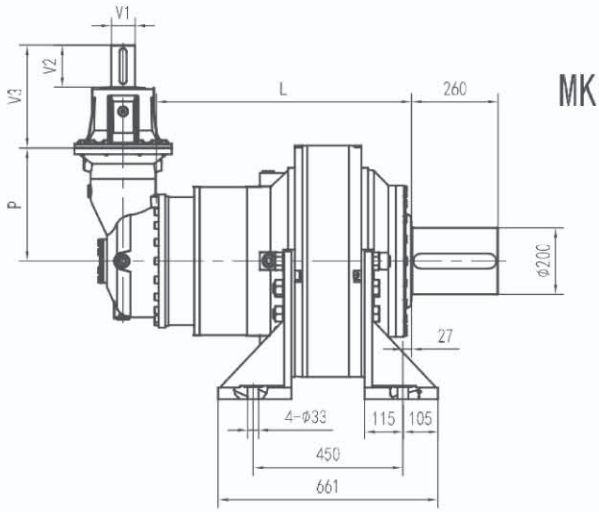

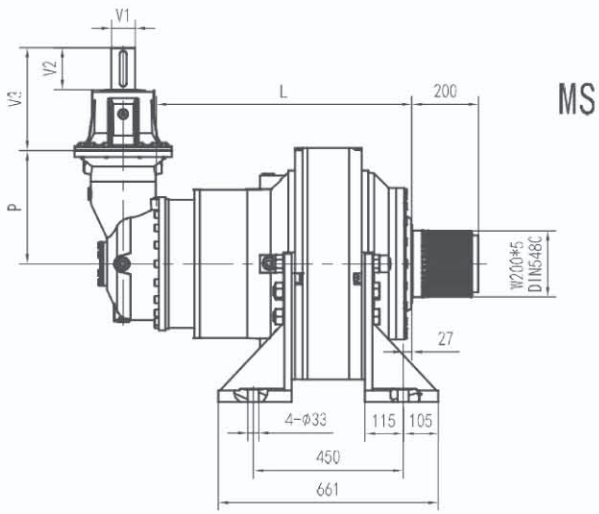

LP 输出 LP VERSION	最大传动扭矩 MAX. TRANSMISSIBLE TORQUE	216000Nm

	L				P	Kg				V1	V2	V3	Kg	V1	V2	V3	Kg
	HS HK	MK MS	LSH	LP		HS HK	MK MS	LSH	LP								
GTN17 R3 (B)	701	853	701	701	345	1060	1210	1010	1060	60	105	307	23				
GTN17 R3 (C)	701	853	701	701	390	1070	1220	1020	1070	60	105	307	23				
GTN17 R4	740	892	740	740	225	1040	1190	990	1040	48	82	239	15				

GTN17 L - GTN17 R

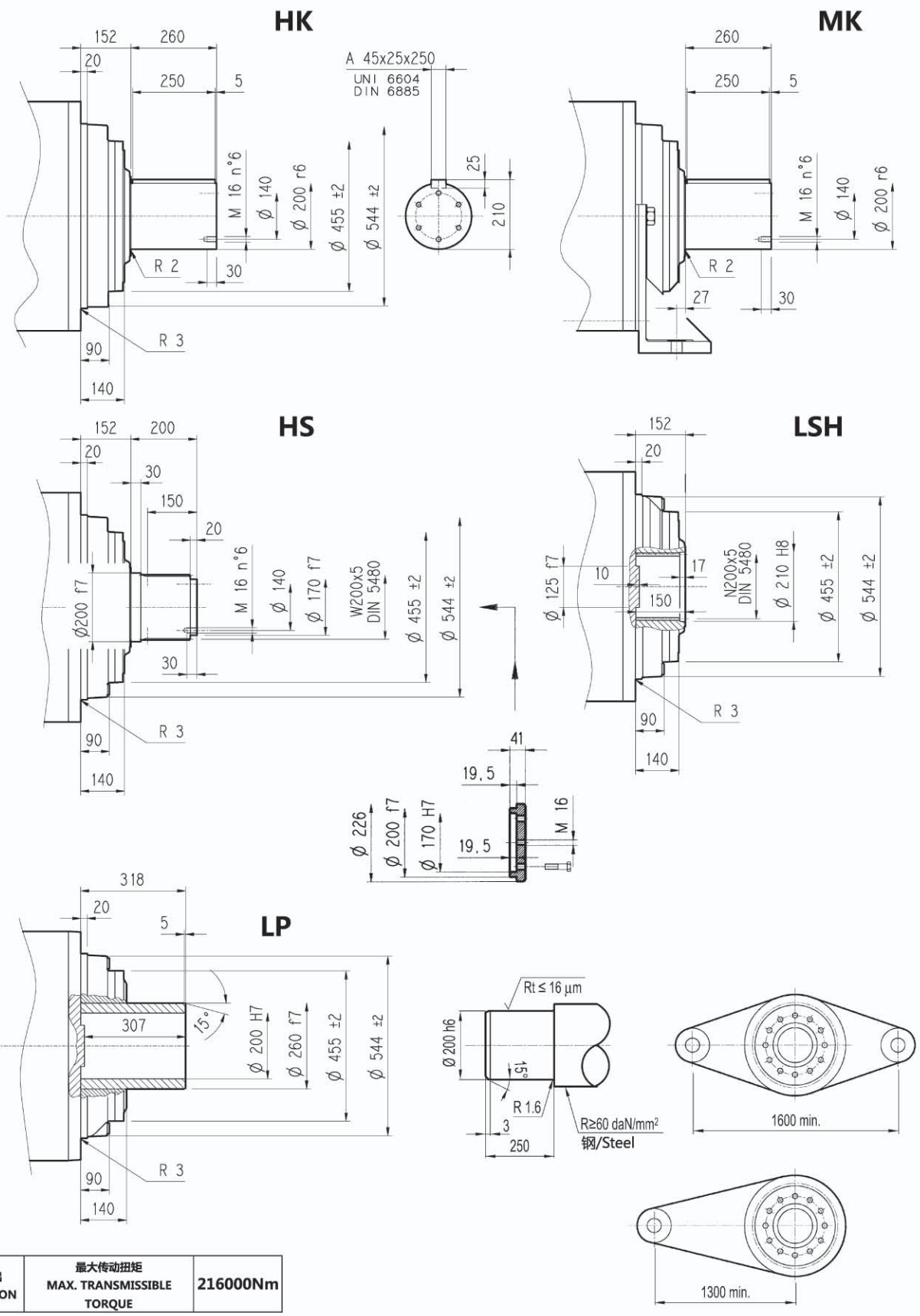

LP 输出 LP VERSION	最大传动扭矩 MAX. TRANSMISSIBLE TORQUE	216000Nm

GTN17 L - GTN17 R

法兰 / Flange

FOA



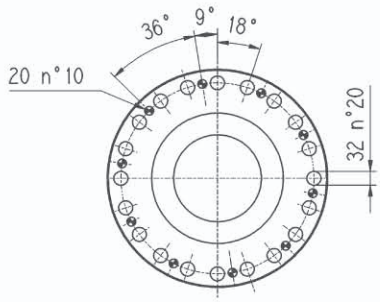

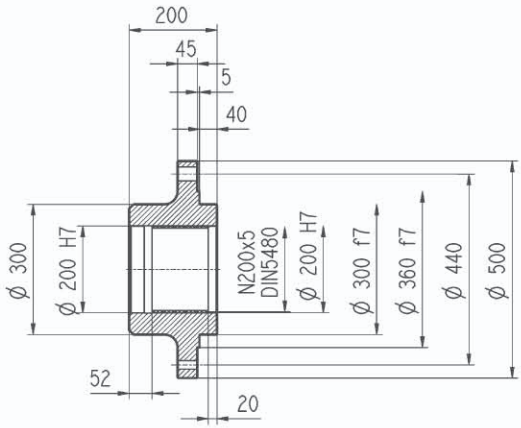

材料：C40
Material : Steel C40

套筒联轴器/Sleeve couplings

HOS



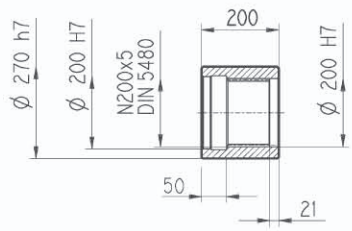

材料：16CrNi4
Material : Steel 16CrNi4

锁紧盘/Shrink disc

LOP



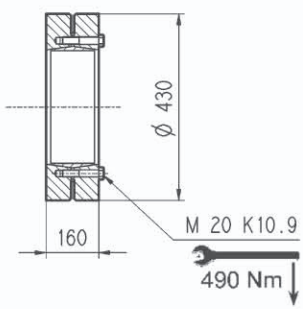

GTN17 L - GTN17 R

输入轴/Input shaft

S_ _

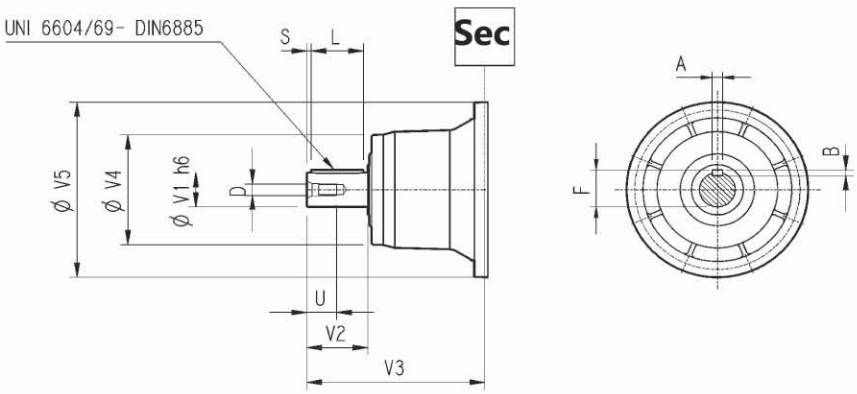

SV_ _

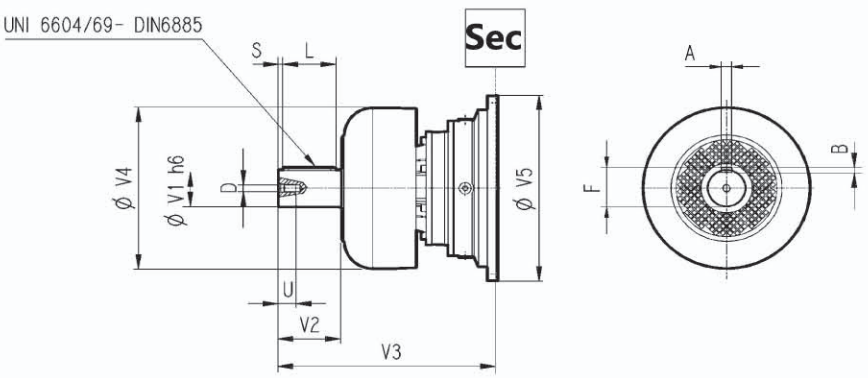

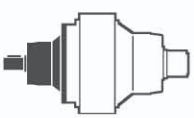

	CODE	V1	V2	V3	V4	V5	A	B	F	L	S	D	U
GTN17 L2	S11B	80	130	343	200	445	22	14	85	110	10	M16	36
	SV11B	80	130	451	347.5	445	22	14	85	110	10	M16	36
GTN17 L3	S07B	80	130	315	200	345	22	14	85	110	10	M16	36
	SV07B	80	130	375	347.5	348	22	14	85	110	10	M16	36
	S07A	60	105	313	155	345	18	11	64	90	7.5	M16	36
	SV07A	60	105	363	309	348	18	11	64	90	7.5	M16	36
GTN17 L4	S05B	48	82	239	155	245	14	9	51.5	70	6	M16	36
	SV05B	48	82	276	219.5	244	14	9	51.5	70	6	M16	36
GTN17 R4	S05B	48	82	239	155	245	14	9	51.5	70	6	M16	36
	SV05B	48	82	276	219.5	244	14	9	51.5	70	6	M16	36
GTN17 R3 (B) (C)	S06B	60	105	307	155	292	18	11	64	90	7.5	M16	36
	SV06B	60	105	357	309	292	18	11	64	90	7.5	M16	36

无电机适配器输入尺寸
Input dimension without motor adaptor

S_ _

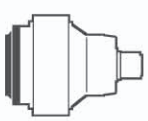

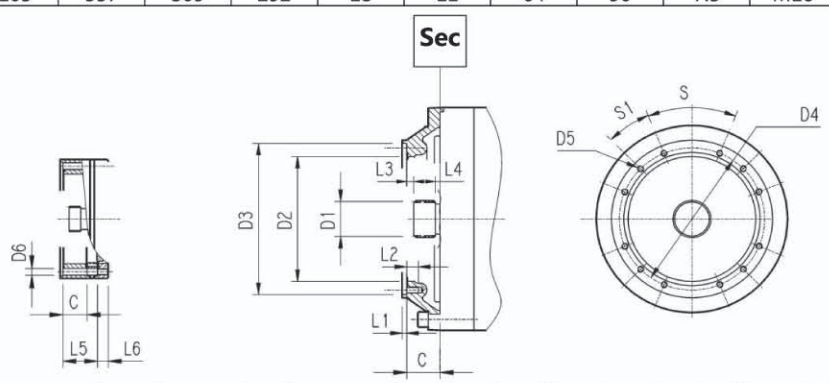

	CODE	C	D1	D2	D3	D4	D5	D6	L1	L2	L3	L4	L5	L6	S	S1	Input 输入
GTN17 L1	S9AF	181	120x3 DIN 5480	365	390 g7	415	M16 n°18	/	4	30	3	65	/	/	20°	20°	F
GTN17 L2	S9AD	75	80x74 DIN 5482	270	335 H7	314	M16 n°8	/	5	30	9.5	40	/	/	60°	30°	D
GTN17 L3	S9AB	51	58x53 DIN 5482	195	236 H7	222	M10 n°12	/	4	18	11	22	/	/	45°	22.5°	B
GTN17 L4	S9AA	37	40x36 DIN 5482	140	178 H7	165	M10 n°8	/	4	18	9	18	/	/	45°	45°	A
GTN17 R4	S9AA	37	40x36 DIN 5482	140	178 H7	165	M10 n°8	11	4	18	9	18	/	/	45°	45°	A
GTN17 R3 (B) (C)	S9AB	45	58x53 DIN 5482	195	236 H7	222	M10 n°12	/	4	18	11	22	/	/	45°	22.5°	B

GTN17 L - GTN17 R

Fh_2 输出轴允许的径向和轴向载荷
$n_2 \cdot h = 10000$

Permissible radial and axial loadson output shaft with Fh_2
$n_2 \cdot h = 10000$

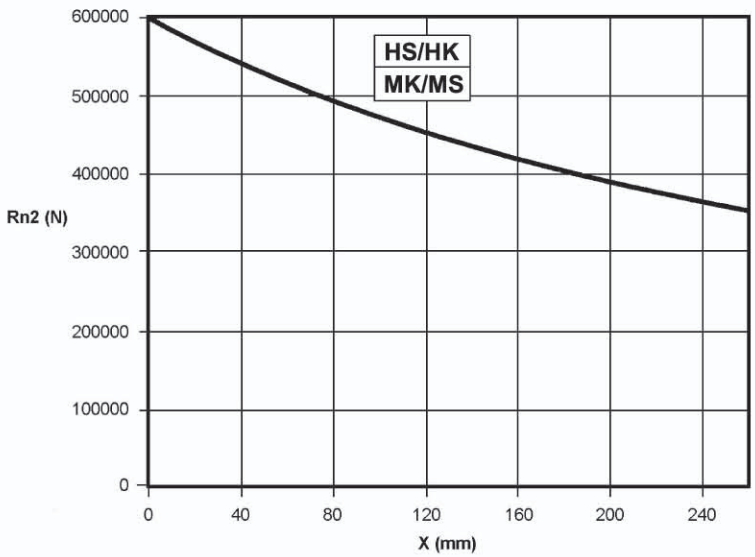

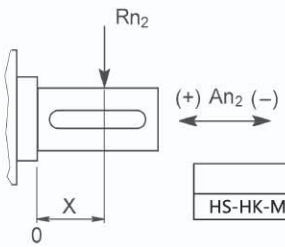

	An2 (+)	An2 (-)
HS-HK-MK-MS	360000	300000

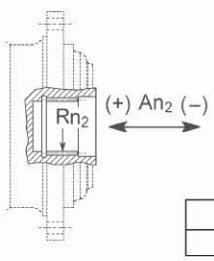

	Rn2	An2 (+/-)
LSH	150000	150000

轴上的载荷修正系数 fh_2 Load corrective factor fh_2 on shafts	$Fh_2 = n_2 \cdot h$		10000	25000	50000	100000	500000	1000000
	fh_2	LSH	1	0.74	0.58	0.46	0.27	0.21
		HS- HK- MK- MS	1	0.76	0.61	0.50	0.31	0.25

Fh_1 输入轴允许的径向和轴向载荷
$n_1 \cdot h = 250000$

Permissible radial loads on inputshaft with $Fh_1 : n_1 \cdot h = 250000$

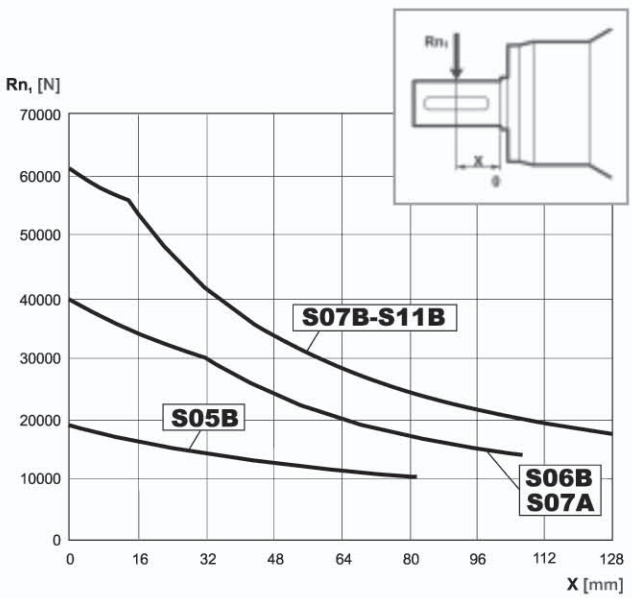

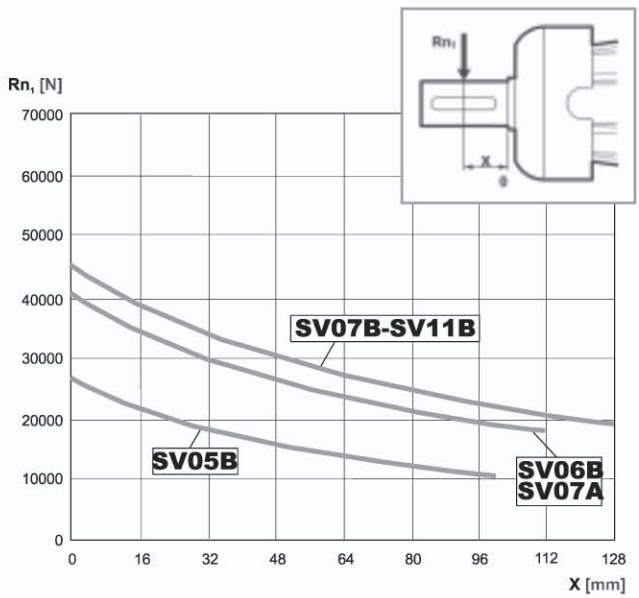

轴上的载荷修正系数fh_1 Load corrective factor fh_1 on shafts	$Fh_1 = n_1 \cdot h$	250000	500000	1000000	2000000	5000000	10000000
	fh_1	1	0.79	0.63	0.50	0.37	0.29

GTN18 L

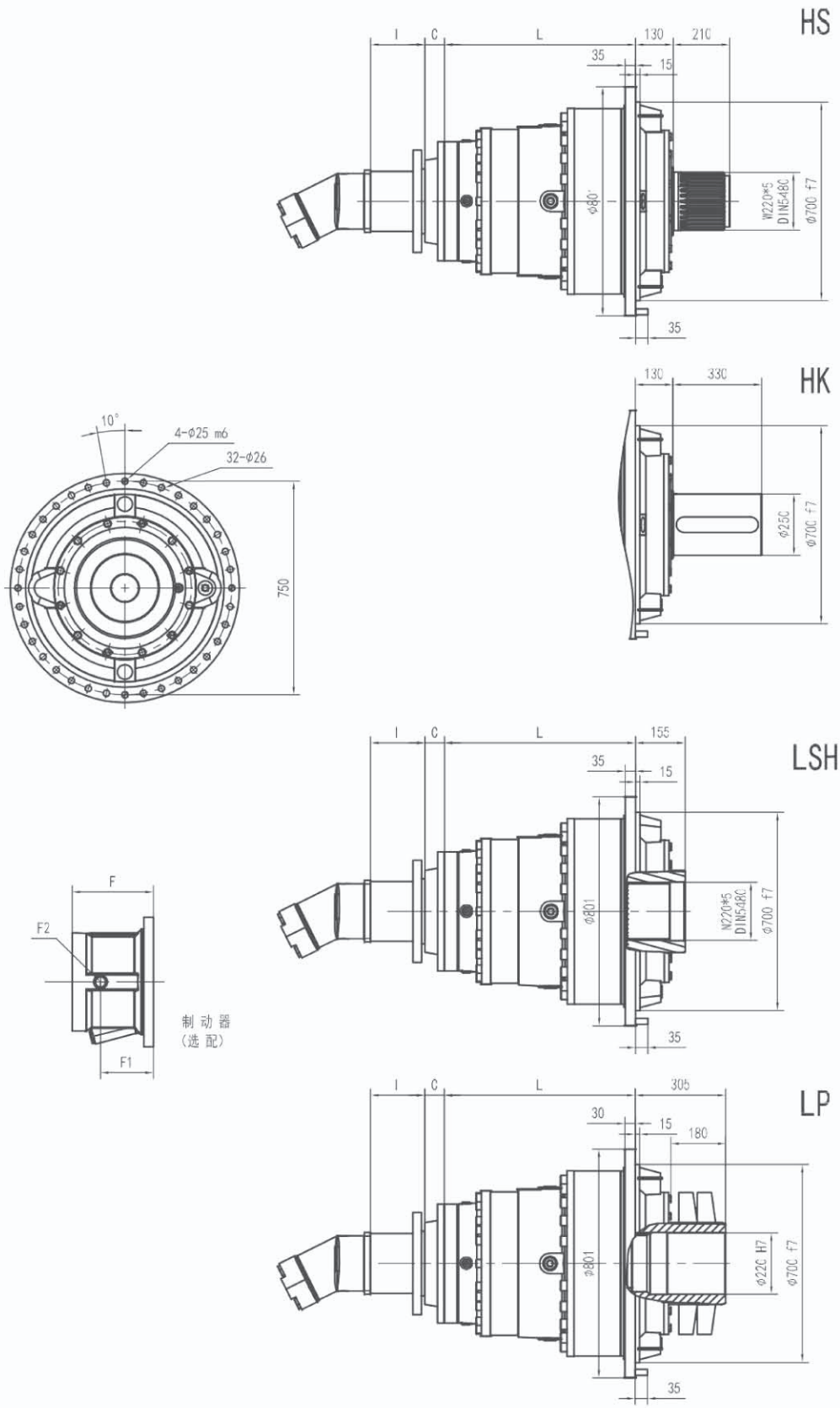
HS
I
C
L
130
210
35
15
35
HK
130
330
LSH
155
LP
305
30
180
10°
4-φ25 m6
32-φ26
750
F
F2
F1
制 动 器
（选 配）

GTN18 L

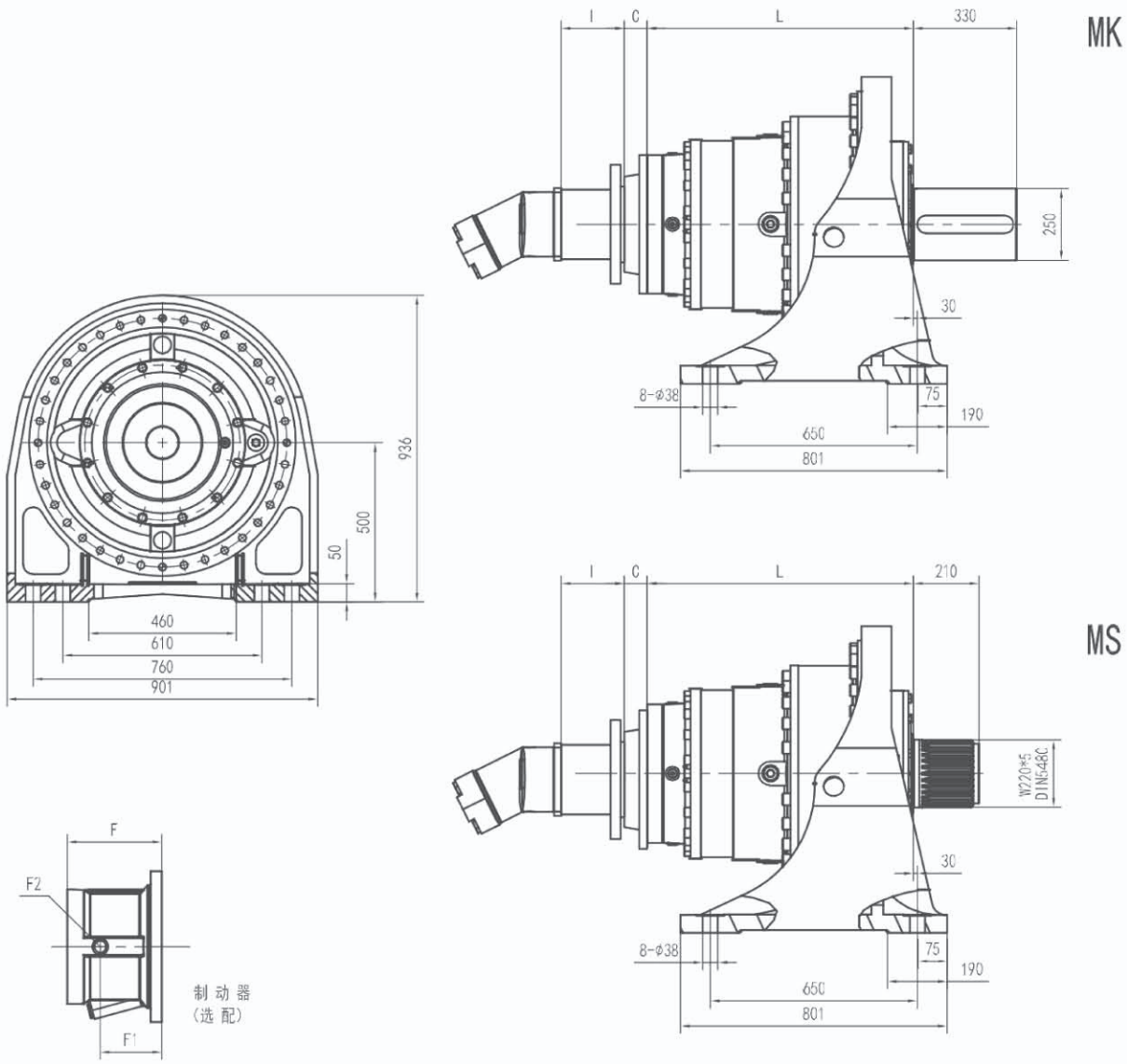

LP输出 LP VERSION	最大传动扭矩 MAX. TRANSMISSIBLE TORQUE	300000Nm

	L				Kg												
	HS HK	MK MS	LSH	LP	HS HK	MK MS	LSH	LP	C	输入 Input	I	F	F1	F2	类型 Type	输入 Input	Kg
GTN18 L1	202	332	202	202	950	1250	800	830	208	G	联系厂家						
GTN18 L2	547	677	547	547	1200	1500	1050	1080	116	E							
GTN18 L3	759	889	759	759	1300	1600	1150	1180	81	D		232	185	1/4G	6	B	28
GTN18 L4	892	1022	892	892	1350	1650	1200	1230	51	B		201	153	1/4 G	6	B	28

GTN18 L

HS

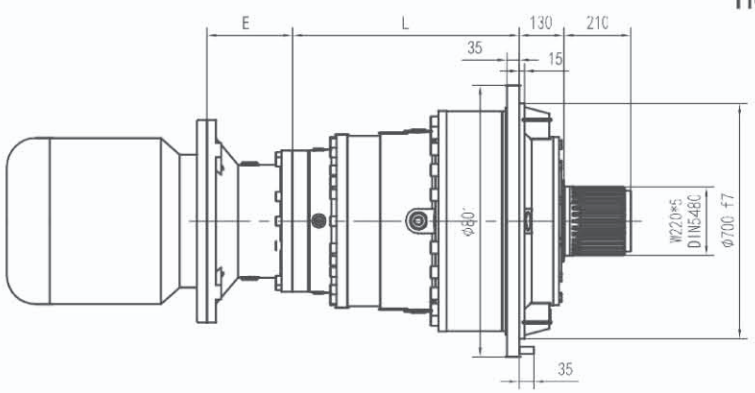

HK

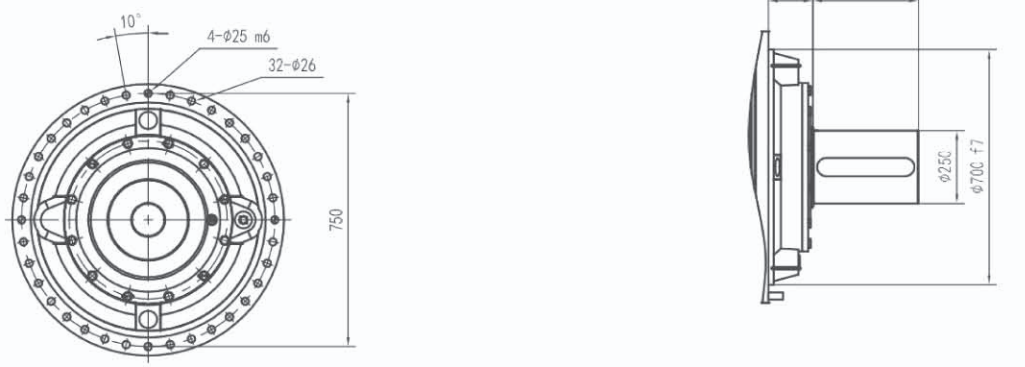

LSH

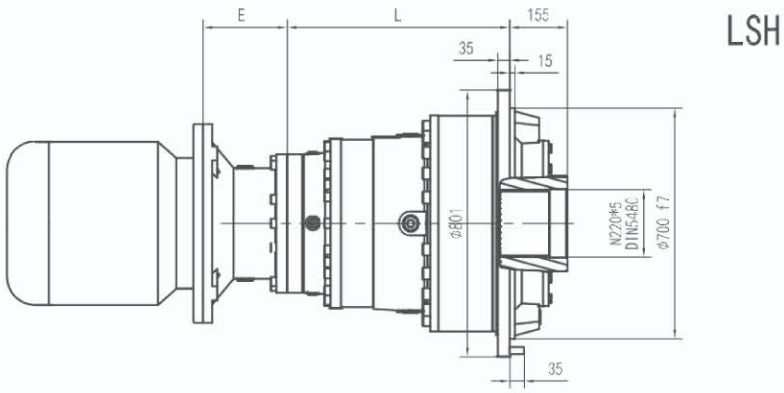

LP

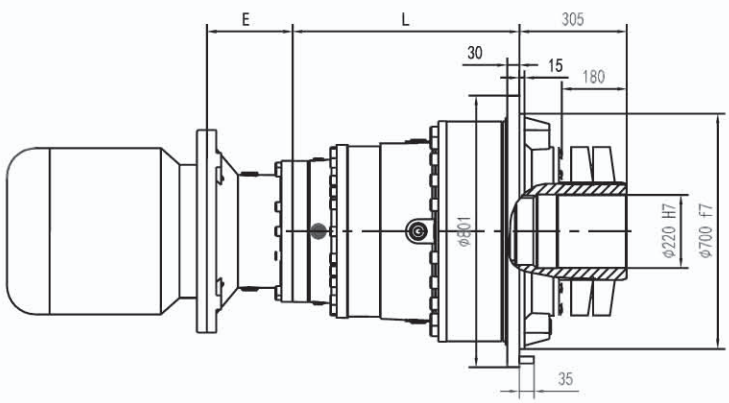

GTN18 L

MK

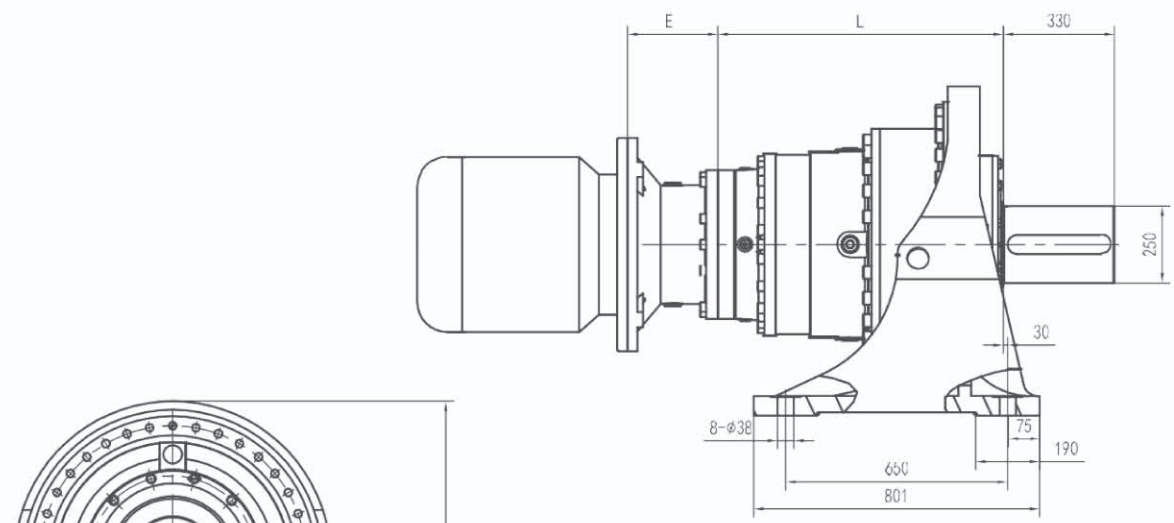

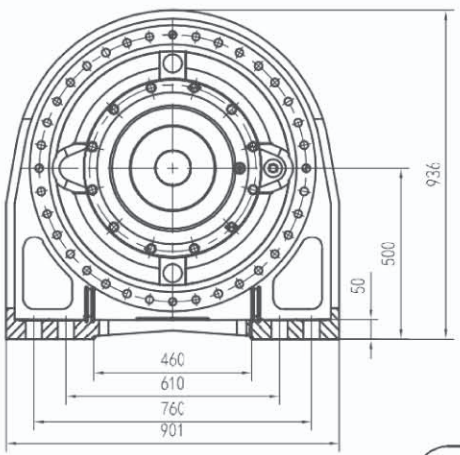

MS

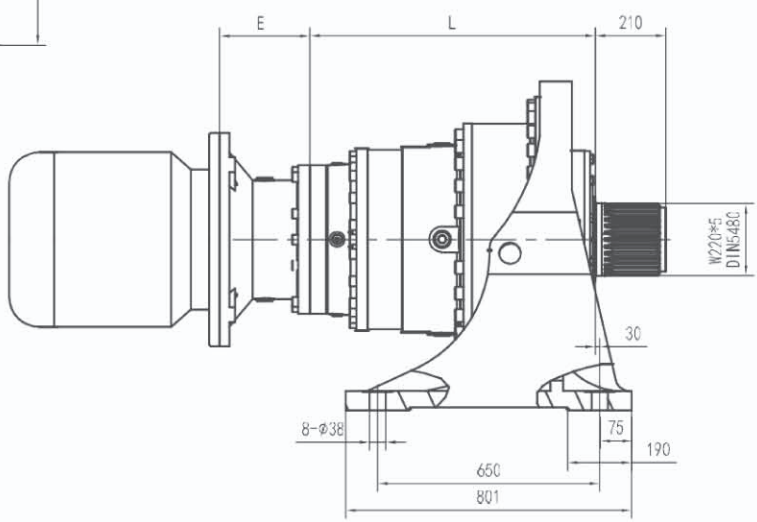

LP输出 LP VERSION	最大传动扭矩 MAX. TRANSMISSIBLE TORQUE	300000Nm

	L				Kg				E			
	HS HK	MK MS	LSH	LP	HS HK	MK MS	LSH	LP	IEC 180	IEC 200	IEC 225	IEC 250
GTN18 L1	202	332	202	202	950	1250	800	830				
GTN18 L2	547	677	547	547	1200	1500	1050	1080				
GTN18 L3	759	889	759	759	1300	1600	1150	1180				
GTN18 L4	892	1022	892	892	1350	1650	1200	1230	195	186	216	215

GTN18 L

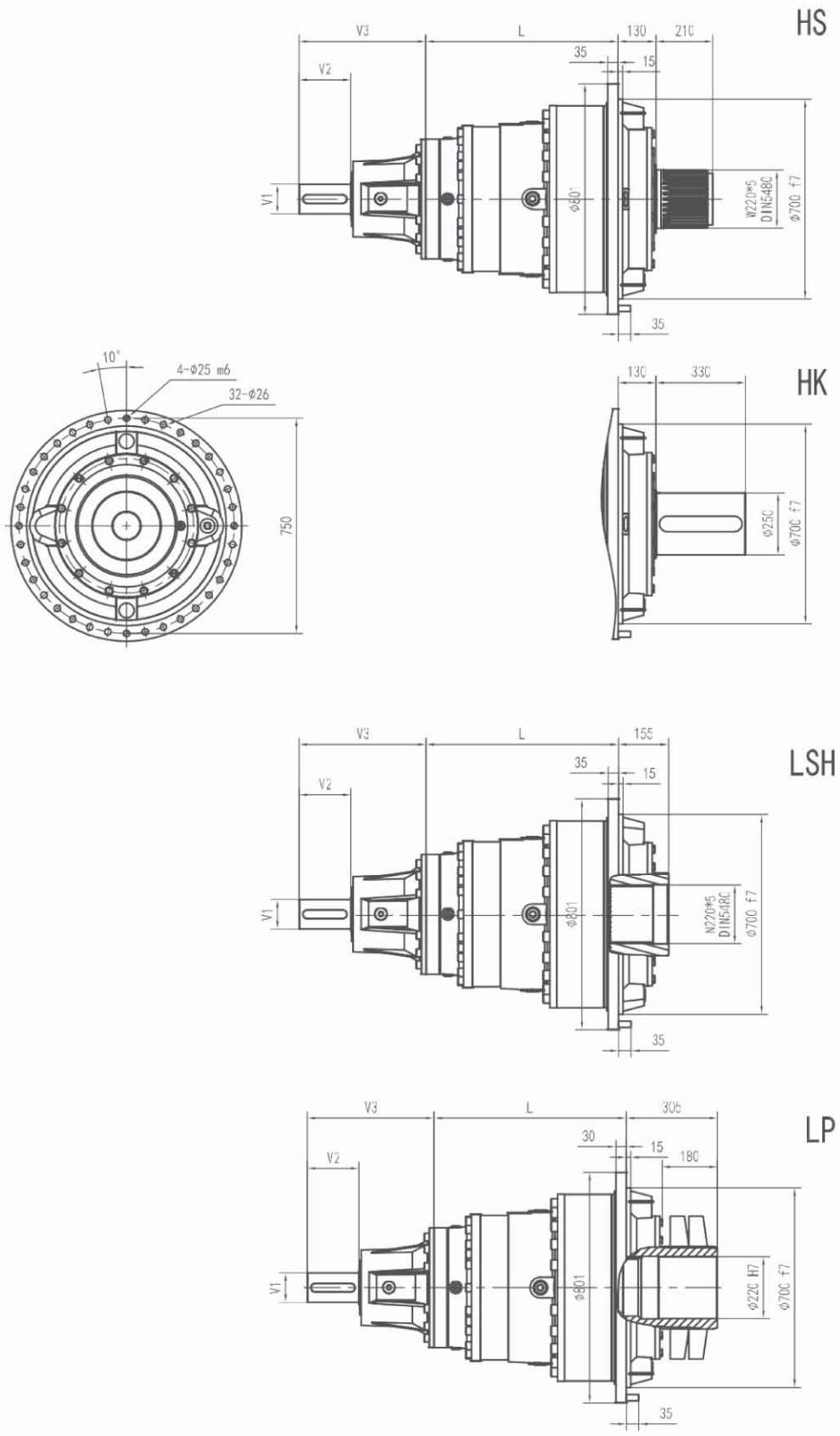
HS
V3
L
130
210
35
15
V2
V1
ø80
N220*5
DIN5480
ø700 f7
35
10°
4-ø25 m6
32-ø26
750
HK
130
330
ø250
ø700 f7
LSH
V3
L
155
35
15
V2
V1
ø801
N220*5
DIN5480
ø700 f7
35
LP
V3
L
305
30
15
180
V2
V1
ø801
ø220 N7
ø700 f7
35

GTN18 L

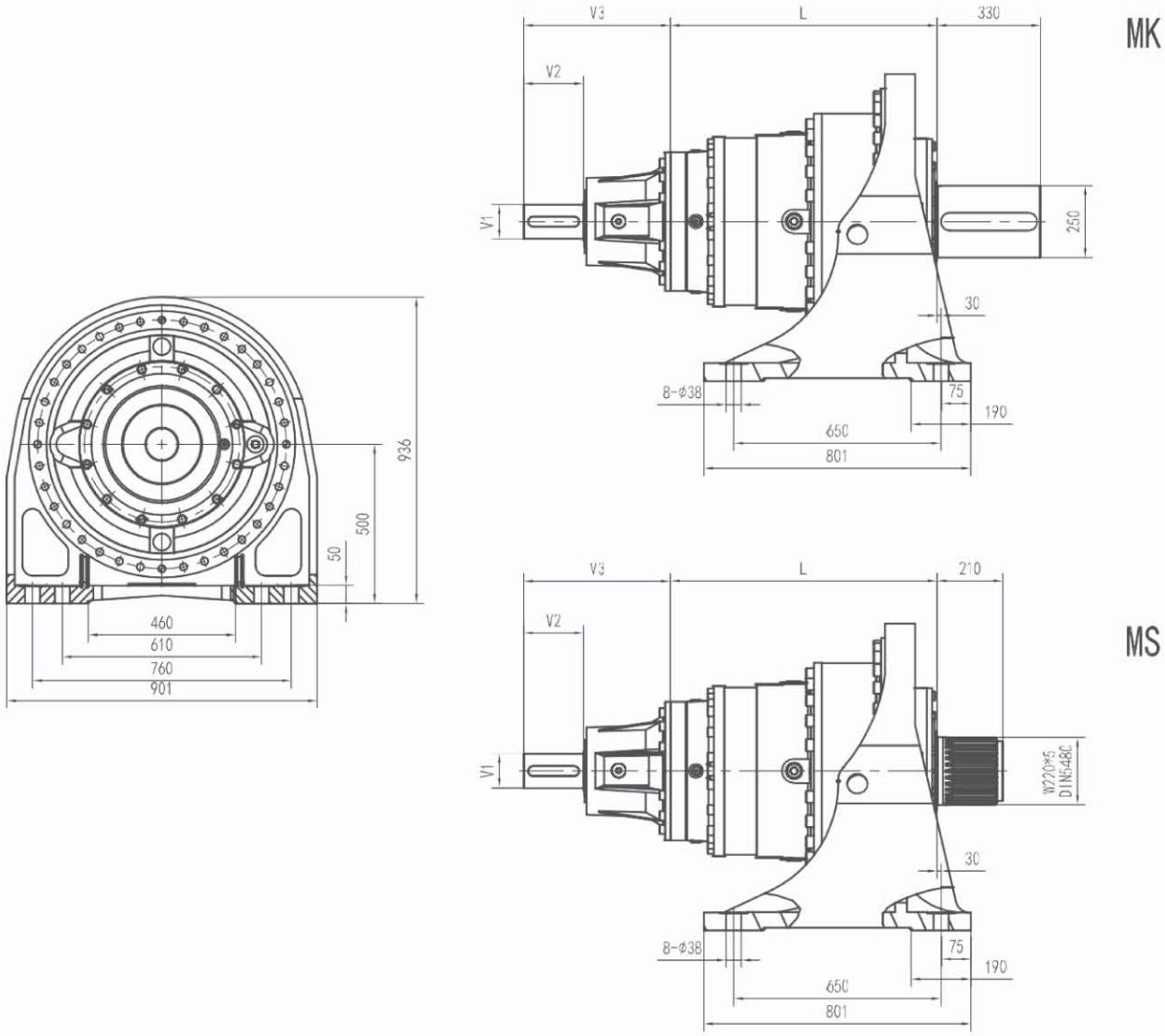

LP输出 LP VERSION	最大传动扭矩 MAX. TRANSMISSIBLE TORQUE	300000Nm

	L				Kg				V1	V2	V3	Kg	V1	V2	V3	Kg
	HS HK	MK MS	LSH	LP	HS HK	MK MS	LSH	LP								
GTN18 L1	202	332	202	202	950	1250	800	830								
GTN18 L2	547	677	547	547	1200	1500	1050	1080								
GTN18 L3	759	889	759	759	1300	1600	1150	1180	80	130	348	35				
GTN18 L4	892	1022	892	892	1350	1650	1200	1230	80	130	315	35	60	105	313	28

GTN18 R

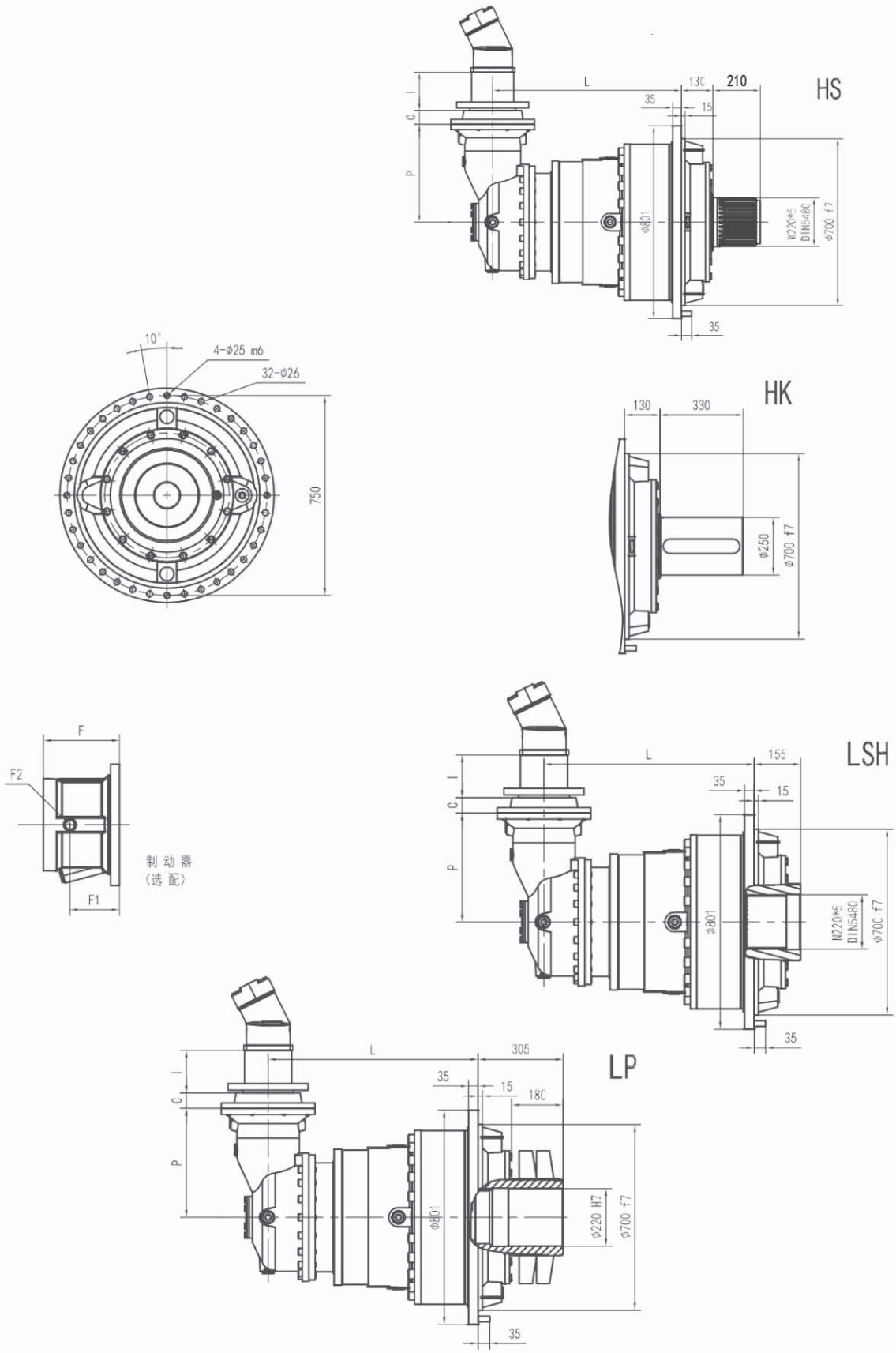
HS
L
130
210
35
15
I
C
P
Φ801
W220*5
DIN5480
Φ700 f7
35
10°
4-Φ25 m6
32-Φ26
750
HK
130
330
Φ250
Φ700 f7
F
F2
F1
制 动 器
(选 配)
LSH
L
155
35
15
I
C
P
Φ801
N220*5
DIN5480
Φ700 f7
35
LP
L
305
35
15
180
I
C
P
Φ801
Φ220 H7
Φ700 f7
35

GTN18 R

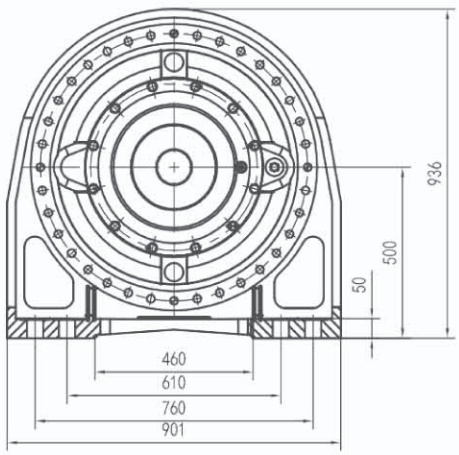

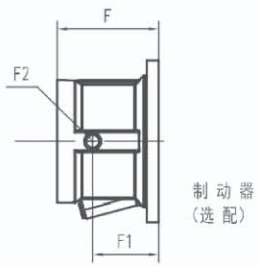

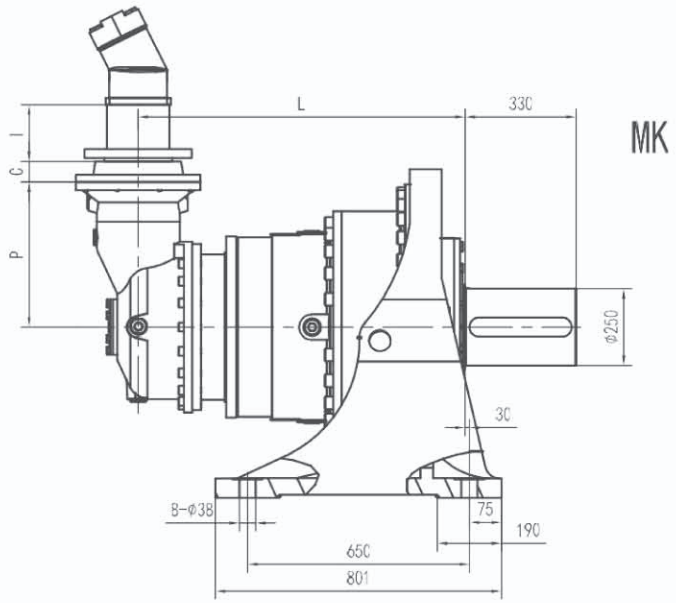

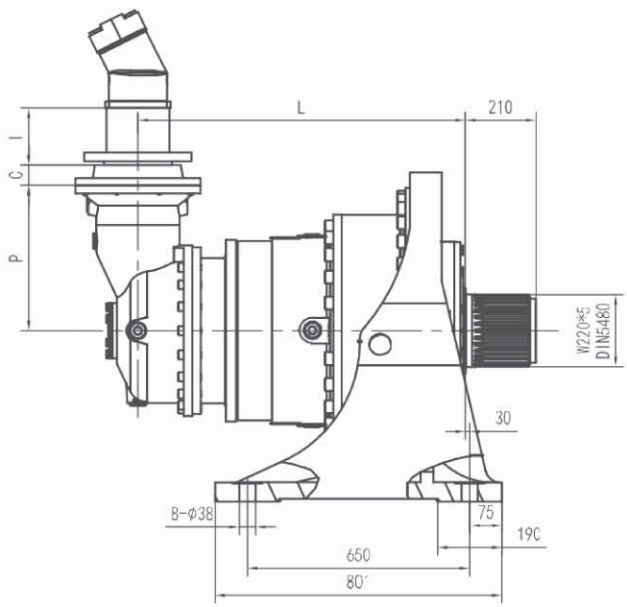

LP输出 LP VERSION	最大传动扭矩 MAX. TRANSMISSIBLE TORQUE	300000Nm

	L				P	Kg				C	输入 Input	I	F	F1	F2	类型 Type	输入 Input	Kg
	HS HK	MK MS	LSH	LP		HS HK	MK MS	LSH	LP									
GTN18 R4(B)	985	1115	985	985	345	1420	1720	1270	1300	45	B	联系	195	147	1/4G	6	B	28
GTN18 R4(C)	985	1115	985	985	390	1430	1730	1280	1310	45	B	厂家	195	147	1/4G	6	B	28

GTN18 R

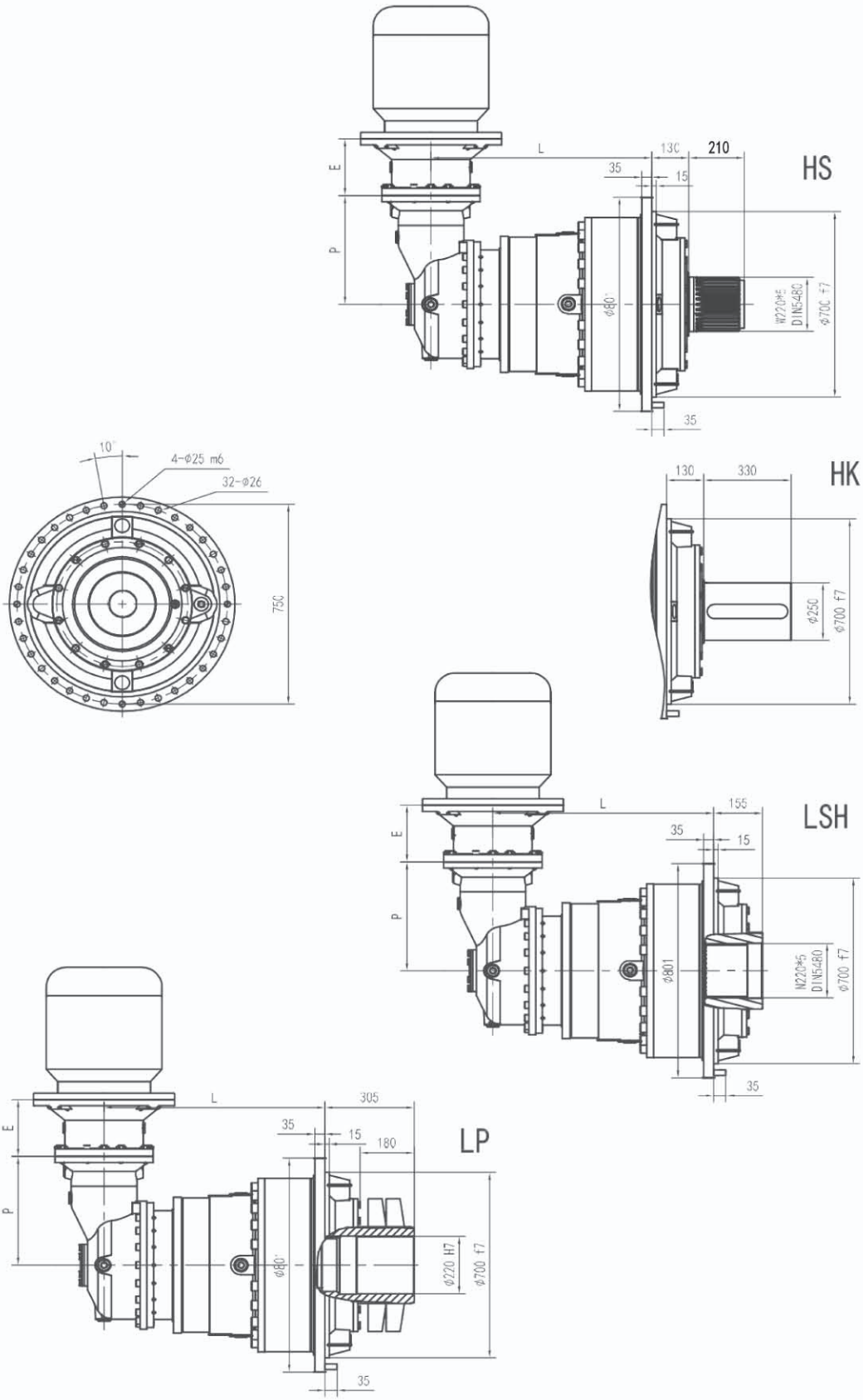
HS
L
130
210
35
15
E
P
Φ80
W220*5
DIN5480
Φ700 f7
35
HK
130
330
Φ250
Φ700 f7
10°
4-Φ25 m6
32-Φ26
750
LSH
L
155
35
15
E
P
Φ801
N220*5
DIN5480
Φ700 f7
35
LP
L
305
35
15
180
E
P
Φ80
Φ220 H7
Φ700 f7
35

GTN18 R

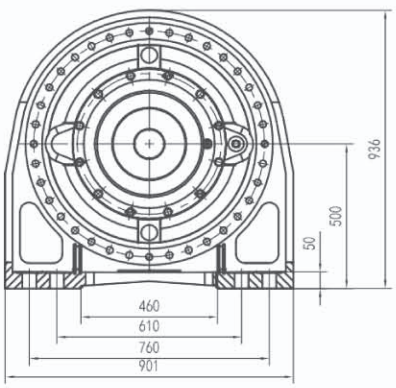

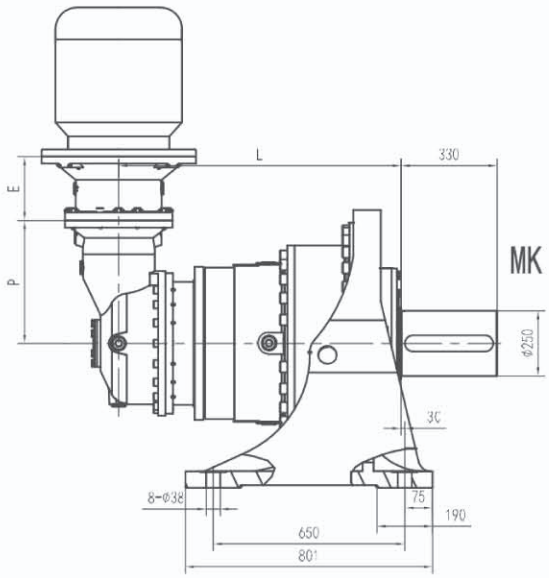

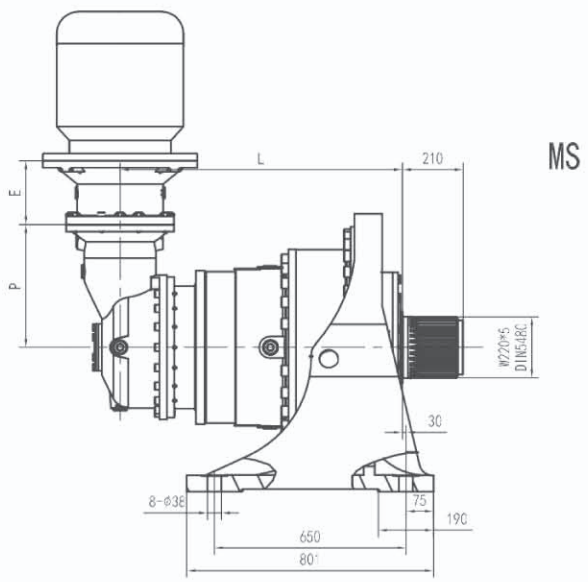

LP输出 LP VERSION	最大传动扭矩 MAX. TRANSMISSIBLE TORQUE	300000Nm

	L				P	Kg				E			
	HS HK	MK MS	LSH	LP		HS HK	MK MS	LSH	LP	IEC 180	IEC 200	IEC 225	IEC 250
GTN18 R4(B)	985	1115	985	985	345	1420	1720	1270	1300	152	182	212	193
GTN18 R4(C)	985	1115	985	985	390	1430	1730	1280	1310	152	182	212	193

GTN18 R

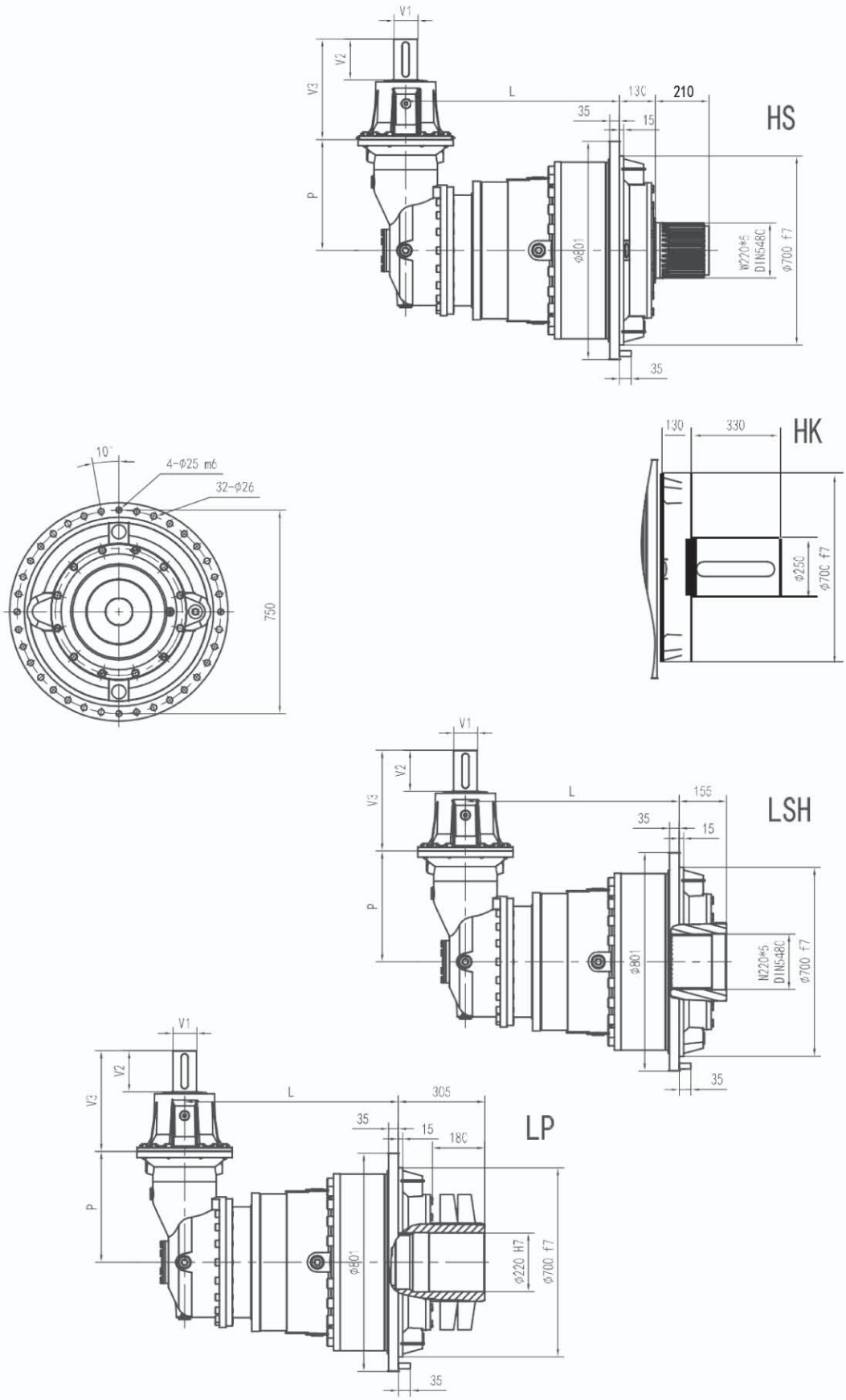
V1
V2
V3
L
130
210
35
15
HS
P
φ801
W220*5
DIN5480
φ700 f7
35
10°
4-φ25 m6
32-φ26
750
130
330
HK
φ250
φ700 f7
V1
V2
V3
L
155
35
15
LSH
P
φ801
N220*5
DIN5480
φ700 f7
35
V1
V2
V3
L
305
35
15
180
LP
P
φ801
φ220 H7
φ700 f7
35

GTN18 R

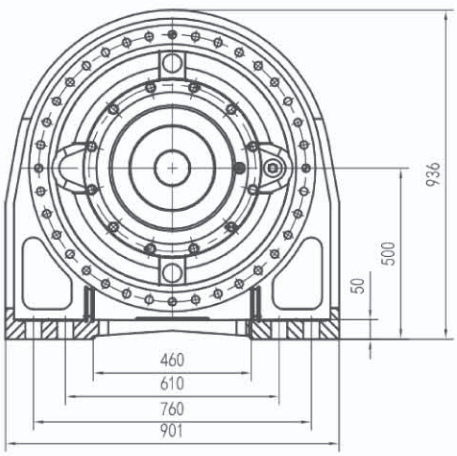

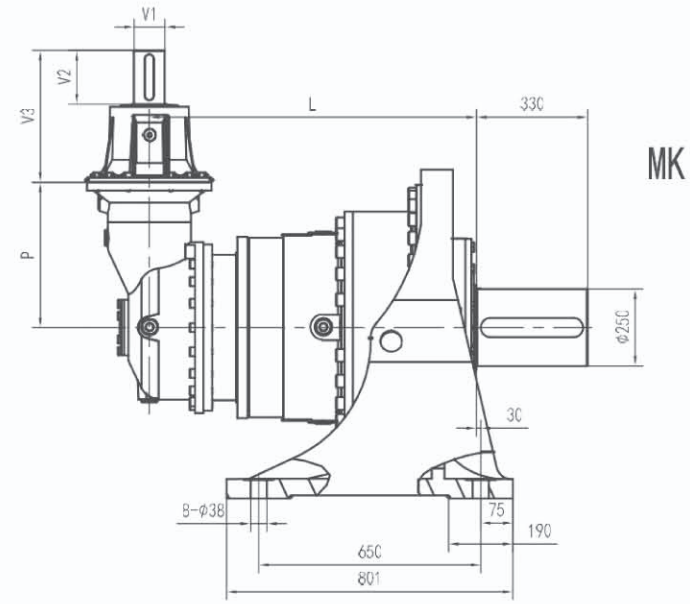

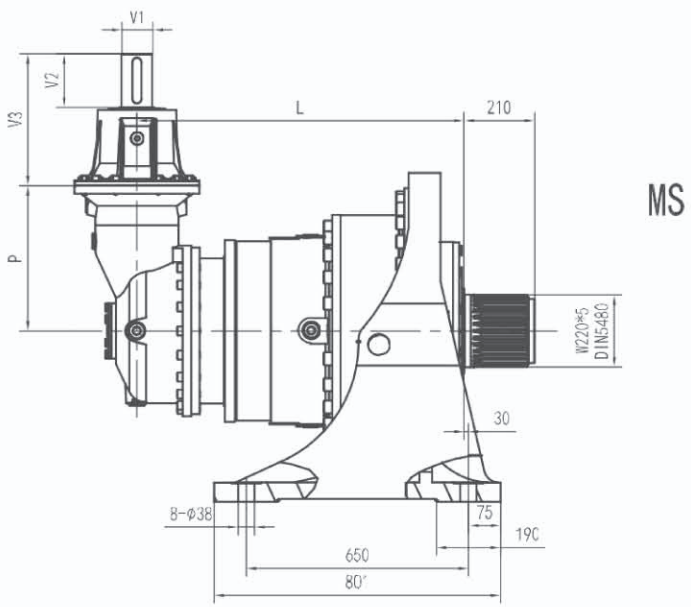

LP输出 LP VERSION	最大传动扭矩 MAX. TRANSMISSIBLE TORQUE	300000Nm

	L				P	Kg				V1	V2	V3	Kg	V1	V2	V3	Kg
	HS HK	MK MS	LSH	LP		HS HK	MK MS	LSH	LP								
GTN18 R4(B)	985	1115	985	985	345	1420	1720	1270	1300	60	105	307	23				
GTN18 R4(C)	985	1115	985	985	390	1430	1730	1280	1310	60	105	307	23				

GTN18 L - GTN18 R

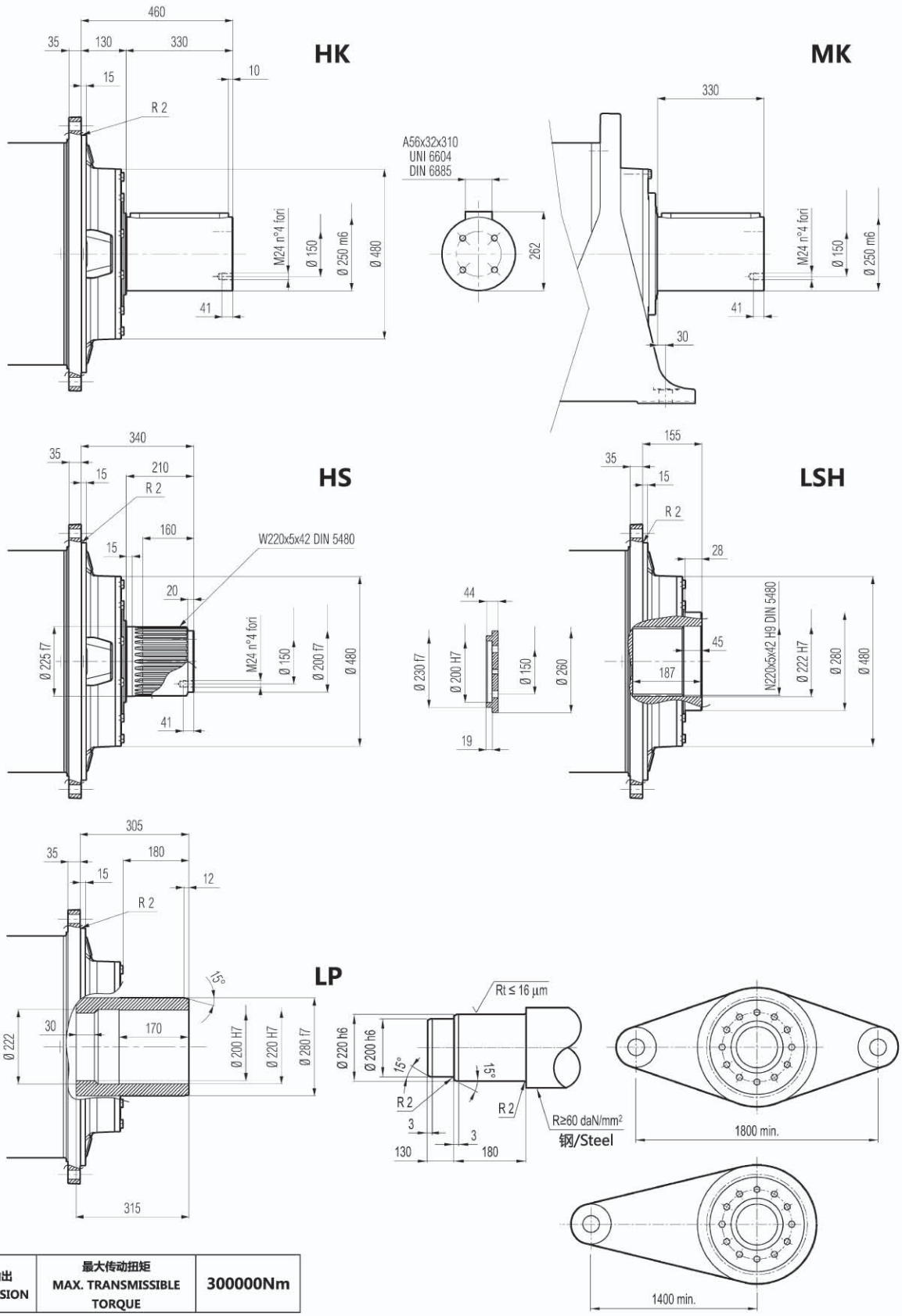

LP输出 LP VERSION	最大传动扭矩 MAX. TRANSMISSIBLE TORQUE	300000Nm

GTN18 L - GTN18 R

法兰/Flange

FOA



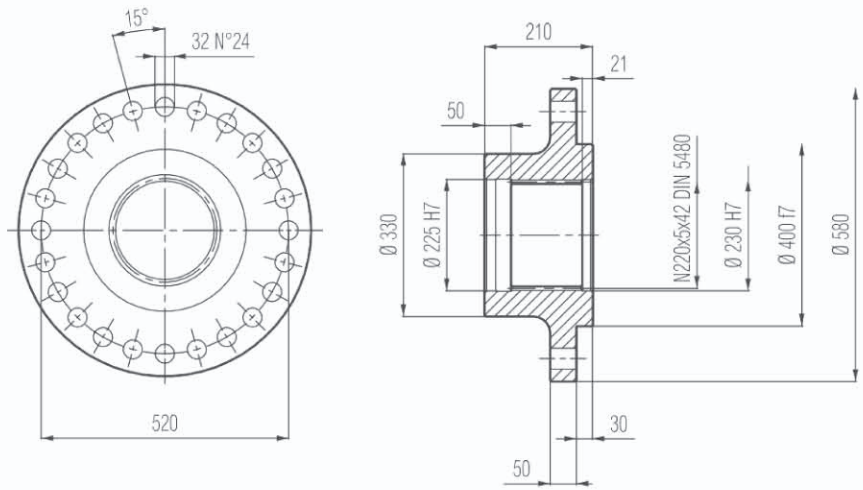

材料：C40
Material : Steel C40

套筒联轴器/Sleeve couplings

HOS



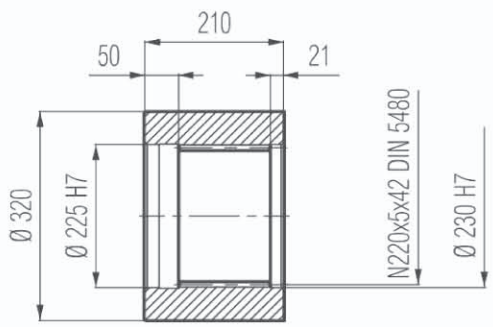

材料：16CrNi4
Material: Steel 16CrNi4

锁紧盘/Shrink disc

LOP



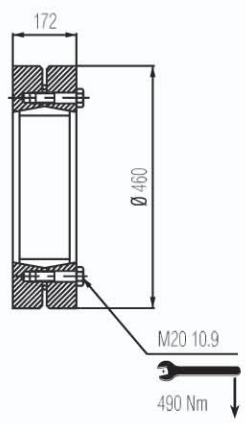

GTN18 L - GTN18 R

输入轴/Input shaft

S_ _

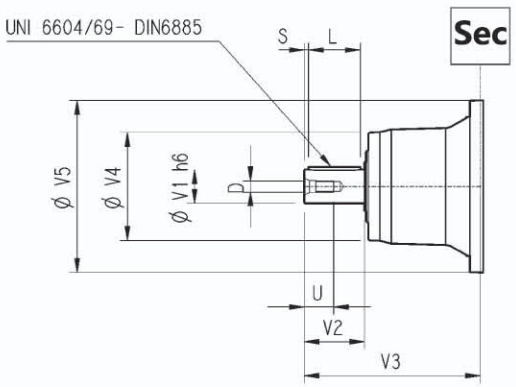

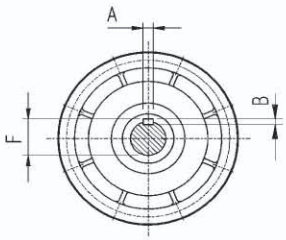

SV_ _

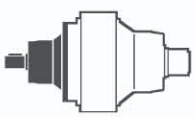

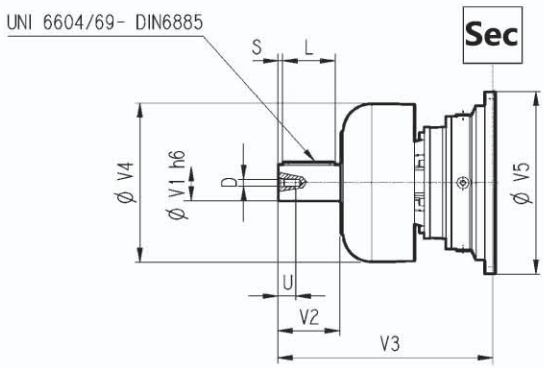

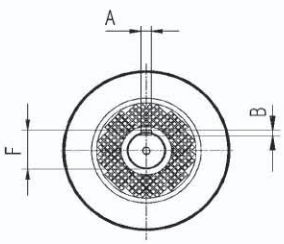

	CODE	V1	V2	V3	V4	V5	A	B	F	L	S	D	U
GTN18 L3	S11B	80	130	348	200	428	22	14	85	110	10	M16	36
	SV11B	80	130	456	347.5	428	22	14	85	110	10	M16	36
GTN18 L4	S07B	80	130	315	200	345	22	14	85	110	10	M16	36
	SV07B	80	130	375	347.5	348	22	14	85	110	10	M16	36
	S07A	60	105	313	155	345	18	11	64	90	7.5	M16	36
	SV07A	60	105	363	309	348	18	11	64	90	7.5	M16	36
GTN18 R4 (B) (C)	S06B	60	105	307	155	292	18	11	64	90	7.5	M16	36
	SV06B	60	105	307	155	292	18	11	64	90	7.5	M16	36

无电机适配器输入尺寸
Input dimension without motor adaptor

S_ _

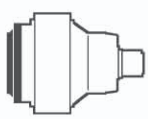

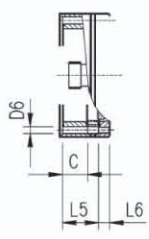

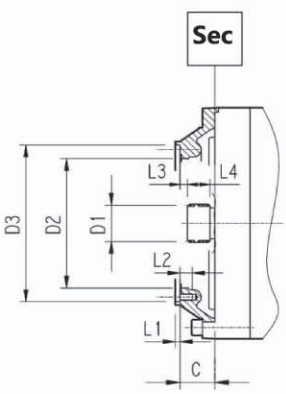

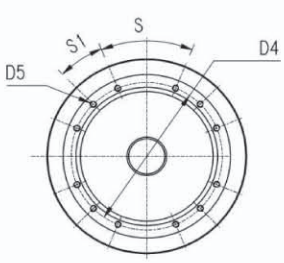

	CODE	C	D1	D2	D3	D4	D5	D6	L1	L2	L3	L4	L5	L6	S	S1	Input 输入
GTN18 L1	请咨询技术部／Please consult Technical Service																
GTN18 L2	S9AE	116	100x94 DIN 5482	340	412 H7	390	M16 n° 18	/	7	30	8	55	/	/	20°	20°	E
GTN18 L3	S9AD	81	80x74 DIN 5482	270	335 H7	314	M16 n° 8	/	5	30	8.5	40	/	/	60°	30°	D
GTN18 L4	S9AB	51	58x53 DIN 5482	195	236 H7	222	M16 n° 12	/	4	18	11	22	/	/	45°	22.5°	B
GTN18 R4 (B) (C)	S9AB	45	58x53 DIN 5482	195	236 H7	222	M10 n° 10	/	4	18	11	22	/	/	45°	22.5°	B

GTN18 L - GTN18 R

Fh_2 输出轴允许的径向和轴向载荷
$n_2 \cdot h = 10000$

Permissible radial and axial loadson output shaft with Fh_2
$n_2 \cdot h = 10000$

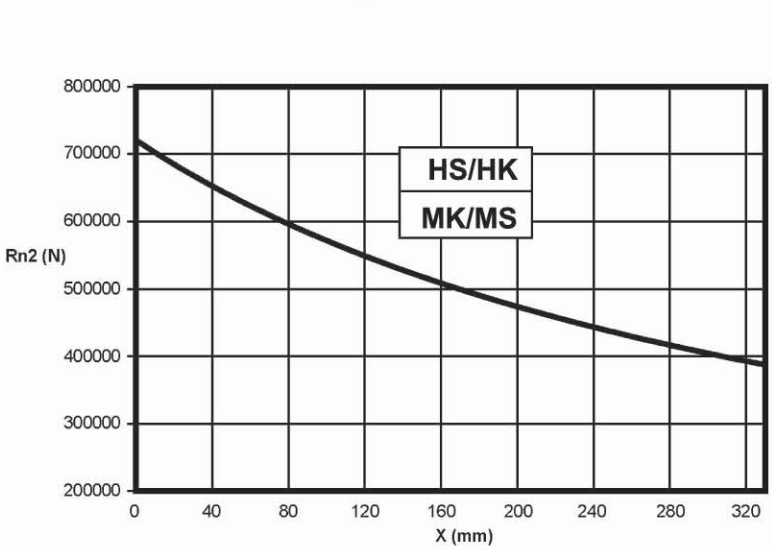

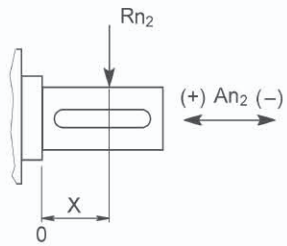

	An2 (+)	An2 (-)
HS-HK-MK-MS	500000	450000

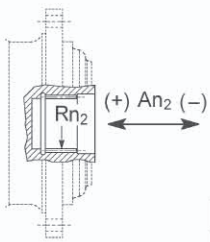

	Rn2	An2 (+/-)
LSH	200000	200000

轴上的载荷修正系数 fh_2 Load corrective factor fh_2 on shafts	$Fh_2 = n_2 \cdot h$		10000	25000	50000	100000	500000	1000000
	fh_2	LSH	1	0.74	0.58	0.46	0.27	0.21
		HS-HK-MK-MS	1	0.76	0.61	0.50	0.31	0.25

Fh_1 输入轴允许的径向和轴向载荷
$n_1 \cdot h = 250000$

Permissible radial loads on inputshaft with Fh_1 : $n_1 \cdot h = 250000$

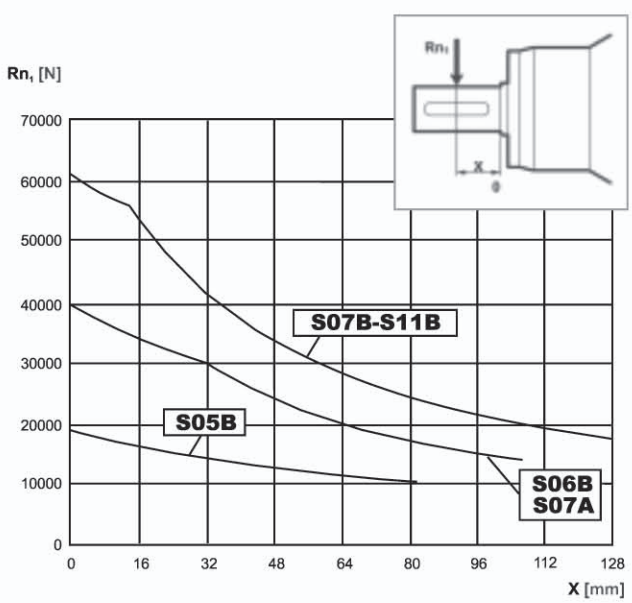

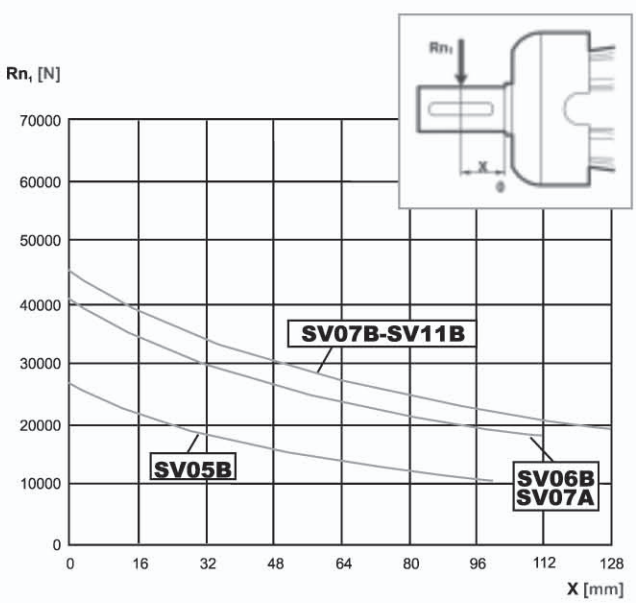

轴上的载荷修正系数fh_1 Load corrective factor fh_1 on shafts	$Fh_1 = n_1 \cdot h$	250000	500000	1000000	2000000	5000000	10000000
	fh_1	1	0.79	0.63	0.50	0.37	0.29

GTN19 L

HS

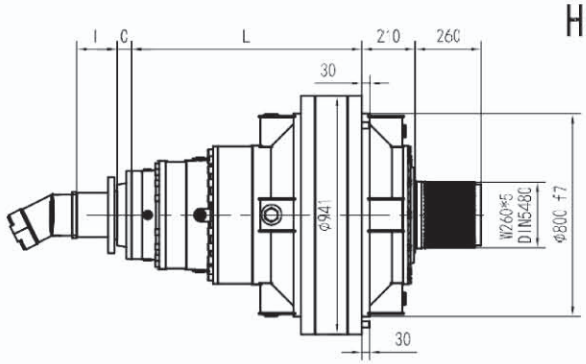

HK



LSH

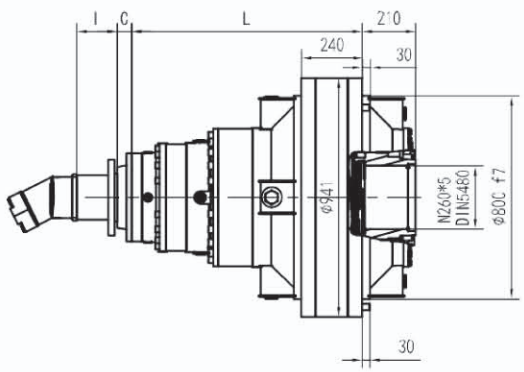

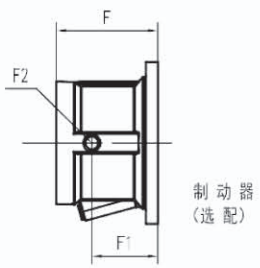

LP

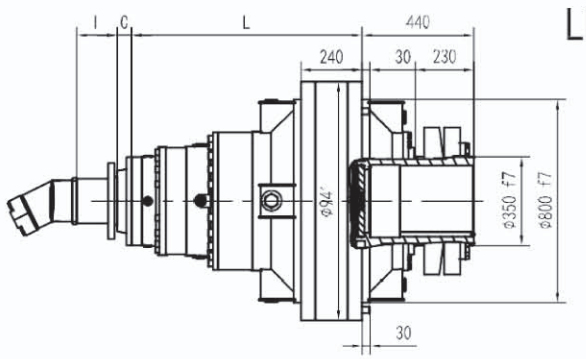

GTN19 L

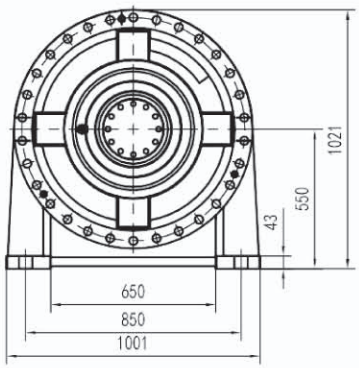

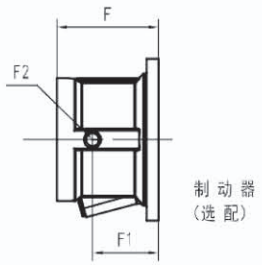

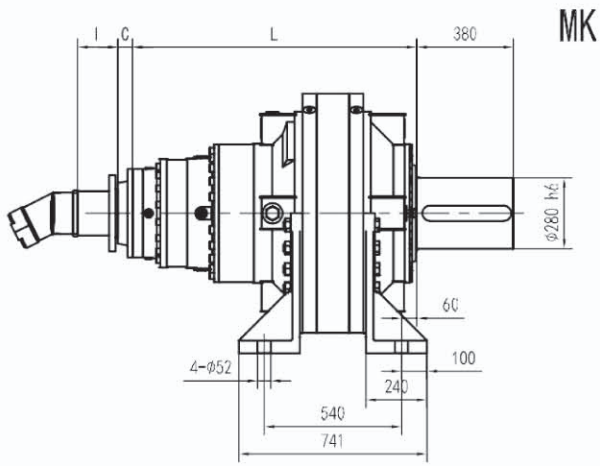

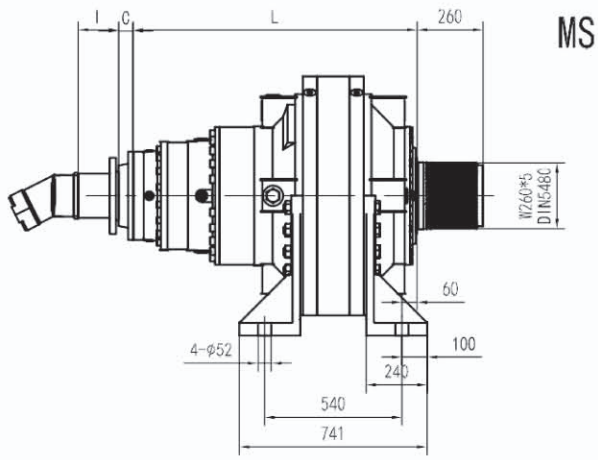

LP输出 LP VERSION	最大传动扭矩 MAX. TRANSMISSIBLE TORQUE	420000Nm

	L				Kg												
	HS HK	MK MS	LSH	LP	HS HK	MK MS	LSH	LP	C	输入 Input	I	F	F1	F2	类型 Type	输入 Input	Kg
GTN19 L1	185	395	185	185	1800	2100	1700	1700	245	G	联系厂家						
GTN19 L2	568	778	568	568	2050	2350	1950	1950	116	E							
GTN19 L3	780	990	780	780	2135	2435	2035	2035	81	D		232	185	1/4G	6	B	28
GTN19 L4	913	1123	913	913	2180	2480	2080	2080	51	B		201	153	1/4 G	6	B	28

GTN19 L

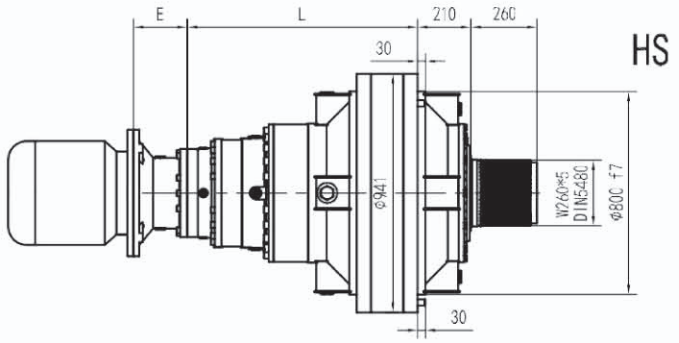
E
L
210
260
30
HS
Φ941
W260*5
DIN5480
Φ800 f7
30

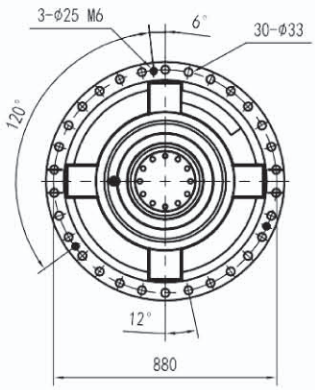
3-Φ25 M6
6°
30-Φ33
120°
12°
880

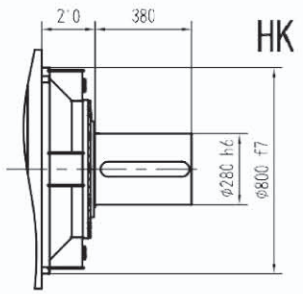
210
380
HK
Φ280 h6
Φ800 f7

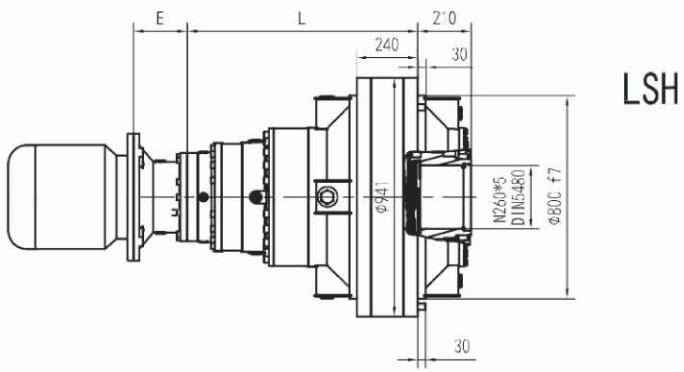
E
L
210
240
30
LSH
Φ941
N260*5
DIN5480
Φ800 f7
30

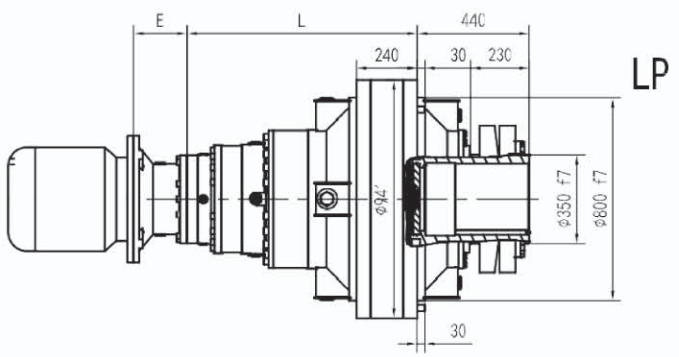
E
L
440
240
30
230
LP
Φ942
Φ350 f7
Φ800 f7
30

GTN19 L

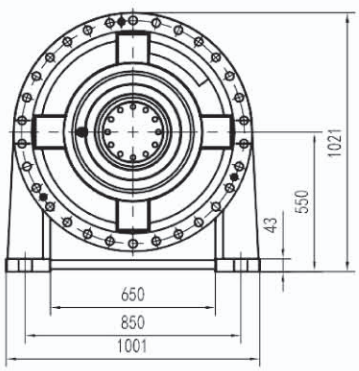

MK

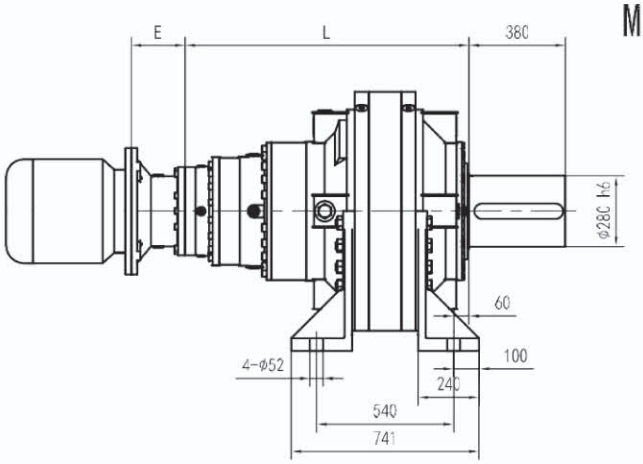

MS

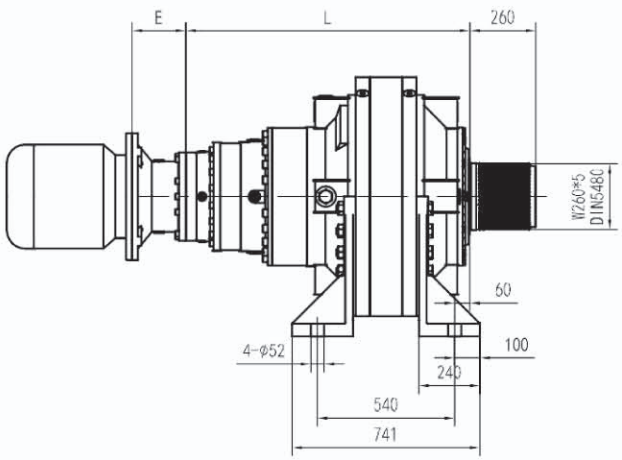

LP输出 LP VERSION	最大传动扭矩 MAX. TRANSMISSIBLE TORQUE	420000Nm

	L				Kg				E			
	HS HK	MK MS	LSH	LP	HS HK	MK MS	LSH	LP	IEC 180	IEC 200	IEC 225	IEC 250
GTN19 L1	185	395	185	185	1800	2100	1700	1700				
GTN19 L2	568	778	568	568	2050	2350	1950	1950				
GTN19 L3	780	990	780	780	2135	2435	2035	2035				
GTN19 L4	913	1123	913	913	2180	2480	2080	2080	195	186	216	215

GTN19 L

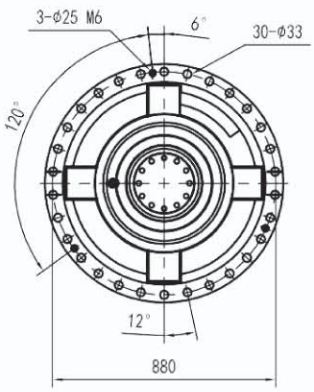

HS

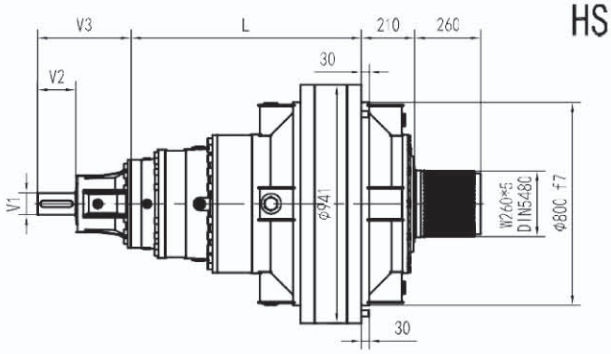

HK

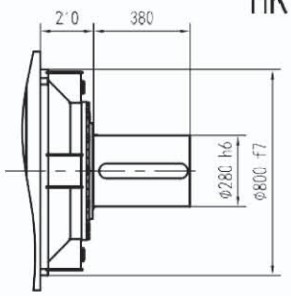

LSH

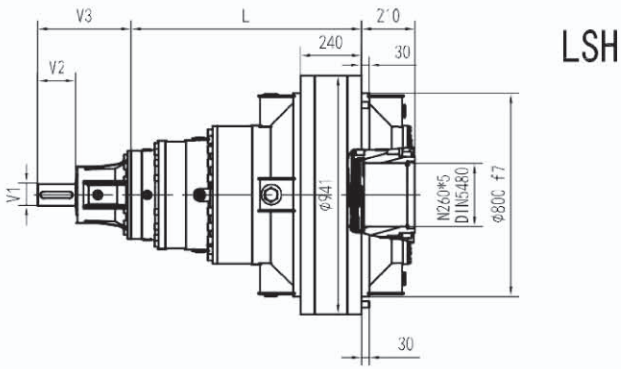

LP

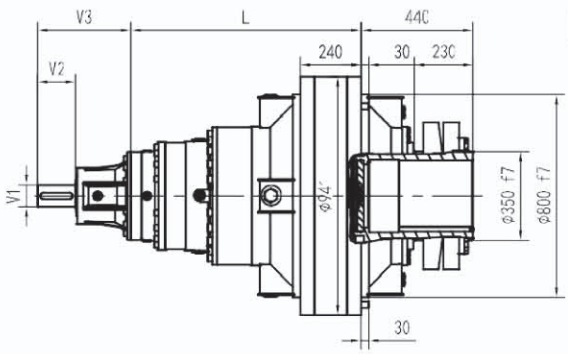

GTN19 L

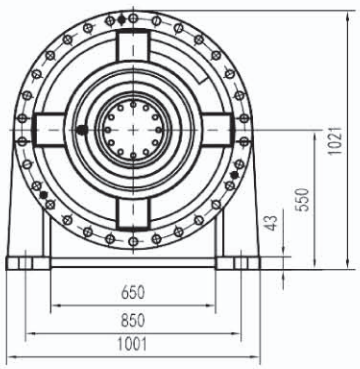

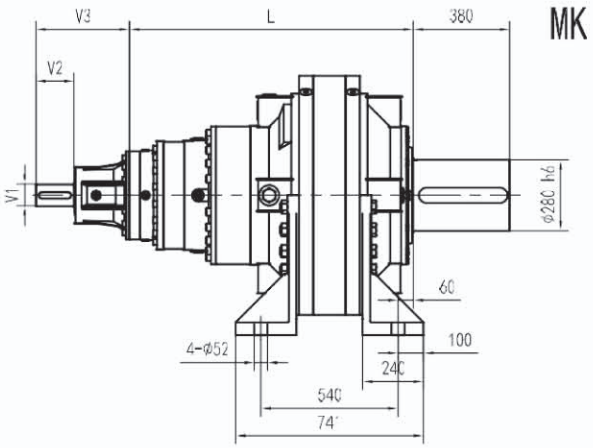

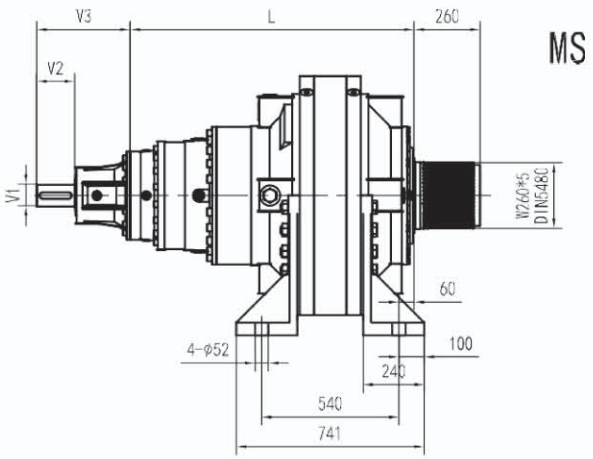

LP输出 LP VERSION	最大传动扭矩 MAX. TRANSMISSIBLE TORQUE	420000Nm

	L				Kg				V1	V2	V3	Kg	V1	V2	V3	Kg
	HS HK	MK MS	LSH	LP	HS HK	MK MS	LSH	LP								
GTN19 L1	185	395	185	185	1800	2100	1700	1700								
GTN19 L2	568	778	568	568	2050	2350	1950	1950								
GTN19 L3	780	990	780	780	2135	2435	2035	2035	80	130	348	35				
GTN19 L4	913	1123	913	913	2180	2480	2080	2080	80	130	315	35	60	105	313	28

GTN19 R

HS

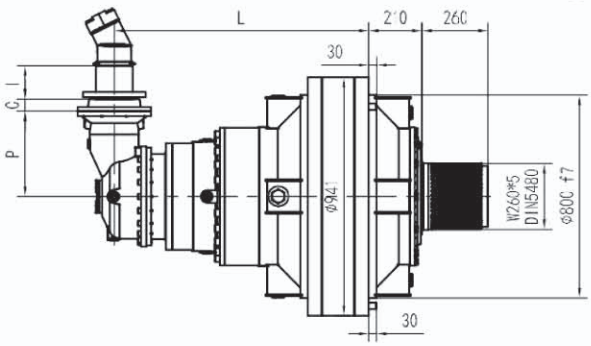

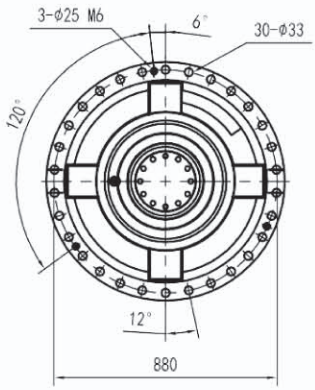

HK

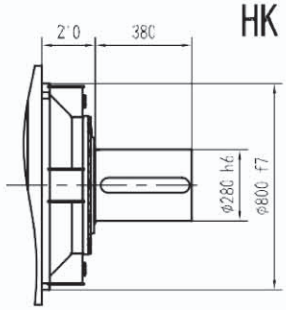

LSH

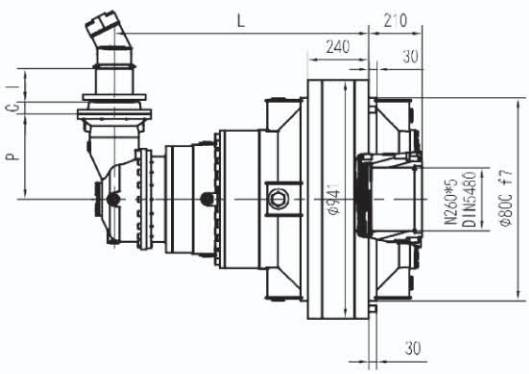

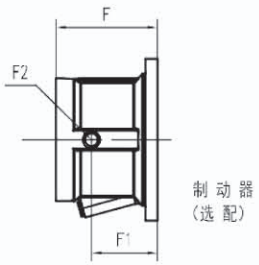

LP

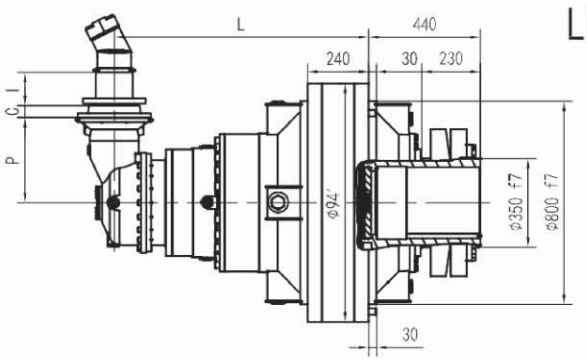

GTN19 R

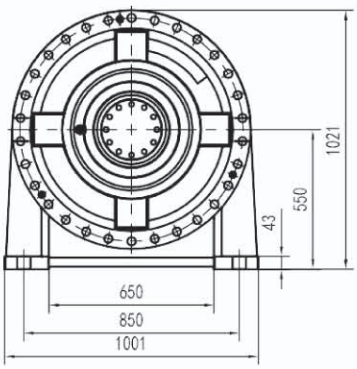

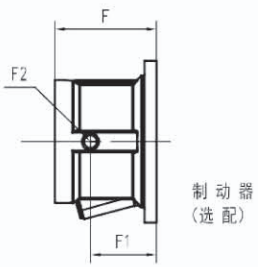

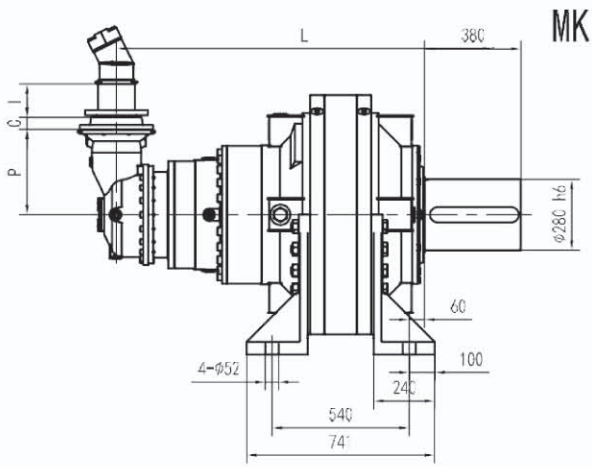

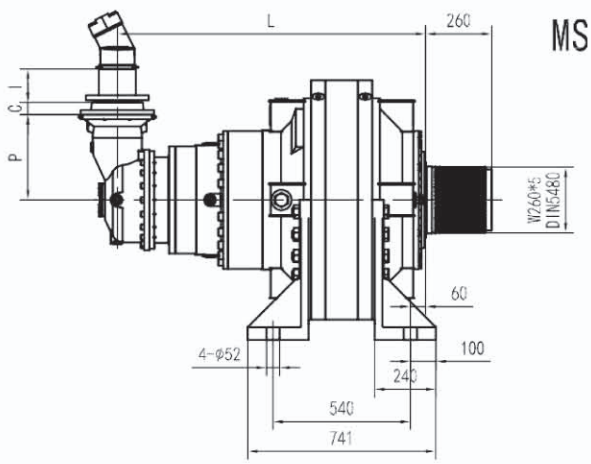

LP输出 LP VERSION	最大传动扭矩 MAX. TRANSMISSIBLE TORQUE	420000Nm

	L				P	Kg				C	输入 Input	I	F	F1	F2	类型 Type	输入 Input	Kn
	HS HK	MK MS	LSH	LP		HS HK	MK MS	LSH	LP									
GTN19 R4(B)	1005	1205	1005	1005	345	2260	2560	2160	2160	45	B	联系厂家	195	147	1/4G	6	B	28
GTN19 R4(C)	1005	1205	1005	1005	390	2280	2580	2180	2180	45	B		195	147	1/4G	6	B	28

GTN19 R

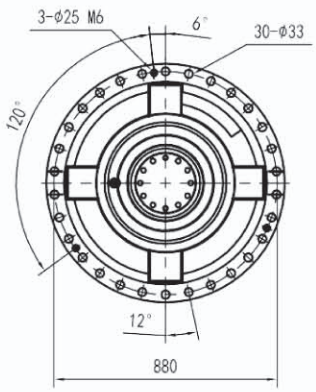
3-φ25 M6
6°
30-φ33
120°
12°
880

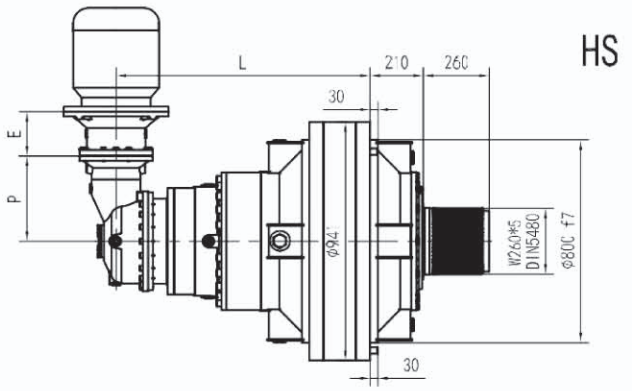
HS
L
210
260
30
E
P
φ94
W260*5
DIN5480
φ800 f7
30

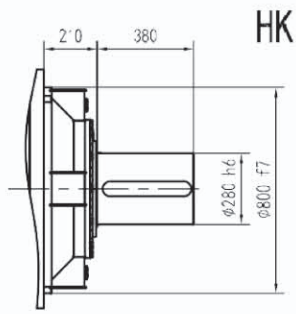
HK
210
380
φ280 h6
φ800 f7

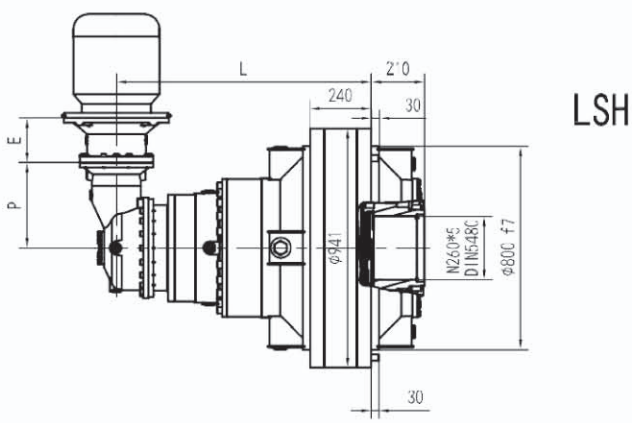
LSH
L
210
240
30
E
P
φ941
N260*5
DIN5480
φ800 f7
30

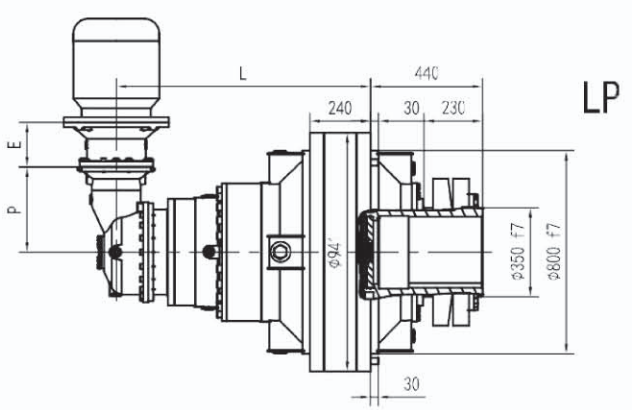
LP
L
440
240
30
230
E
P
φ94
φ350 f7
φ800 f7
30

GTN19 R

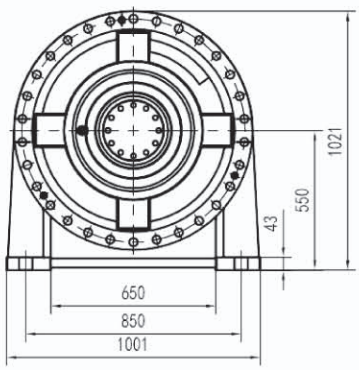

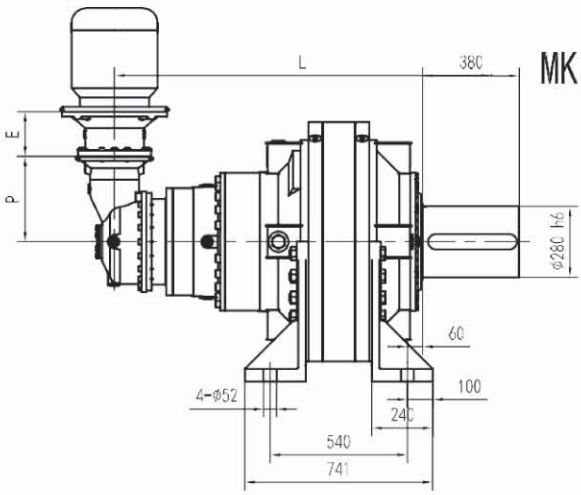

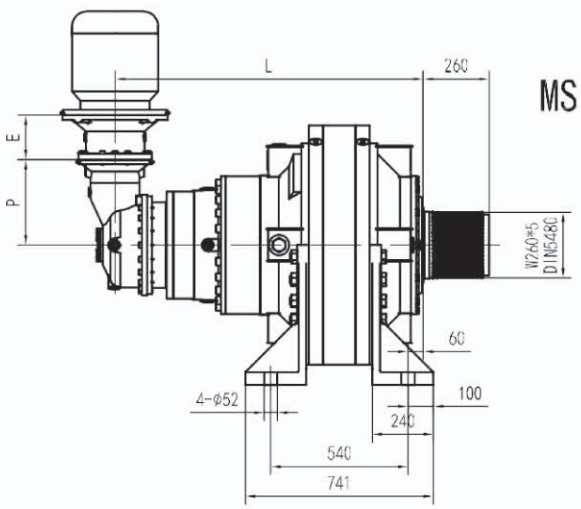

LP输出 LP VERSION	最大传动扭矩 MAX. TRANSMISSIBLE TORQUE	420000Nm

	L				P	Kg				E					
	HS HK	MK MS	LSH	LP		HS HK	MK MS	LSH	LP	IEC 132	IEC 160	IEC 180	IEC 200	IEC 225	IEC 250
GTN19 R4(B)	1005	1205	1005	1005	345	2260	2560	2160	2160			152	182	212	193
GTN19 R4(C)	1005	1205	1005	1005	390	2280	2580	2180	2180			152	182	212	193

GTN19 R

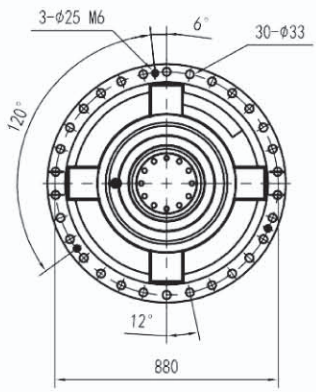

HS

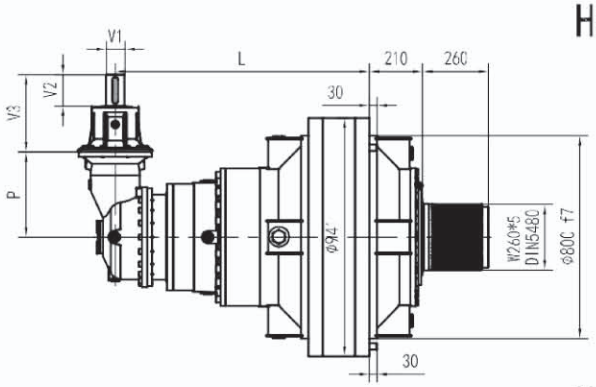

HK

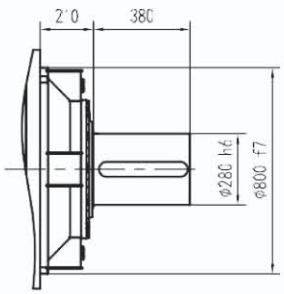

LSH

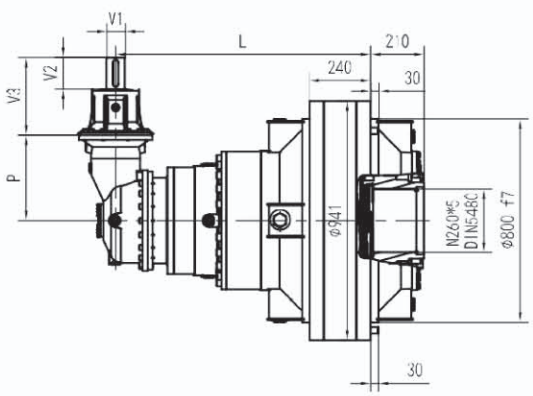

LP

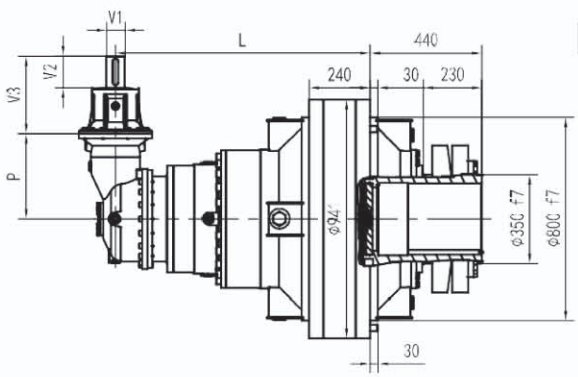

GTN19 R

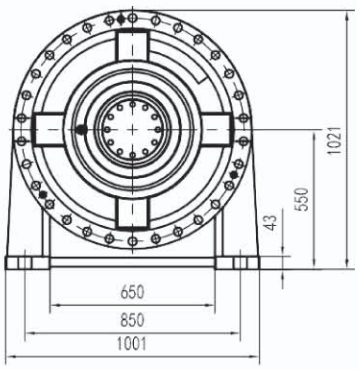

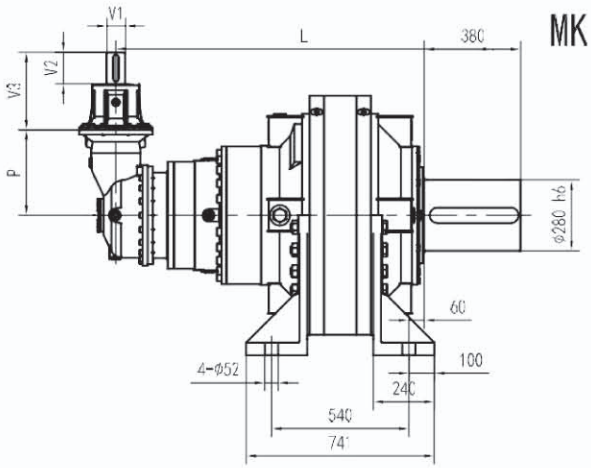

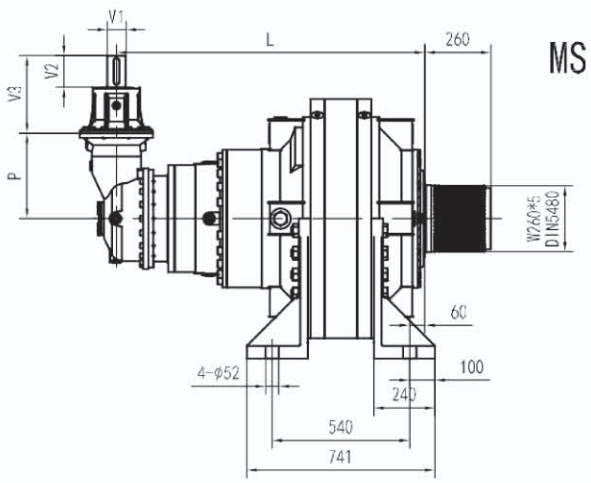

LP输出 LP VERSION	最大传动扭矩 MAX. TRANSMISSIBLE TORQUE	420000Nm

	L				P	Kg				V1	V2	V3	Kg	V1	V2	V3	Kg
	HS HK	MK MS	LSH	LP		HS HK	MK MS	LSH	LP								
GTN19 R4(B)	1005	1205	1005	1005	345	2260	2560	2160	2160	60	105	307	23				
GTN19 R4(C)	1005	1205	1005	1005	390	2280	2580	2180	2180	60	105	307	23				

GTN19 L - GTN19 R

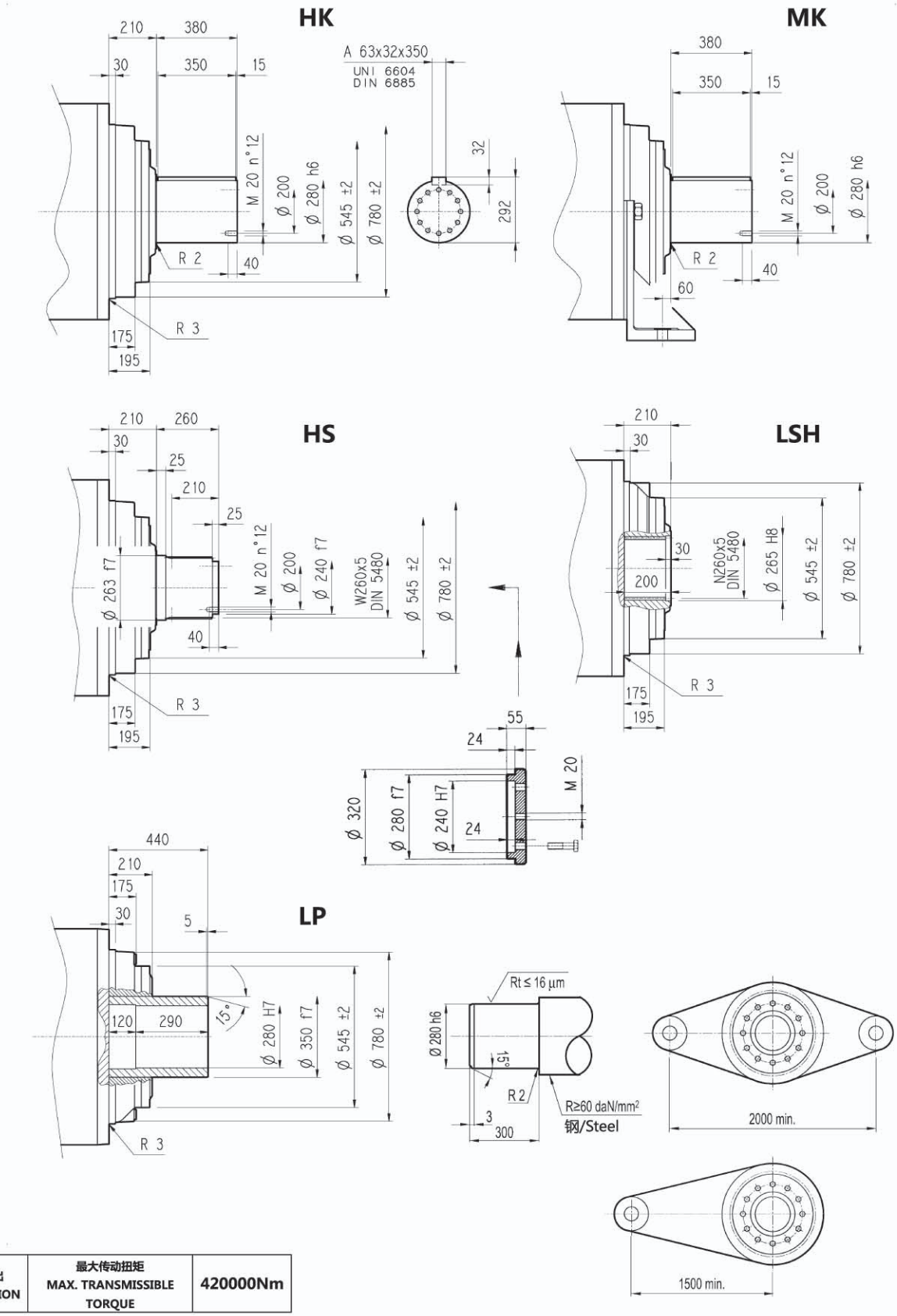

LP输出 LP VERSION	最大传动扭矩 MAX. TRANSMISSIBLE TORQUE	420000Nm

GTN19 L - GTN19 R

法兰/Flange

FOA

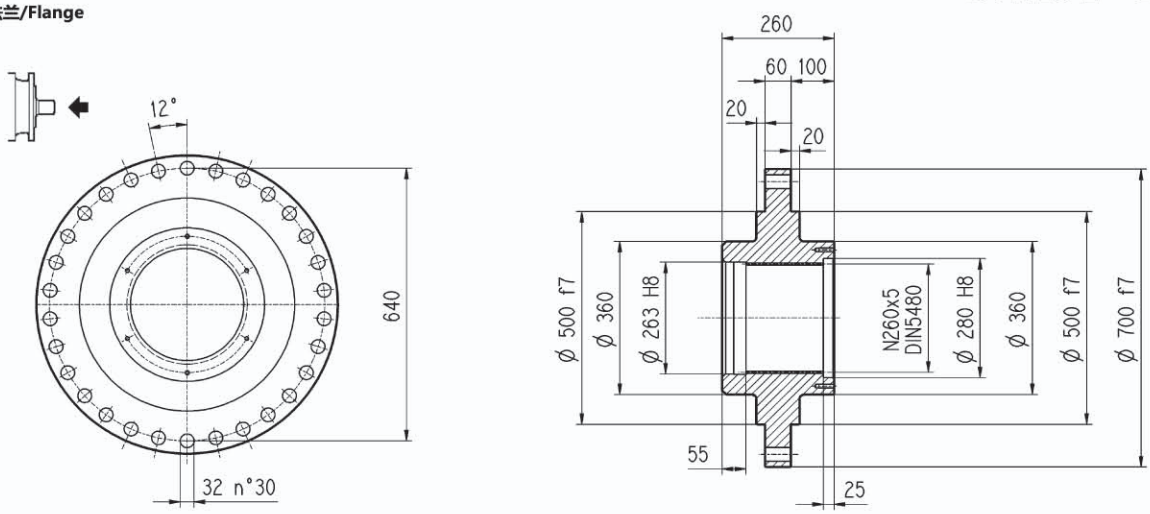

材料：C40
Material: Steel C40

套筒联轴器/Sleeve couplings

HOS

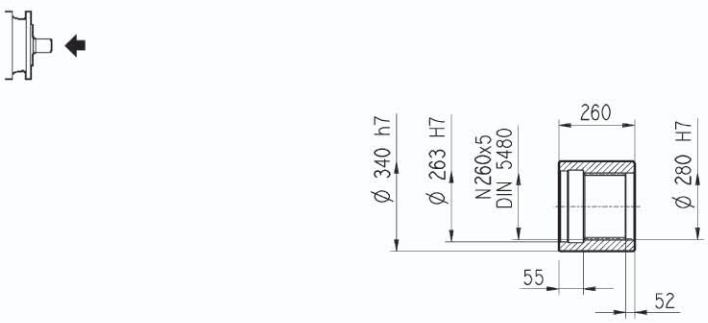

材料：16CrNi4
Material : Steel 16CrNi4

锁紧盘/Shrink disc

LOP

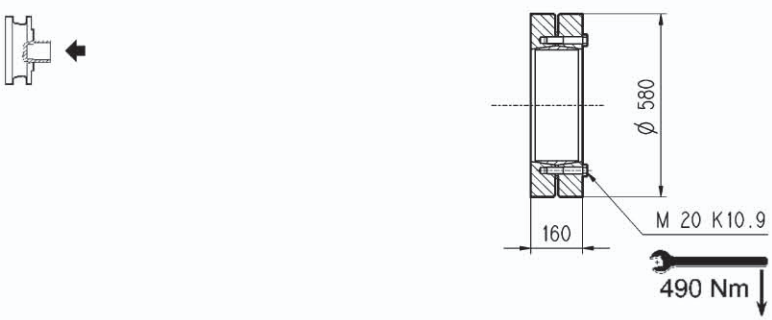

GTN19 L - GTN19 R

输入轴/Input shaft

S_ _

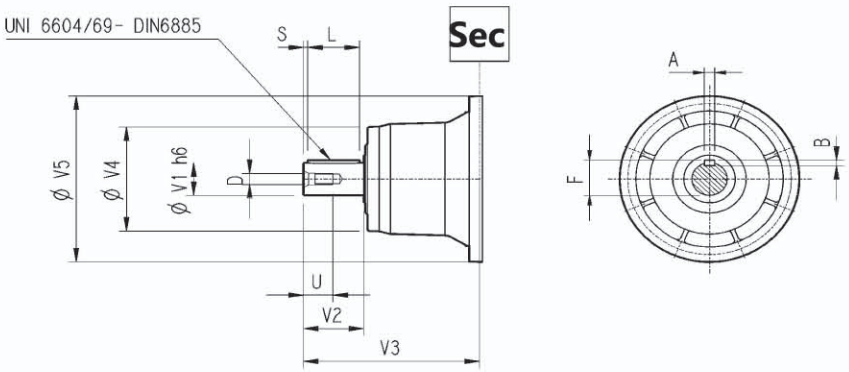

SV_ _

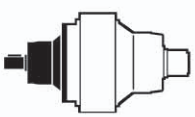

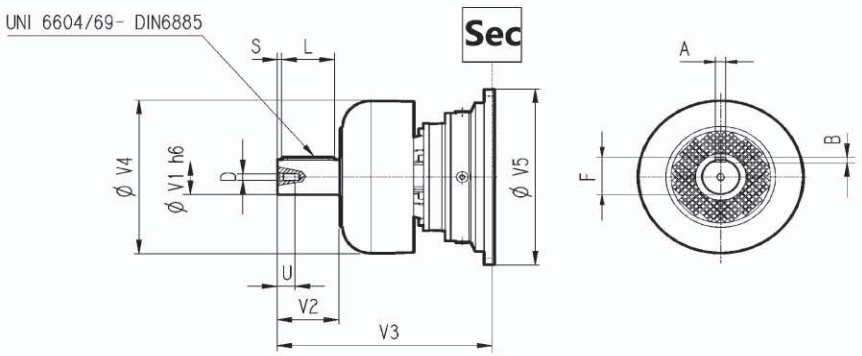

	CODE	V1	V2	V3	V4	V5	A	B	F	L	S	D	U
GTN19 L3	S11B	80	130	348	200	428	22	14	85	110	10	M16	36
	SV11B	80	130	456	347.5	428	22	14	85	110	10	M16	36
GTN19 L4	S07B	80	130	315	200	345	22	14	85	110	10	M16	36
	SV07B	80	130	375	347.5	348	22	14	85	110	10	M16	36
	S07A	60	105	313	155	345	18	11	64	90	7.5	M16	36
	SV07A	60	105	363	309	348	18	11	64	90	7.5	M16	36
GTN19 R4	S05B	48	82	239	155	245	14	9	51.5	70	6	M16	36
GTN19 R4 (B) (C)	S06B	60	105	307	155	292	18	11	64	90	7.5	M16	36
	SV06B	60	105	357	309	292	18	11	64	90	7.5	M16	36

无电机适配器输入尺寸
Input dimension without motor adaptor

S_ _

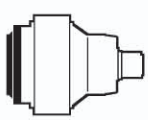

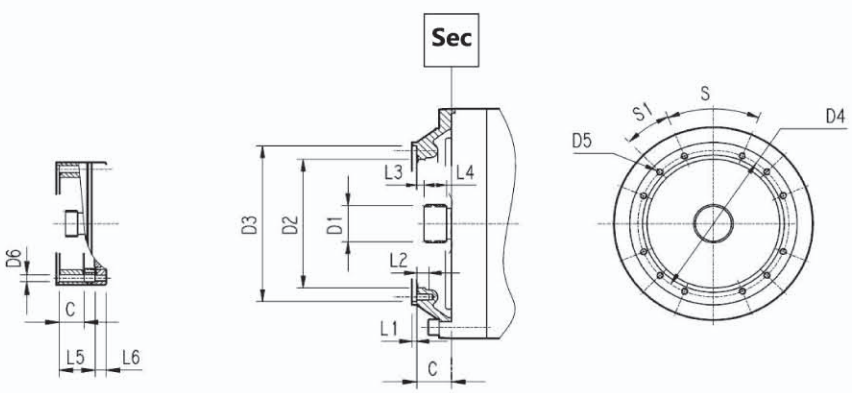

	CODE	C	D1	D2	D3	D4	D5	D6	L1	L2	L3	L4	L5	L6	S	S1	Input 输入
GTN19 L1	请咨询技术部／Please consult Technical Service																
GTN19 L2	S9AE	116	100x94 DIN 5482	340	412 H7	390	M16 n°18	/	7	30	8	55	/	/	20°	20°	E
GTN19 L3	S9AD	81	80x74 DIN 5482	270	335 H7	314	M16 n°8	/	5	30	8.5	40	/	/	60°	30°	D
GTN19 L4	S9AB	51	58x53 DIN 5482	195	236 H7	222	M10 n°12	/	4	18	11	22	/	/	45°	22.5°	B
GTN19 R4	S9AA	37	40x36 DIN 5482	140	178 H7	165	M12 n°8	11	4	18	9	18	/	/	45°	45°	A
GTN19 R4 (B) (C)	S9AB	45	58x53 DIN 5482	195	236 H7	222	M10 n°12	/	4	18	11	22	/	/	45°	22.5°	B

GTN19 L - GTN19 R

Fh_2输出轴允许的径向和轴向载荷
$n_2 \cdot h = 10000$

Permissible radial and axial loadson output shaft with Fh_2
$n_2 \cdot h = 10000$

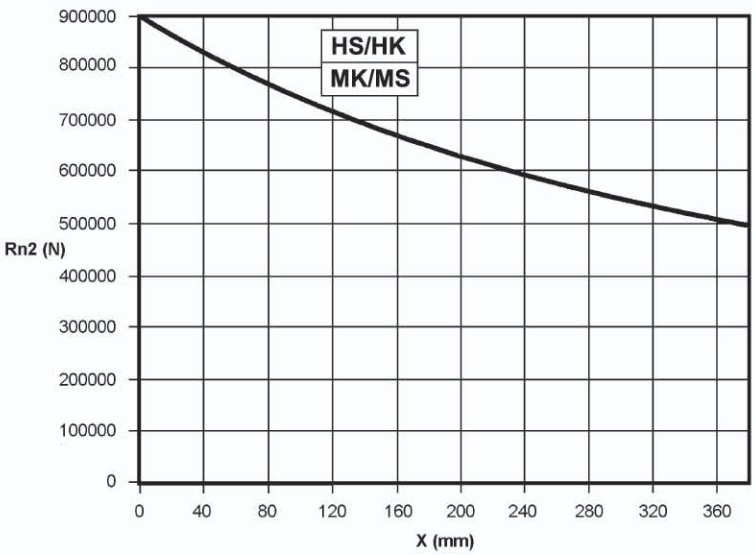

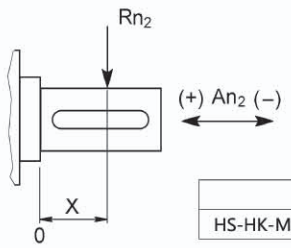

	An2 (+)	An2 (-)
HS-HK-MK-MS	500000	450000

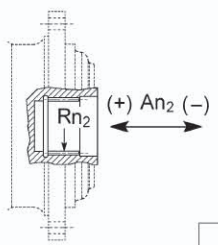

	Rn2	An2 (+/-)
LSH	200000	200000

轴上的载荷修正系数 fh_2 Load corrective factor fh_2 on shafts	$Fh_2 = n_2 \cdot h$		10000	25000	50000	100000	500000	1000000
	fh_2	LSH	1	0.74	0.58	0.46	0.27	0.21
		HS- HK- MK- MS	1	0.76	0.61	0.50	0.31	0.25

Fh_1输入轴允许的径向和轴向载荷
$n_1 \cdot h = 250000$

Permissible radial loads on inputshaft with Fh_1 : $n_1 \cdot h = 250000$

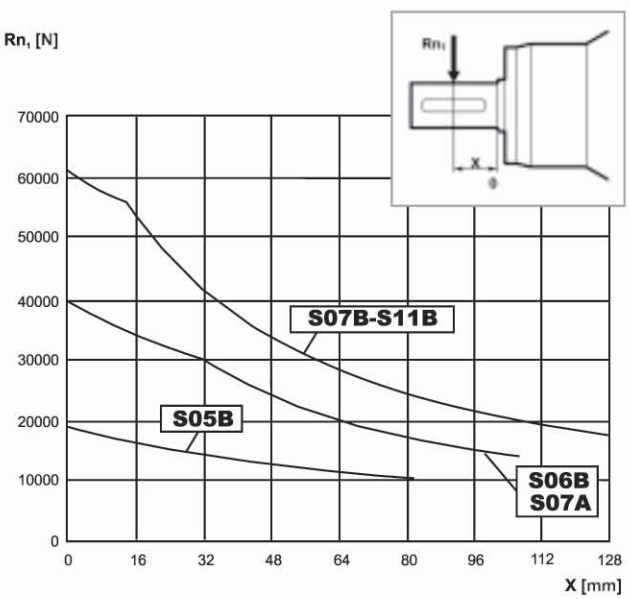

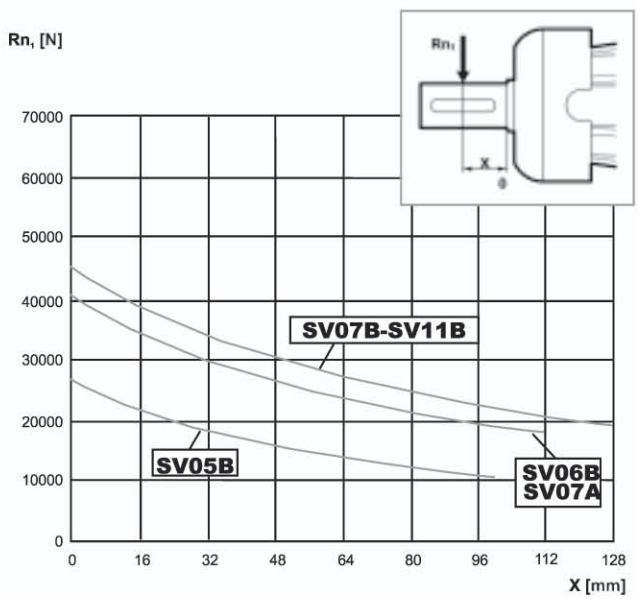

轴上的载荷修正系数fh_1 Load corrective factor fh_1 on shafts	$Fh_1 = n_1 \cdot h$	250000	500000	1000000	2000000	5000000	10000000
	fh_1	1	0.79	0.63	0.50	0.37	0.29

GTN21 L

HS

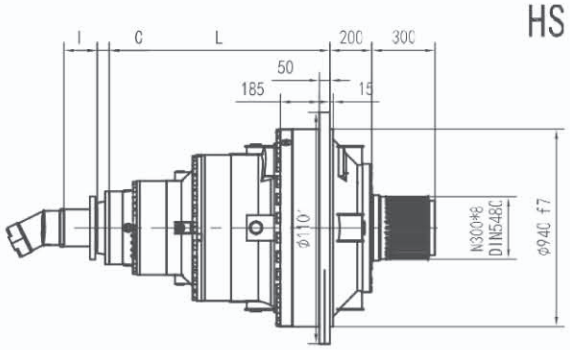

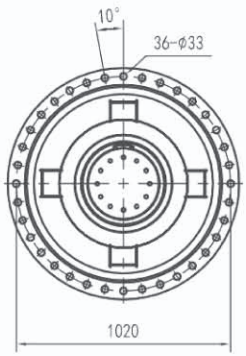

HK

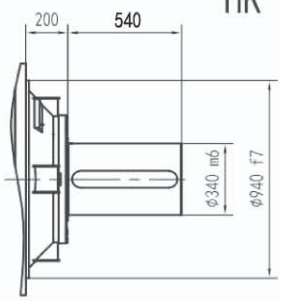

LSH

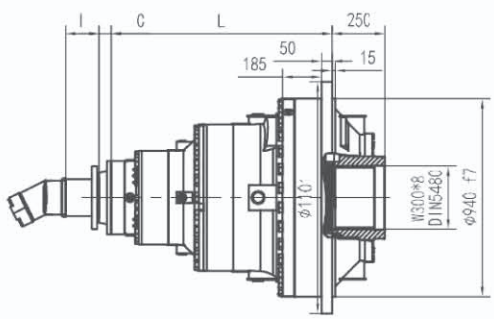

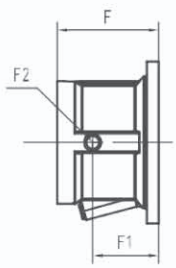

制动器
(选配)

LP

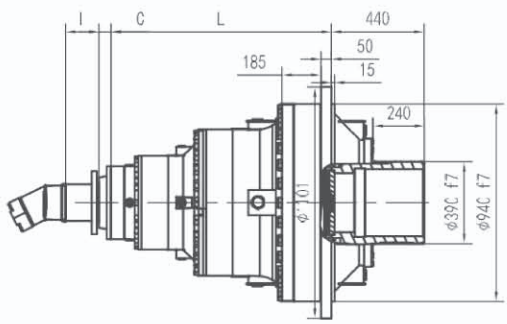

GTN21 L

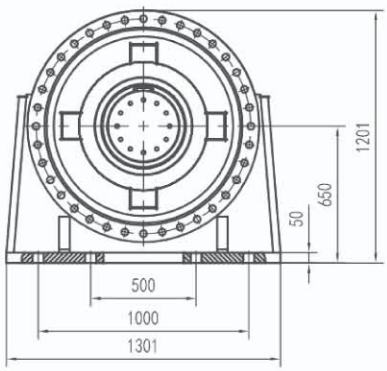

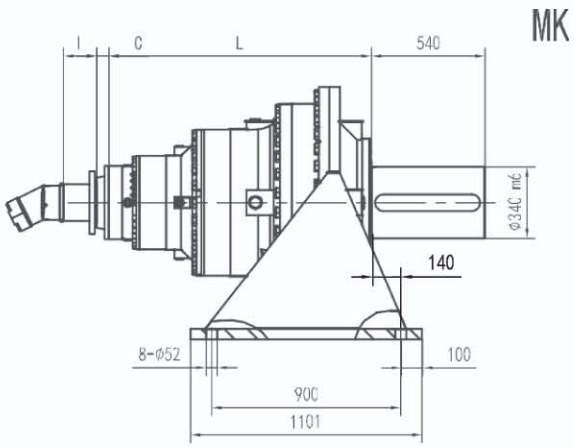

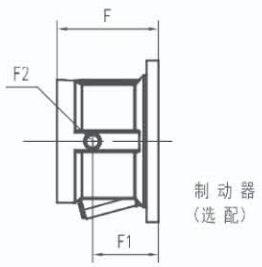

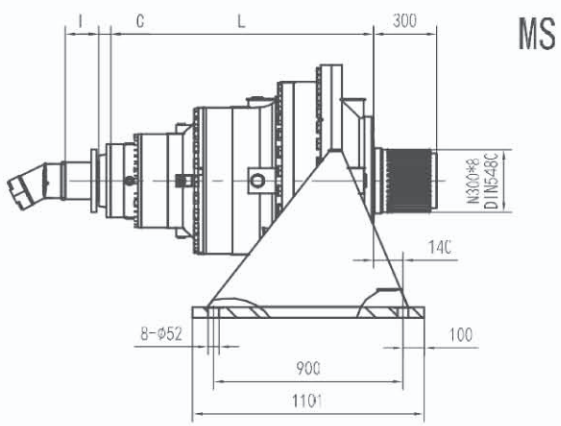

LP 输出 LP VERSION	最大输出扭矩 MAX. TRANSMISSIBLE TORQUE	648000 Nm

	L				Kg												
	HS HK	MK MS	LSH	LP	HS HK	MK MS	LSH	LP	C	输入 Input	I	F	F1	F2	类型 Type	输入 Input	Kg
GTN21 L1											联系厂家						
GTN21 L2	595	795	595	595	2700	3000	2600	2600	181	F							
GTN21 L3	904	1104	904	904	2820	3120	2720	2720	75	D							
GTN21 L4	1053	1253	1053	1053	2880	3180	2780	2780	51	B		201	153	1/4 G	6	B	28

GTN21 L

HS

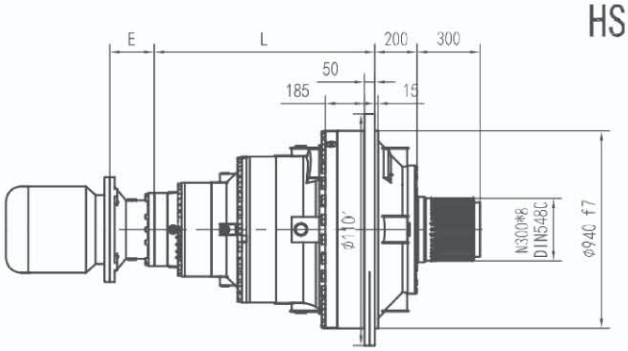

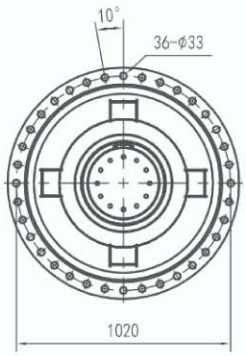

HK

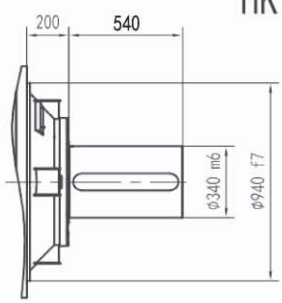

LSH

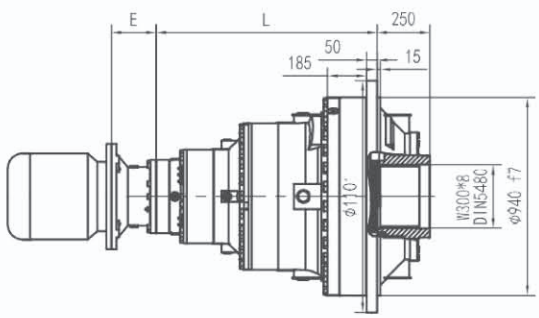

LP

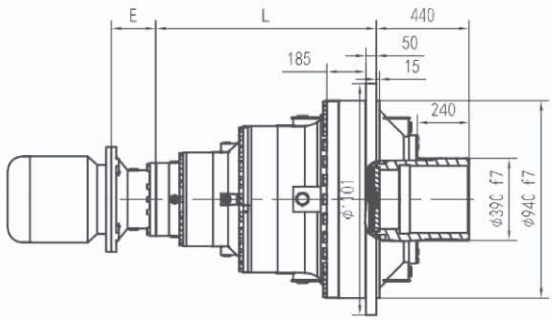

GTN21 L

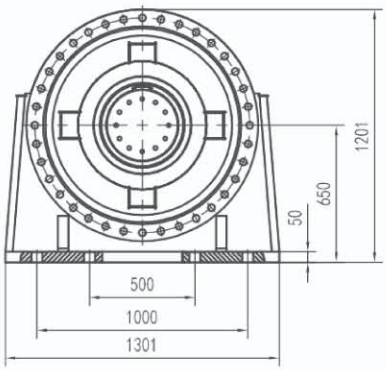

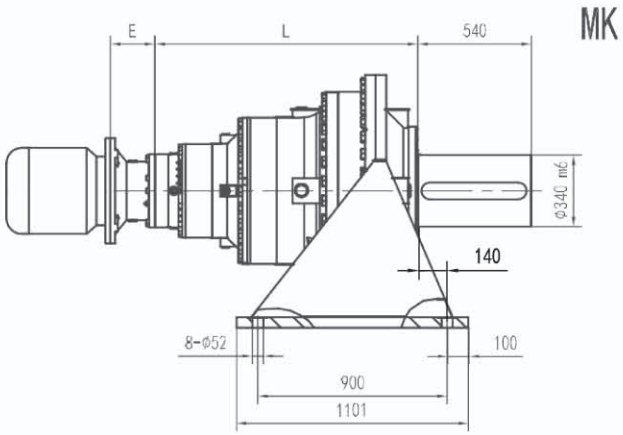

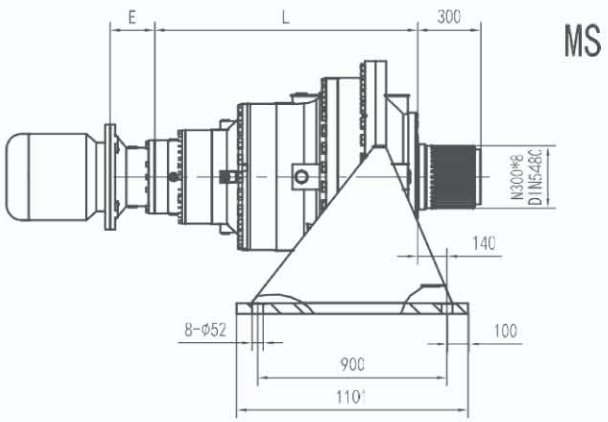

LP 输出 LP VERSION	最大输出扭矩 MAX. TRANSMISSIBLE TORQUE	648000 Nm

	L				Kg				E			
	HS HK	MK MS	LSH	LP	HS HK	MK MS	LSH	LP	IEC 180	IEC 200	IEC 225	IEC 250
GTN21 L1												
GTN21 L2	595	795	595	595	2700	3000	2600	2600				
GTN21 L3	904	1104	904	904	2820	3120	2720	2720				
GTN21 L4	1053	1253	1053	1053	2880	3180	2780	2780	195	186	216	215

GTN21 L

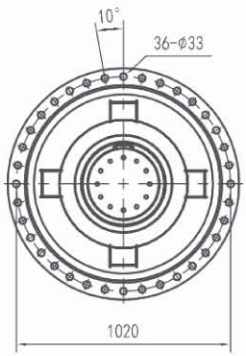

HS

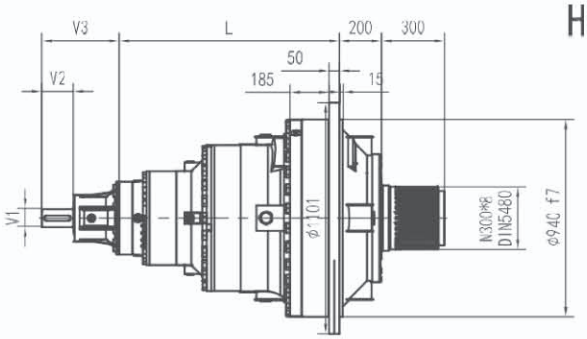

HK

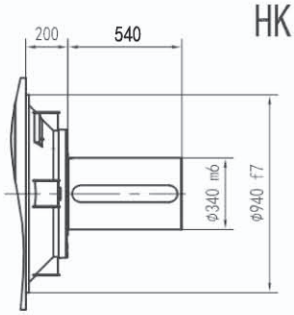

LSH

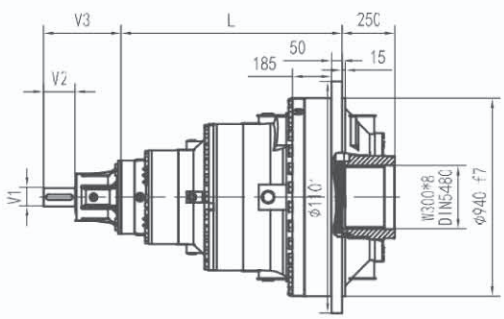

LP

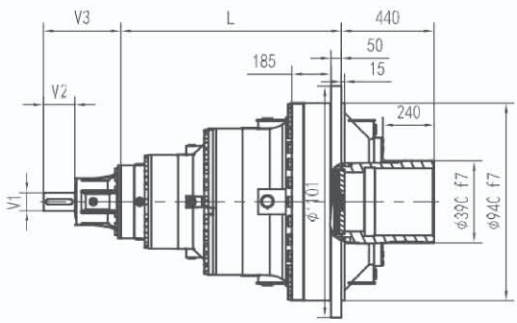

GTN21 L

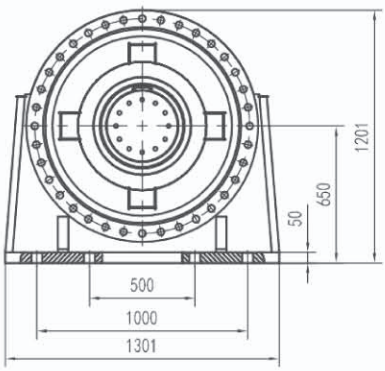

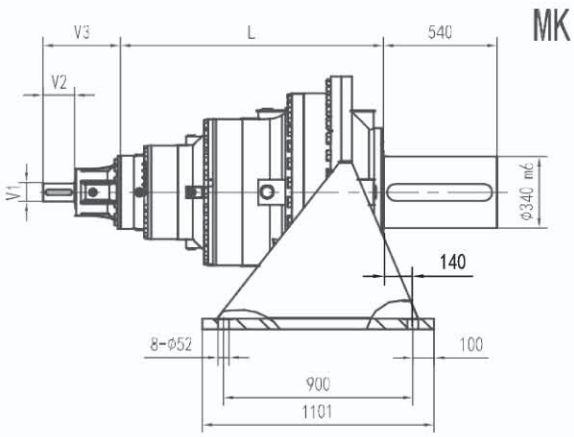

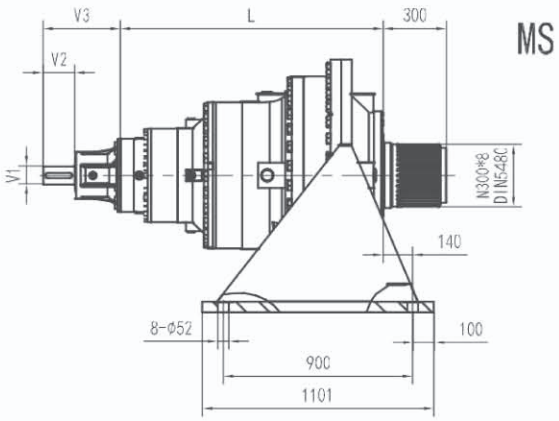

LP 输出 LP VERSION	最大输出扭矩 MAX. TRANSMISSIBLE TORQUE	648000 Nm

	L				Kg				V1	V2	V3	Kg	V1	V2	V3	Kg
	HS HK	MK MS	LSH	LP	HS HK	MK MS	LSH	LP								
GTN21 L1																
GTN21 L2	595	795	595	595	2700	3000	2600	2600								
GTN21 L3	904	1104	904	904	2820	3120	2720	2720	80	130	343	35				
GTN21 L4	1053	1253	1053	1053	2880	3180	2780	2780	80	130	315	35	60	105	313	28

GTN21 R

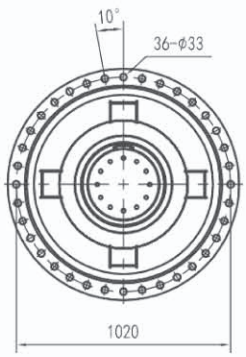
10°
36-Φ33
1020

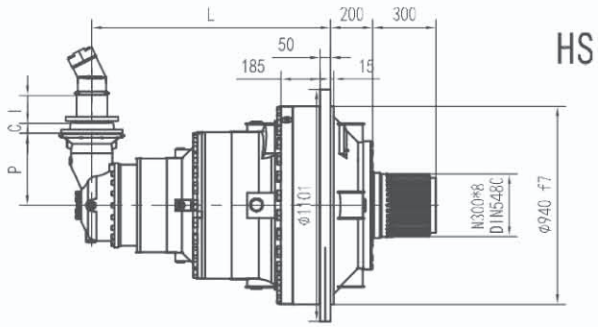
HS
L
200
300
50
185
15
C
P
Φ1101
N300*8
DIN5480
Φ940 f7

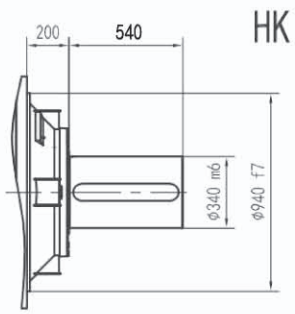
HK
200
540
Φ340 m6
Φ940 f7

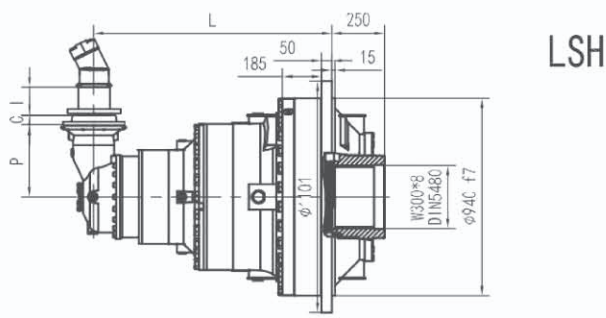
LSH
L
250
50
185
15
C
P
Φ1101
W300*8
DIN5480
Φ940 f7

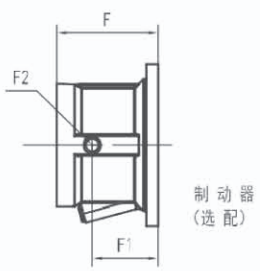
F
F2
F1
制 动 器
(选 配)

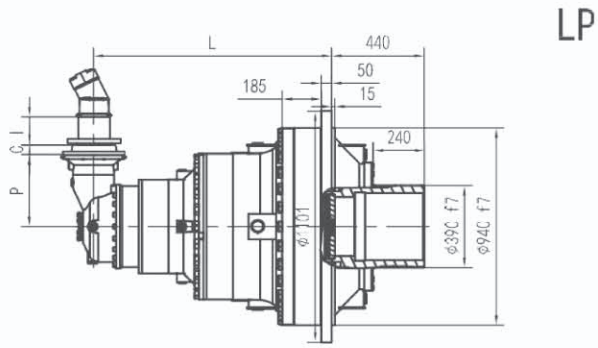
LP
L
440
50
185
15
240
C
P
Φ1101
Φ390 f7
Φ940 f7

GTN21 R

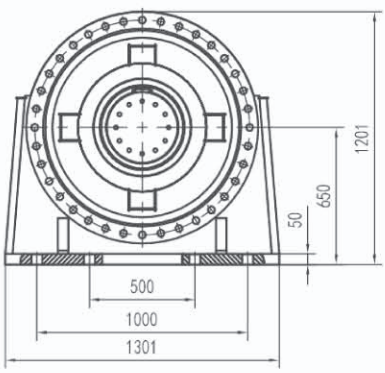

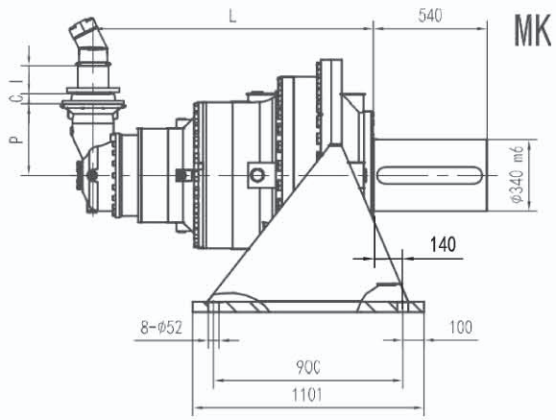

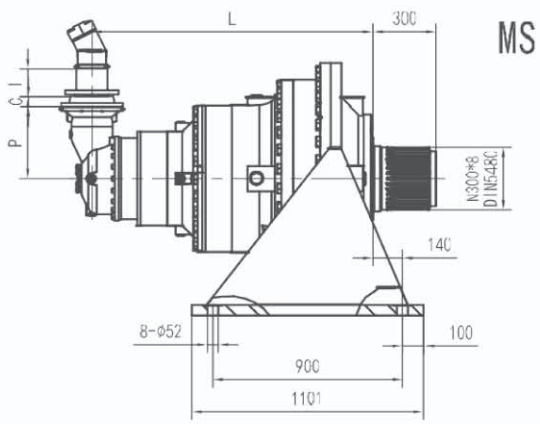

LP 输出 LP VERSION	最大输出扭矩 MAX. TRANSMISSIBLE TORQUE	648000 Nm

	L				P					C	输入 Input	I	F	F1	F2	类型 Type	输入 Input	
	HS HK	MK MS	LSH	LP		HS HK	MK MS	LSH	LP									
GTN21 R4(B)	1134	1334	1134	1134	345	2950	3250	2850	2850	45	B	联系厂家	195	147	1/4G	6	B	28
GTN21 R4(C)	1134	1334	1134	1134	390	2960	3260	2860	2860	45	B		195	147	1/4G	6	B	28

GTN21 R

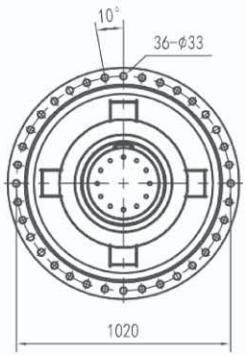

HS

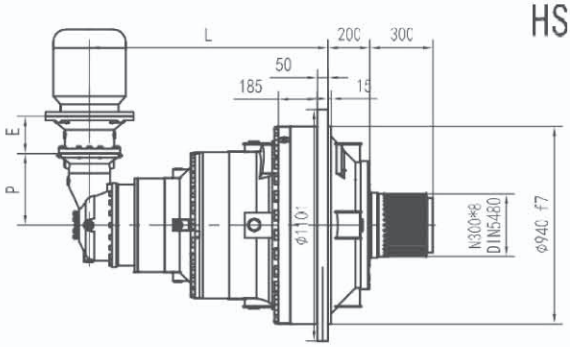

HK

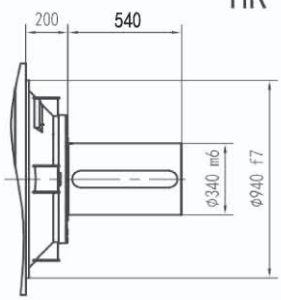

LSH

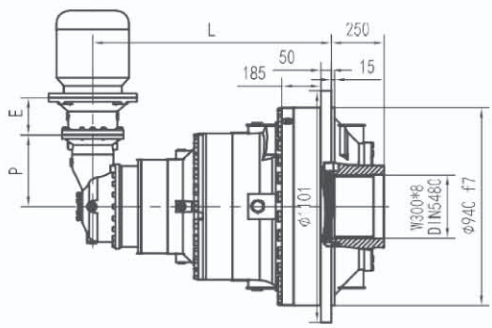

LP

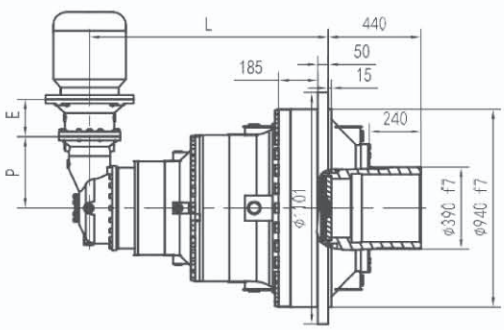

GTN21 R

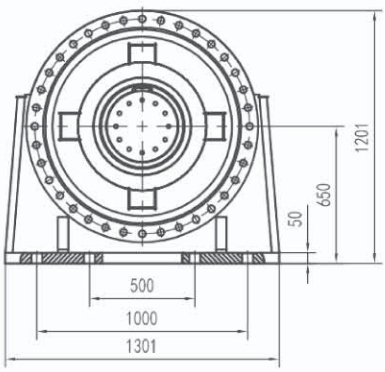

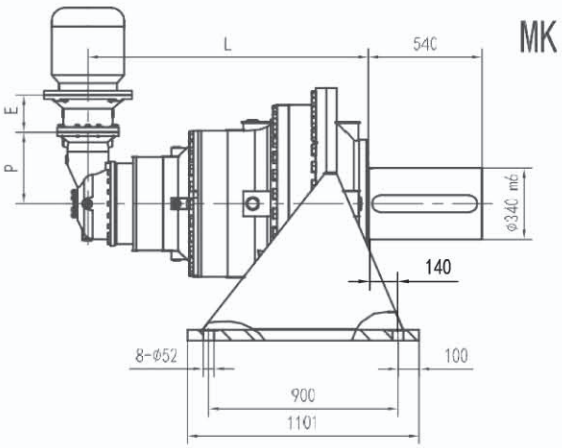

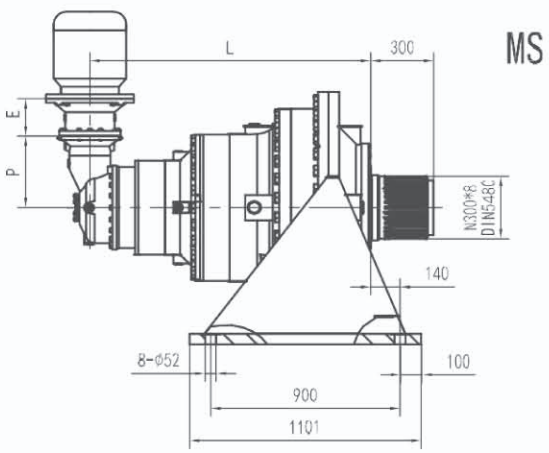

LP 输出 LP VERSION	最大输出扭矩 MAX. TRANSMISSIBLE TORQUE	648000 Nm

	L				P	Kg				E					
	HS HK	MK MS	LSH	LP		HS HK	MK MS	LSH	LP	IEC 132	IEC 160	IEC 180	IEC 200	IEC 225	IEC 250
GTN21 R4(B)	1134	1334	1134	1134	345	2950	3250	2850	2850			152	182	212	193
GTN21 R4(C)	1134	1334	1134	1134	390	2960	3260	2860	2860			152	182	212	193

GTN21 R

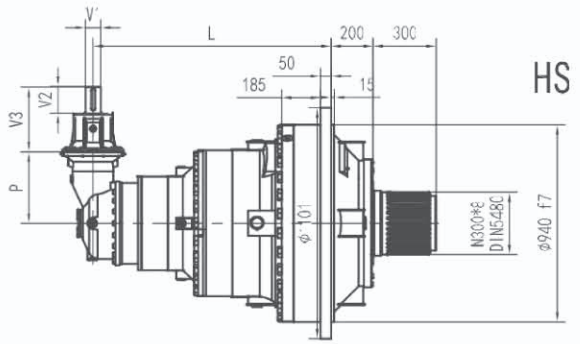
V1
L
200
300
50
185
15
V3
V2
P
HS
Φ101
IW300*8
DIN5480
Φ940 f7

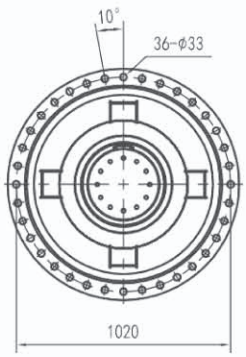
10°
36-Φ33
1020

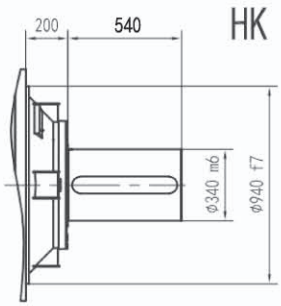
200
540
HK
Φ340 m6
Φ940 f7

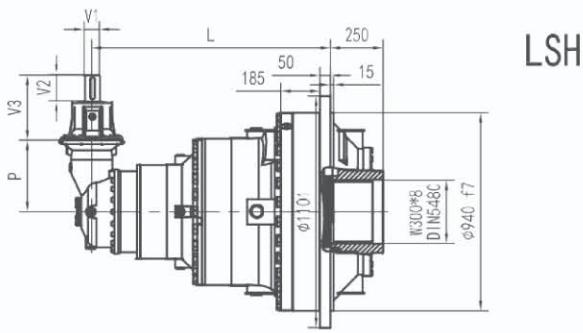
V1
L
250
50
185
15
V3
V2
P
LSH
Φ110
IW300*8
DIN5480
Φ940 f7

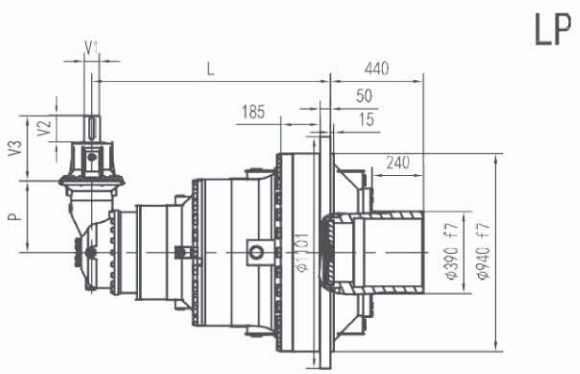
V1
L
440
50
185
15
V3
V2
P
LP
240
Φ101
Φ390 f7
Φ940 f7

GTN21 R

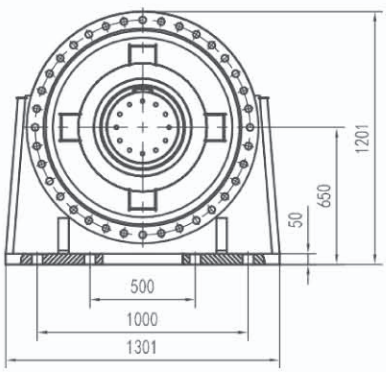

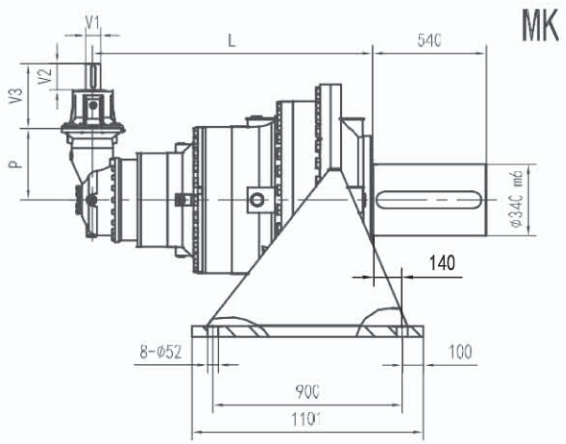

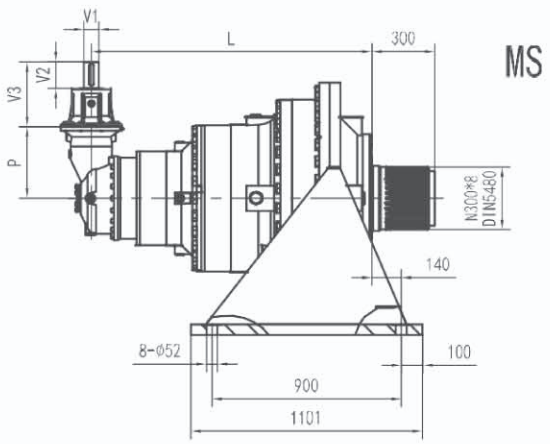

LP 输出 LP VERSION	最大输出扭矩 MAX. TRANSMISSIBLE TORQUE	648000 Nm

	L				P	Kg				V1	V2	V3	Kg	V1	V2	V3	Kg
	HS HK	MK MS	LSH	LP		HS HK	MK MS	LSH	LP								
GTN21 R4(B)	1134	1334	1134	1134	345	2950	3250	2850	2850	60	105	307	23				
GTN21 R4(C)	1134	1334	1134	1134	390	2960	3260	2860	2860	60	105	307	23				

GTN21 L - GTN21 R

HK

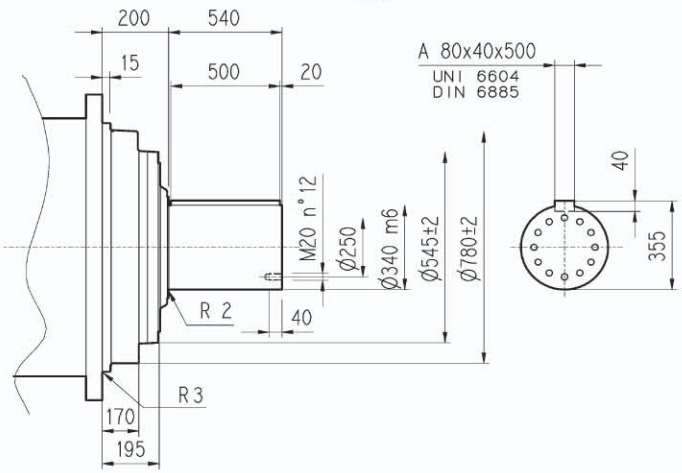

MK

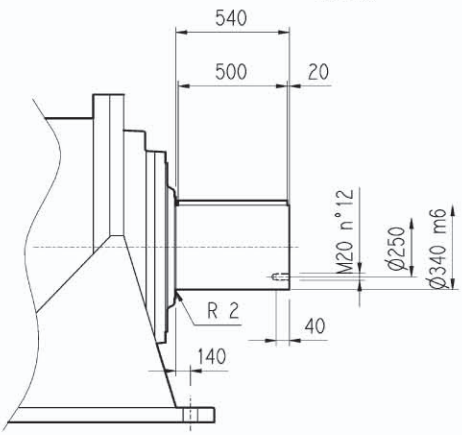

HS

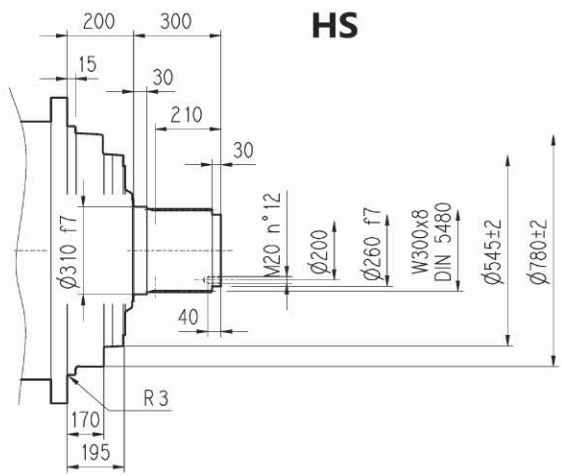

LSH

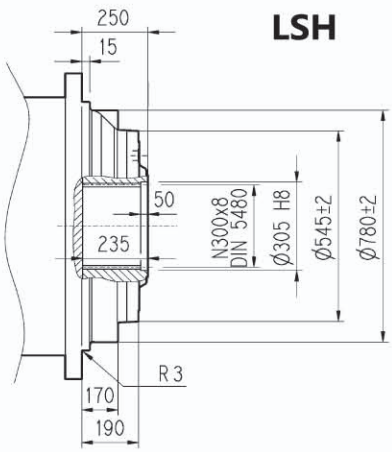

LP

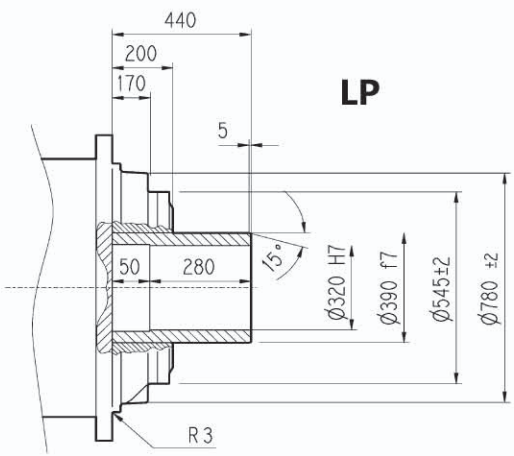

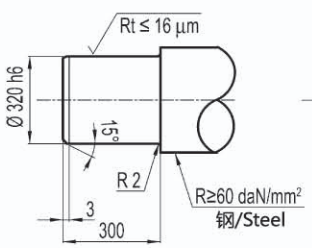

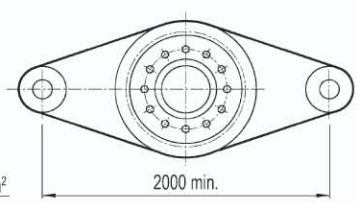

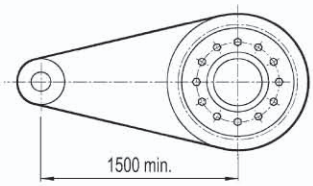

LP 输出 LP VERSION	最大输出扭矩 MAX. TRANSMISSIBLE TORQUE	648000 Nm

GTN21 L - GTN21 R

法兰/Flange

FOA



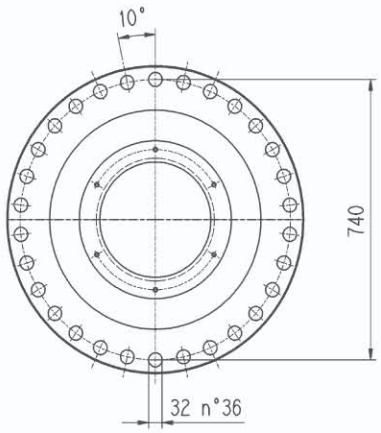

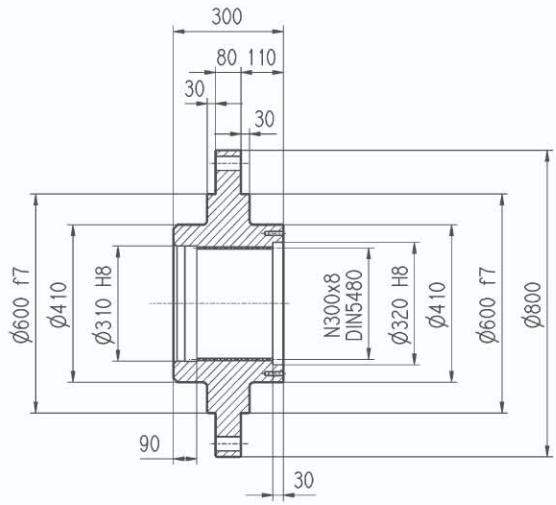

材料：C40
Material : Steel C40

锁紧盘/Shrink disc

LOP



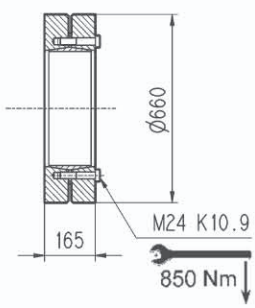

GTN21 L - GTN21 R

输入轴/Input shaft

S _ _

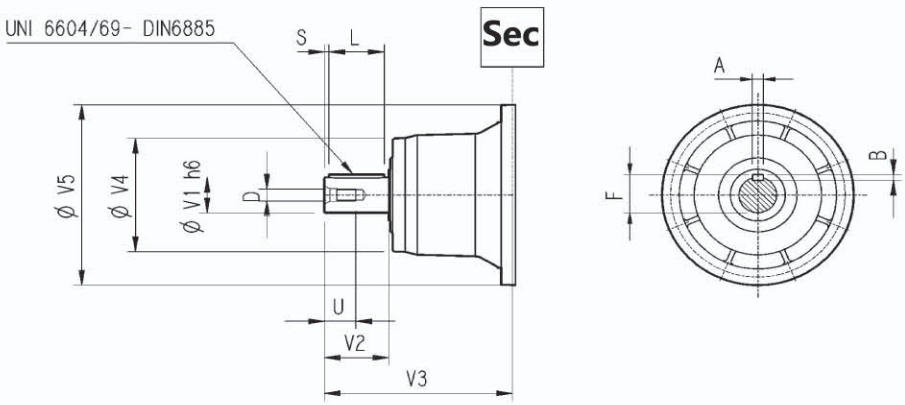

SV_ _

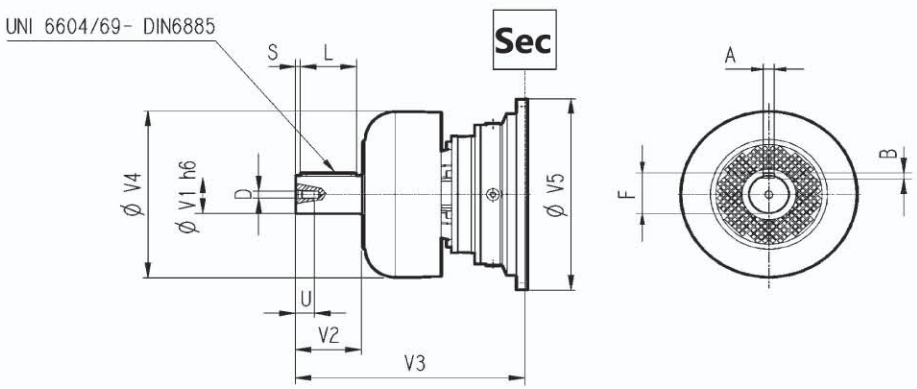

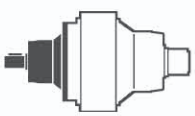

	CODE	V1	V2	V3	V4	V5	A	B	F	L	S	D	U
GTN21 L3	S11B	80	130	343	200	445	22	14	85	110	10	M16	36
	SV11B	80	130	451	347.5	445	22	14	85	110	10	M16	36
GTN21 L4	S07B	80	130	315	200	345	22	14	85	110	10	M16	36
	SV07B	80	130	375	347.5	348	22	14	85	110	10	M16	36
	S07A	60	105	313	155	345	18	11	64	90	7.5	M16	36
	SV07A	60	105	363	309	348	18	11	64	90	7.5	M16	36
GTN21 R4 (B) (C)	S06B	60	105	307	155	292	18	11	64	90	7.5	M16	36
	SV06B	60	105	307	155	292	18	11	64	90	7.5	M16	36

无电机适配器输入尺寸
Input dimension without motor adaptor

S_ _

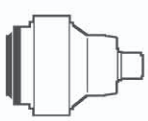

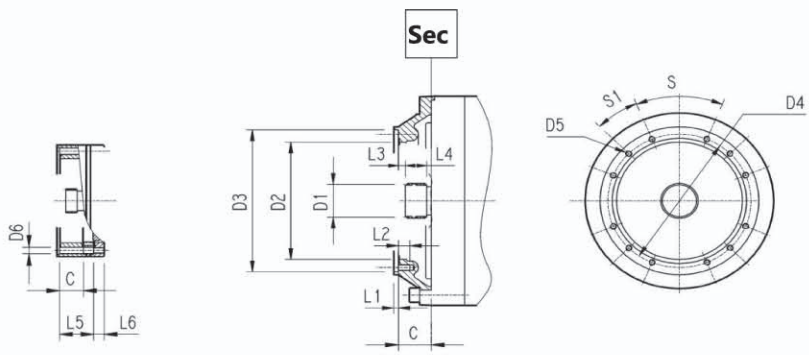

	CODE	C	D1	D2	D3	D4	D5	D6	L1	L2	L3	L4	L5	L6	S	S1	Input 输入
GTN21 L1	请咨询技术部 / Please consult Technical Service																
GTN21 L2	S9AF	181	120x3 DIN 5480	365	390 f7	415	M16 n°18	/	4	30	3	65	/	/	20°	20°	F
GTN21 L3	S9AD	75	80x74 DIN 5482	270	335 H7	314	M16 n°8	/	5	30	9.5	40	/	/	60°	30°	D
GTN21 L4	S9AB	51	58x53 DIN 5482	195	236 H7	222	M10 n°12	/	4	18	11	22	/	/	45°	22.5°	B
GTN21 R4 (B) (C)	S9AB	45	58x53 DIN 5482	195	236 H7	222	M10 n°12	/	4	18	11	22	/	/	45°	22.5°	B

GTN21 L - GTN21 R

Fh_2 输出轴允许的径向和轴向载荷
$n_2 \cdot h = 10000$

Permissible radial and axial loadson output shaft with Fh_2
$n_2 \cdot h = 10000$

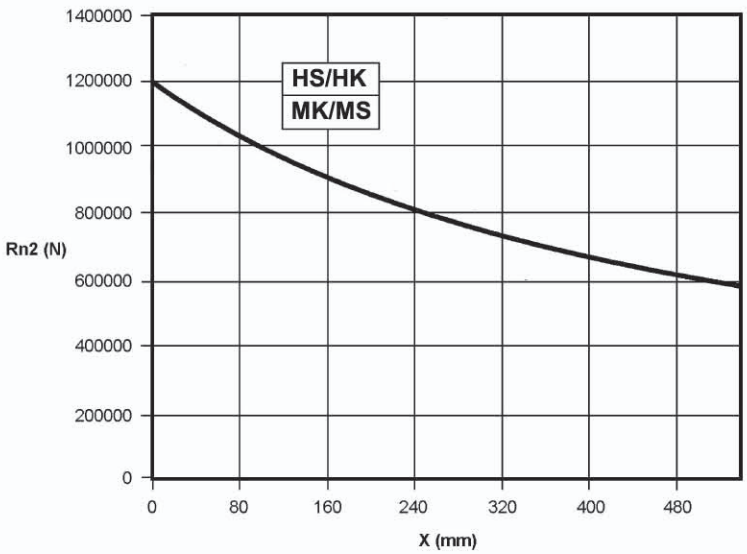

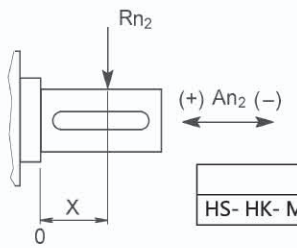

	An2 (+)	An2 (-)
HS- HK- MK- MS		

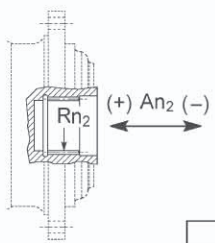

	Rn2	An2 (+/-)
LSH	1200000	180000

轴上的载荷修正系数 fh_2 Load corrective factor fh_2 on shafts	$Fh_2 = n_2 \cdot h$		10000	25000	50000	100000	500000	1000000
	fh_2	LSH	1	0.74	0.58	0.46	0.27	0.21
		HS- HK- MK- MS	1	0.76	0.61	0.50	0.31	0.25

Fh_1 输入轴允许的径向和轴向载荷
$n_1 \cdot h = 250000$

Permissible radial loads on inputshaft with $Fh_1 : n_1 \cdot h = 250000$

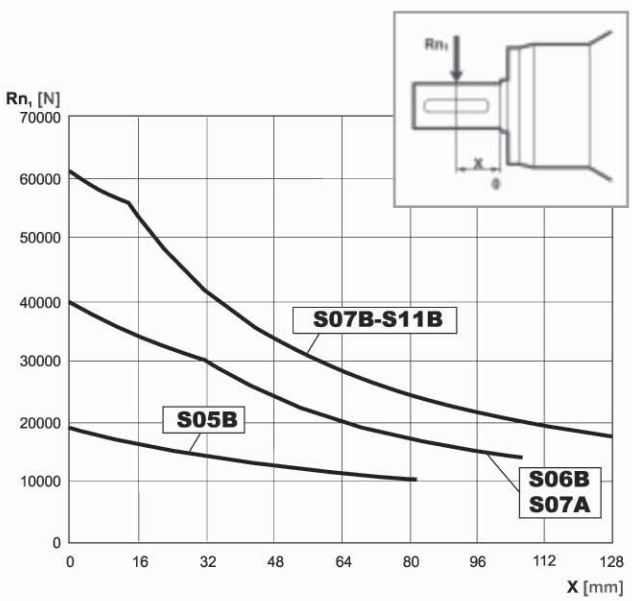

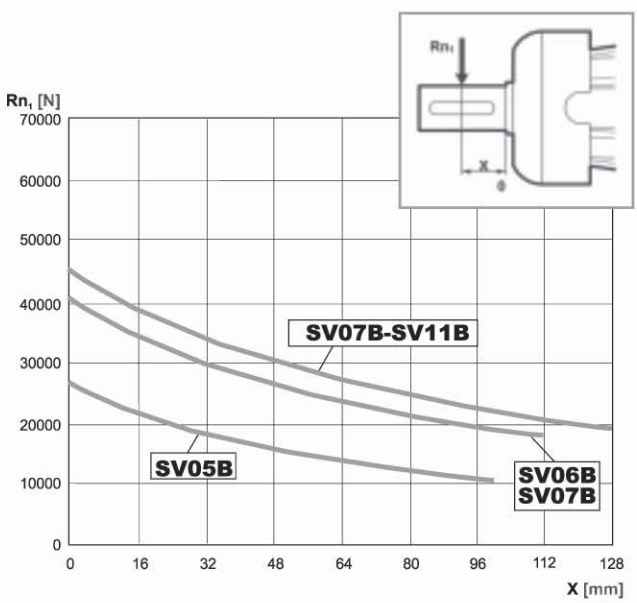

轴上的载荷修正系数fh_1 Load corrective factor fh_1 on shafts	$Fh_1 = n_1 \cdot h$	250000	500000	1000000	2000000	5000000	10000000
	fh_1	1	0.79	0.63	0.50	0.37	0.29